| Model | Year | MG | SG | Illustration | Restrictions | UPD | 18:03 | 30.07.2008 |
|---|---|---|---|---|---|---|---|---|
| 986 | 2004 | 0 | 01 | 001-00 | | 229 | | |

PORSCHE PET PORSCHE

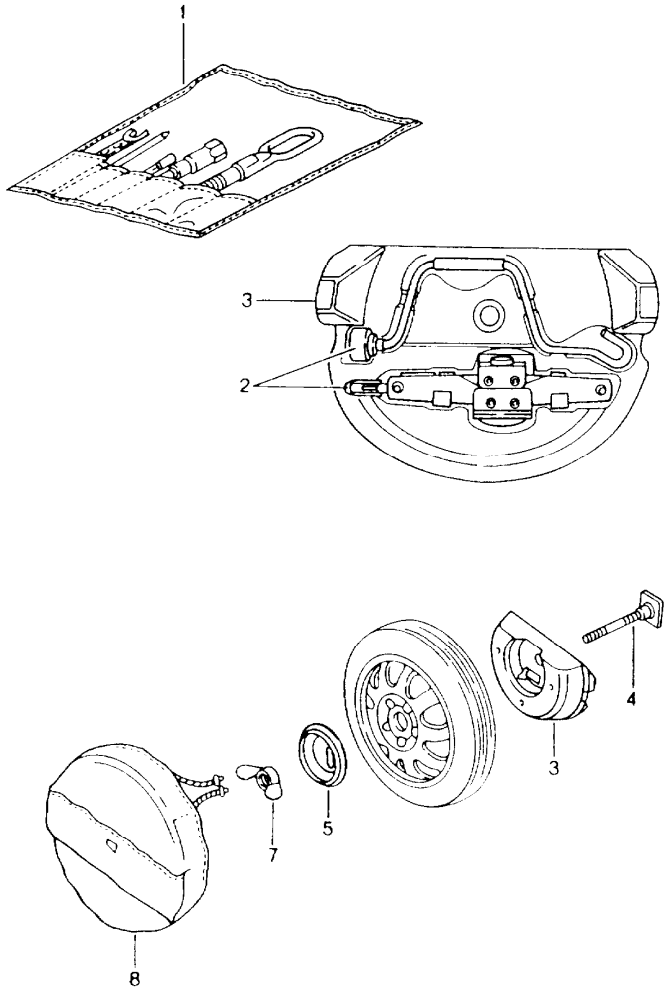


| Pos | Part Number | Description | Remark | Qty | Model |
|---|---|---|---|---|---|
| | | tool<br>jack | | | |
| 1 | 996 721 115 00 | tool bag<br>with contents<br>comprising: | | 1 | |
| - | 996 721 415 00 | tool bag<br>without<br>content | | 1 | |
| - | 996 361 521 00 | boot<br>for<br>tyre | | 1 | |
| - | 999 914 001 40 | plastic gloves | | 1 | |
| - | 996 721 151 00 | towing lug | | 1 | |
| - | 477 012 229 | double-end spanner<br>10 X 13 | | 1 | |
| - | 477 012 231 | screwdriver | | 1 | |
| - | 111 012 287 | handle<br>for<br>screwdriver | | 1 | |
| - | 999 571 076 02 | socket wrench<br>- 5 -<br>for<br>headlamp | | 1 | |
| - | 999 571 074 30 | threaded bolt<br>for<br>assembly<br>wheels | | 1 | |
| - | 477 012 221 A | rim wrench | | 1 | |
| - | 999 571 070 30 | operating rod<br>for<br>rim wrench | | 1 | |
| 2 | 996 721 211 00 | scissors type jack | | 1 | |
| 3 | 996 722 101 00 | foam part | | 1 | |
| 4 | 996 721 701 00 | fastening part | | 1 | |
| 5 | 477 813 157 | fastening plate | | 1 | |
| 7 | 900 029 004 02 | winged nut<br>M 10 | | 1 | |

| Pos | Part Number | Description | Remark | Qty | Model |
|---|---|---|---|---|---|
| 8 | - | see group 8/07/00 POS.19 | | 1 | |
| - | 000 722 722 02 | warning triangle | | 1 | |
| - | 993 722 041 00 | first-aid kit | | 1 | |

| Pos | Part Number | Description | Remark | Qty | Model |
|---|---|---|---|---|---|

| Model | Year | MG | SG | Illustration | Restrictions | UPD | 18:04 | 30.07.2008 | PET |
|---|---|---|---|---|---|---|---|---|---|
| 986 | 2004 | 0 | 01 | 001-05 | | 229 | | | |

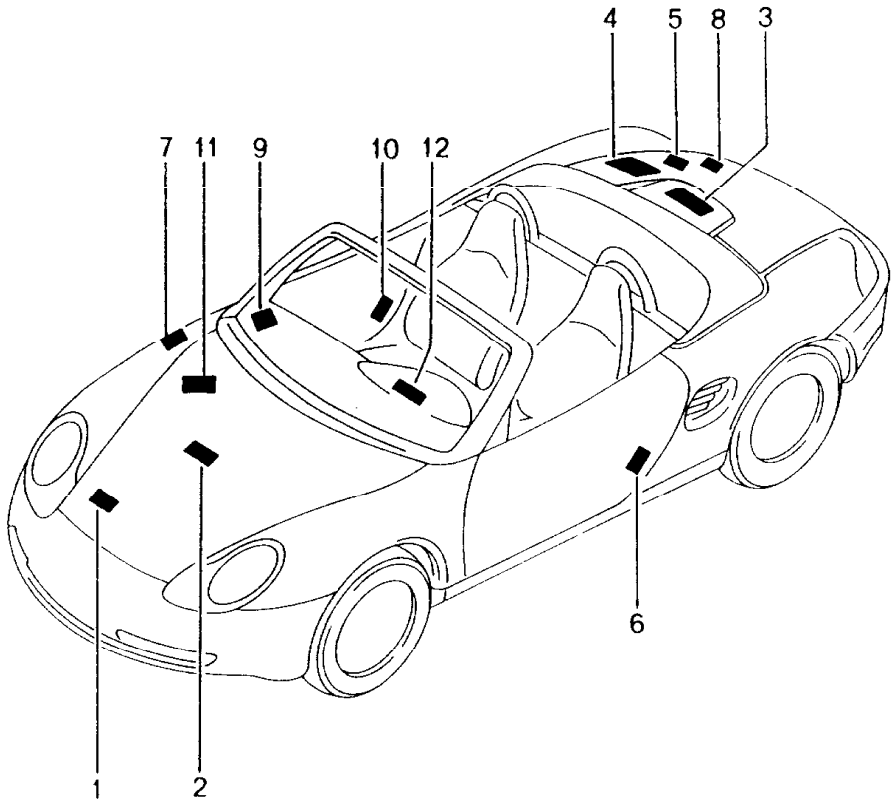


| Pos | Part Number | Description | Remark | Qty | Model |
|---|---|---|---|---|---|
| | | stickers | | | |
| | | stickers<br>tyre pressure | | | |
| 1 | 986 701 287 20 | sticker | | 1 | M 009 |
| 1 | 986 701 287 23 | sticker | | 1 | M 008 |
| 1 | 986 701 287 22 | sticker | | 1 | (AUS) M 009 |
| 1 | 986 701 287 25 | sticker | | 1 | (AUS) M 008 |
| | | stickers<br>emergency wheel | | 1 | |
| 2 | 996 361 701 10 | sticker<br>english | | 1 | (AUS) |
| 2 | 928 701 150 00 | sticker<br>"MAX 80 KM/H" | | 1 | |
| | | stickers<br>engine specifications | | | |
| 4 | 986 006 107 00 | sticker | 97 | 1 | (AUS) M 009 |
| 4 | 986 006 107 01 | sticker | 98 | 1 | (AUS) M 009 |
| 4 | 986 006 107 02 | sticker | 99 | 1 | (AUS) M 009 |
| 4 | 986 006 107 05 | sticker | 00 | 1 | (AUS) M 009 |
| 4 A | 986 006 107 07 | sticker | 01 | 1 | (AUS) M 009 |
| 4 | 000 043 204 77 | sticker | 01 | 1 | (AUS) M 009 |
| 4 | 986 006 107 09 | sticker | 02 | 1 | (AUS) M 009 |
| 4 | 986 006 107 11 | sticker | 03 | 1 | (AUS) M 009 |
| 4 | 986 006 107 13 | sticker | 04 | 1 | (AUS) M 009 |
| 4 | 986 006 107 06 | sticker | 00 | 1 | (AUS) M 008 |
| 4 | 986 006 107 08 | sticker | 01 | 1 | (AUS) M 008 |
| 4 | 986 006 107 10 | sticker | 02 | 1 | (AUS) M 008 |
| 4 | 986 006 107 12 | sticker | 03 | 1 | (AUS) M 008 |
| 4 | 986 006 107 14 | sticker | 04 | 1 | (AUS) M 008 |
| 4 | 993 006 108 00 | sticker | 97 | 1 | M 068 |
| 4 | 993 006 108 02 | sticker | -01 | 1 | M 068 |

| Pos | Part Number | Description | Remark | Qty | Model |
|---|---|---|---|---|---|
| 4 | 996 006 108 00 | sticker | 02- | 1 | M 068 |
| (4) | 996 006 120 00 | indication sticker<br>lid<br>expansion tank<br>coolant | 00- | 1 | |
| 5 | 928 701 140 04 | sticker<br>exhaust gas | | 1 | M 068,M 325 |
| | | stickers<br>type of fuel | | | |
| 7 | 996 006 117 00 | sticker<br>98 ROZ | | 1 | |
| 7 | 996 006 117 01 | sticker<br>98 ROZ/RON | | 1 | M 150 |
| 7 | 996 006 117 02 | sticker<br>96 ROZ | | 1 | (AUS) |
| 7 | 996 006 117 03 | sticker<br>93 RON/MON/2 | | 1 | ( J ) |
| 7 | 996 701 190 00 | sticker<br>fuel tank cap | 01- | 1 | |
| 8 | 993 006 544 01 | sticker<br>engine oil<br>- MOBIL 1 - | | 1 | |
| | | stickers<br>airbag | | | |
| 9 | 996 701 421 01 | sticker<br>child car seat | 98 | 1 | |
| 9 | 3B0 010 219 B | sticker<br>child car seat | 99- | 1 | |
| 9 | 986 701 430 00 | sticker<br>child car seat<br>german<br>english | 01- | 1 | |
| 9 | 986 701 430 01 | sticker<br>child car seat<br>italian<br>french | 01- | 1 | |
| 9 | 986 701 430 02 | sticker<br>child car seat<br>english<br>spanish | 01- | 1 | |
| 9 | 986 701 430 03 | sticker<br>child car seat<br>swedish<br>english | 01- | 1 | |
| 9 | 986 701 430 04 | sticker<br>child car seat<br>arabic<br>english | 04 | 1 | |
| 11 | 986 701 141 01 | sticker<br>air conditioner | | 1 | |
| | | stickers<br>convertible top control<br>see group<br>8/09/05 | | | |

| Model | Year | MG | SG | Illustration | Restrictions | UPD | 18:04 | 30.07.2008 | PORSCHE PET PORSCHE |
|---|---|---|---|---|---|---|---|---|---|
| 986 | 2004 | 0 | 04 | 004-00 | | 229 | | | |

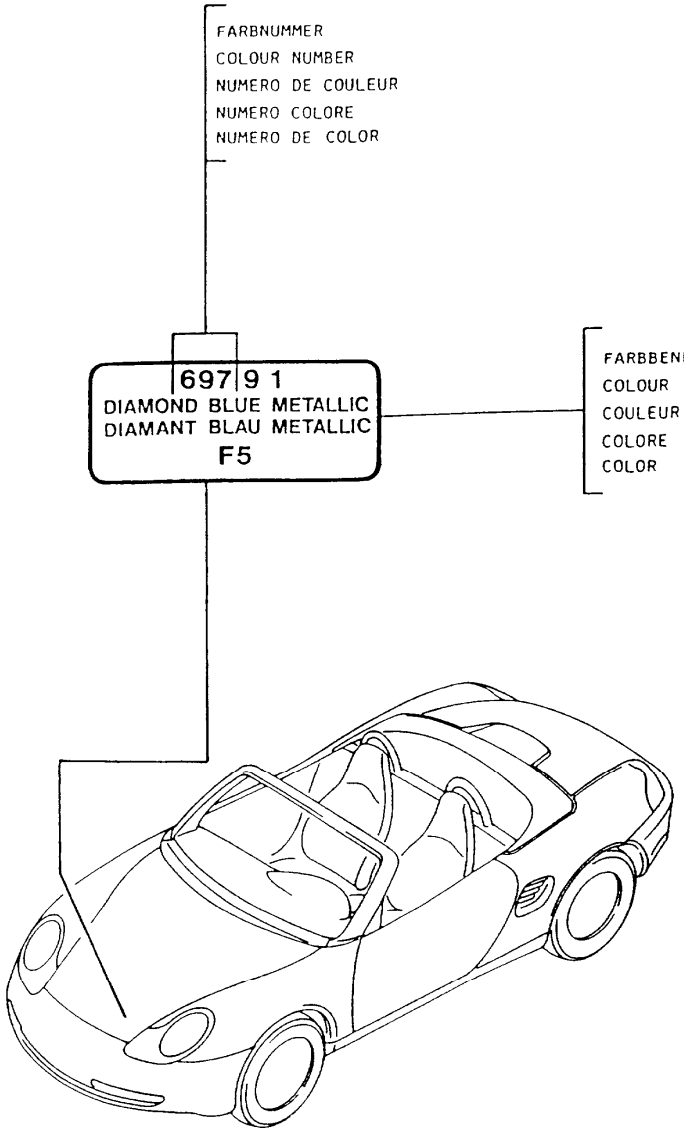


| Pos | Part Number | Description | Remark | Qty | Model |
|---|---|---|---|---|---|
| | | paint touch-up applicator | | | |
| - | 911 095 932 20 | paint touch-up applicator | | X | |
| | 719 | black | | | A 1 |
| | 80K | guards red | | | G 1 |
| | 3AT | glacier white | | | Z 1 |
| | 9A3 | biarritz white | | | Z 2 |
| | 12L | pastel yellow | | | Q 1 |
| | 3AR | blue turquoise | | | J 1 |
| | 12G | speed yellow | | | 50 / X 4 |
| | 347 | dark blue | | | 55 |
| | B9A | carrara white | | | B 4 |
| - | 911 095 933 20 | paint touch-up applicator set<br>comprising:<br>paint touch-up applicator primer<br>paint touch-up applicator clear lacquer | | X | |
| | 92T | arctic silver metallic | | | X 1 |
| | 3AY | ocean blue metallic | | | E 1 |
| | 3AW | zenith blue metallic | | | F 1 |
| | 84R | arena red metallic | | | H 8 |
| | 25H | ocean jade metallic | | | J 3 |
| | 746 | black-metallic | | | Z 8 |
| | 23I | wimbledon green metallic | | | 51 |
| | 22E | forest green metallic | | | 53 |
| | 2A2 | rainforest green metallic | | | J 4 |
| | 39G | violet metallic | | | 54 |
| | 37U | cobalt blue metallic | | | 56 |
| | 92E | polar silver metallic | | | 58 |
| | 22D | slate grey metallic | | | 59 |
| | 39N | iris blue metallic | | | 61 |

| Pos | Part Number | Description | Remark | Qty | Model |
|---|---|---|---|---|---|
| | 37W | midnight blue metallic | -02<br>03- | | 62<br>E 9 |
| | 8A4 | orient red metallic | | | L 1 |
| | 3A9 | lapis blue metallic | -02 | | E 3 |
| | M5W | lapis blue metallic | 03- | | J 2 |
| | 6A7 | meridian metallic | -03<br>04 | | X 2<br>64 |
| | 1A9 | zanzibar red | -02<br>03 | | N 1<br>63 |
| | 6B5 | seal grey metallic | | | Y 1 |
| | C9Z | basalt black metallic | | | Z 4 |
| | M6W | lagoon green metallic | | | G 4 |
| | M3W | carmon red metallic | | | E 4 |
| | M7X | atlas grey metallic | | | E 7 |
| | M7Z | gt silver metallic | 04 | | M 091 |

| Pos | Part Number | Description | Remark | Qty | Model |
|---|---|---|---|---|---|

| Model | Year | MG | SG | Illustration | Restrictions | UPD | 18:04 | 30.07.2008 | PET |
|---|---|---|---|---|---|---|---|---|---|
| 986 | 2004 | 1 | 01 | 101-00 | | 229 | | | |

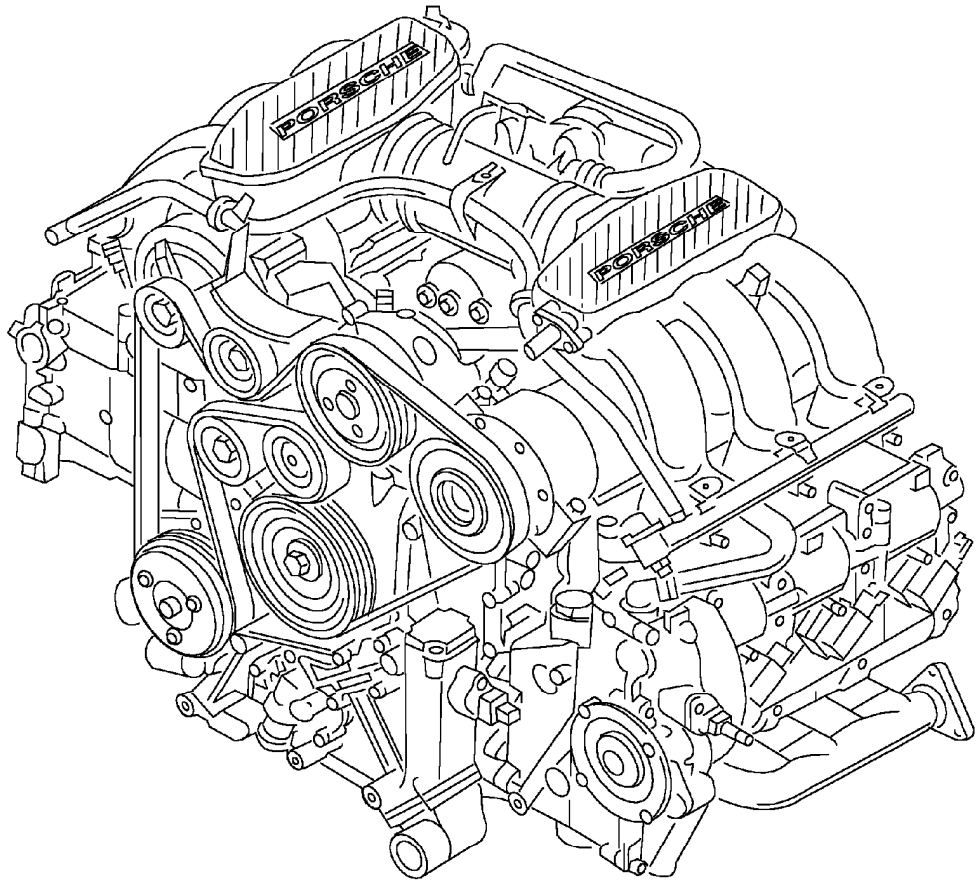


| Pos | Part Number | Description | Remark | Qty | Model |
|---|---|---|---|---|---|
| | | replacement engine<br><br><br>without<br>drive plate<br>tiptronic<br>without<br>flywheel<br>manual transmission<br>without<br>compressor | -99<br>00-02<br>03- | | M 96.20<br>M 96.21/22<br>M 96.23/24 |
| 1 | > 986 100 920 00 | replacement engine | -99 | 1 | M 96.20<br>M 481 |
| 1 | > 986 100 920 01 | replacement engine | -99 | 1 | M 96.20<br>M 249 |
| 1 | > 986 100 921 00 | replacement engine | 00 | 1 | M 96.21<br>M 480 |
| 1 | > 986 100 921 04 | replacement engine | 01 | 1 | M 96.21<br>M 480 |
| 1 | > 986 100 921 08 | replacement engine | 02 | 1 | M 96.21<br>M 480 |
| 1 | > 986 100 924 00 | replacement engine | 03 | 1 | M 96.24<br>M 480 |
| 1 | > 986 100 924 04 | replacement engine | 04 | 1 | M 96.24<br>M 480 |
| 1 | > 986 100 924 08 | replacement engine | 04<br>04 | 1 | M 96.24<br>M 480 /M 091 |
| 1 | > 986 100 921 01 | replacement engine | 00 | 1 | M 96.21<br>M 249 |
| 1 | > 986 100 921 05 | replacement engine | 01 | 1 | M 96.21<br>M 249 |
| 1 | > 986 100 921 09 | replacement engine | 02 | 1 | M 96.21<br>M 249 |
| 1 | > 986 100 924 01 | replacement engine | 03 | 1 | M 96.24<br>M 249 |
| 1 | > 986 100 924 05 | replacement engine | 04 | 1 | M 96.24<br>M 249 |
| 1 | > 986 100 924 09 | replacement engine | 04 | 1 | M 96.24<br>M 249 /M 091 |
| 1 | > 986 100 922 00 | replacement engine | 00 | 1 | M 96.22<br>M 481 |

| Pos | Part Number | Description | Remark | Qty | Model |
|---|---|---|---|---|---|
| 1 | > 986 100 922 04 | replacement engine | 01 | 1 | M 96.22<br>M 481 |
| 1 | > 986 100 922 08 | replacement engine | 02 | 1 | M 96.22<br>M 481 |
| 1 | > 986 100 923 00 | replacement engine | 03 | 1 | M 96.23<br>M 481 |
| 1 | > 986 100 923 04 | replacement engine | 04 | 1 | M 96.23<br>M 481 |
| 1 | > 986 100 922 01 | replacement engine | 00 | 1 | M 96.22<br>M 249 |
| 1 | > 986 100 922 05 | replacement engine | 01 | 1 | M 96.22<br>M 249 |
| 1 | > 986 100 922 09 | replacement engine | 02 | 1 | M 96.22<br>M 249 |
| 1 | > 986 100 923 01 | replacement engine | 03 | 1 | M 96.23<br>M 249 |
| 1 | > 986 100 923 05 | replacement engine | 04 | 1 | M 96.23<br>M 249 |

| Pos | Part Number | Description | Remark | Qty | Model |
|---|---|---|---|---|---|

| Model | Year | MG | SG | Illustration | Restrictions | UPD | 18:04 | 30.07.2008 | PORSCHE PET PORSCHE |
|---|---|---|---|---|---|---|---|---|---|
| 986 | 2004 | 1 | 01 | 101-05 | | 229 | | | |

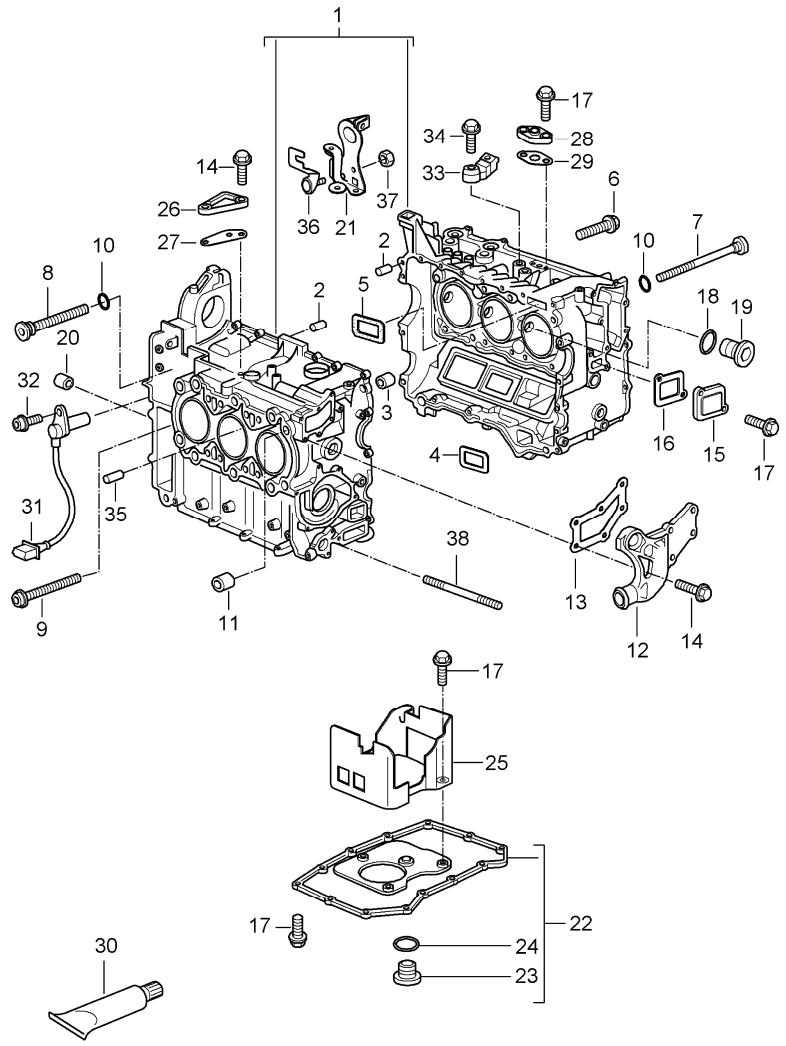


| Pos | Part Number | Description | Remark | Qty | Model |
|---|---|---|---|---|---|
| | | crankcase | -99<br>00-02<br>03- | | M 96.20<br>M 96.21/22<br>M 96.23/24 |
| 1 | 996 101 901 00 | crankcase<br>M >> 65X 17100<br>use also:<br>996 101 012 64<br>996 101 018 51 | -99 | 1<br><br>1<br>6 | M 96.20 |
| 1 | 996 101 901 02 | crankcase | 00-02 | 1 | M 96.21 |
| 1 | 996 101 901 04 | crankcase | 03- | 1 | M 96.24 |
| 1 | 996 101 901 03 | crankcase | 00-02 | 1 | M 96.22 |
| 1 | 996 101 901 05 | crankcase | 03- | 1 | M 96.23 |
| 2 | 999 012 049 00 | straight pin<br>12M 6 X 22 | | 3 | |
| 3 | 996 101 253 50 | dowel sleeve | | 1 | |
| 3 | 996 101 253 51 | dowel sleeve | | 1 | |
| 4 | 996 101 361 51 | gasket | | 1 | |
| 5 | 996 101 363 50 | gasket | | 1 | |
| 6 | U 900 378 174 09 | hexagon-head bolt<br>M 6 X 35 | | 25 | |
| (6) | 999 217 151 09 | hexagon-head bolt<br>M 6 X 35 | | 25 | |
| 7 | 996 101 219 52 | screw<br>9 X 150 | | 1 | |
| 8 | 996 101 229 00 | screw<br>M 9 X 94 | | 1 | |
| 9 | 996 101 203 00 | screw<br>9 X 94 | | 1 | |
| 10 | 999 701 789 40 | o-ring<br>12 X 2<br>use also:<br>grease<br>999 917 788 00 | | 2<br><br><br>1 | |
| 11 | 999 095 043 01 | dowel sleeve<br>17M 6 X 18,5 | | 4 | |
| 12 | 996 101 021 00 | lid | | 1 | |
| 12 | 996 101 021 01 | lid | | 1 | |

| Pos | Part Number | Description | Remark | Qty | Model |
|---|---|---|---|---|---|
| 13 | 996 101 331 50 | gasket | | 1 | |
| 14 | 900 378 030 09 | hexagon-head bolt<br>M 6 X 20 | | 10 | |
| 15 | 996 101 216 51 | lid | | 1 | |
| 15 | 996 101 016 00 | lid | | 1 | |
| 16 | 996 101 336 50 | gasket | | 1 | |
| 17 | 900 378 035 01 | hexagon-head bolt<br>M 6 X 16 | | 24 | |
| 18 | 900 123 147 30 | sealing ring<br>A 27 X 32 | | 1 | |
| 19 | 900 219 017 30 | screw plug<br>M 27 X 2 | | 1 | |
| 20 | 014 301 153 B | dowel sleeve<br>13 X 16 X13,5 | | 2 | |
| 21 | 996 101 213 56 | retaining bar | | 1 | |
| 21 | 996 101 213 57 | retaining bar | | 1 | |
| 22 | 996 107 031 55 | oil pan | | 1 | |
| 23 | 900 219 009 30 | screw plug<br>M 18 X 1,5 | | 1 | |
| 24 | 900 123 106 30 | sealing ring<br>A 18 X 24 | | 1 | |
| 25 | 996 107 243 51 | bulkhead | | 1 | |
| 26 | 996 113 140 53 | lid | | 1 | |
| 27 | 996 113 233 50 | gasket | | 1 | |
| 28 | 996 113 340 50 | lid | | 1 | |
| 29 | 996 113 213 51 | gasket | | 1 | |
| 30 | 000 043 203 73 | sealing compound<br>30 ML | | X | |
| (30) | 000 043 204 35 | sealing compound<br>50 ML | | X | |
| 31 | A 986 606 112 01 | pulse sender | | 1 | |
| 31 | 986 606 112 02 | pulse sender | -02 | 1 | |
| 31 | 986 606 112 03 | pulse sender | 03- | 1 | |

| Pos | Part Number | Description | Remark | Qty | Model |
|---|---|---|---|---|---|
| - | 999 650 181 40 | plug socket | | 1 | |
| - | 999 652 771 12 | connector | | 3 | |
| - | 999 704 161 40 | gasket | | 3 | |
| 32 | 999 218 005 02 | pan-head screw<br>M 6 X 16 | | 1 | |
| 33 | A 996 606 121 00 | knock sensor | | 2 | |
| 33 | 996 606 125 00 | knock sensor | | 2 | |
| - | 999 650 167 40 | plug socket | | 2 | |
| - | 999 650 052 12 | connector | | 4 | |
| - | 999 704 161 40 | gasket | | 4 | |
| 34 | 900 378 033 09 | hexagon-head bolt<br>AM 8 X 30 | | 2 | |
| 34 | 900 378 108 09 | hexagon-head bolt<br>AM 8 X 35 | | 2 | |
| 35 | 900 095 137 01 | roll pin<br>5,0 X 12 | | 2 | |
| 36 | 996 101 613 50 | support | | 1 | M 249 |
| 37 | 900 377 010 09 | hexagon nut<br>M 6 | | 1 | M 249 |
| -- | 900 036 029 02 | lid<br>B 16 | | 2 | |
| -- | 999 036 005 02 | lid<br>B 50 | | 2 | |

| Model | Year | MG | SG | Illustration | Restrictions | UPD | 18:05 | 30.07.2008 | PET |
|---|---|---|---|---|---|---|---|---|---|
| 986 | 2004 | 1 | 01 | 101-10 | | 229 | | | |

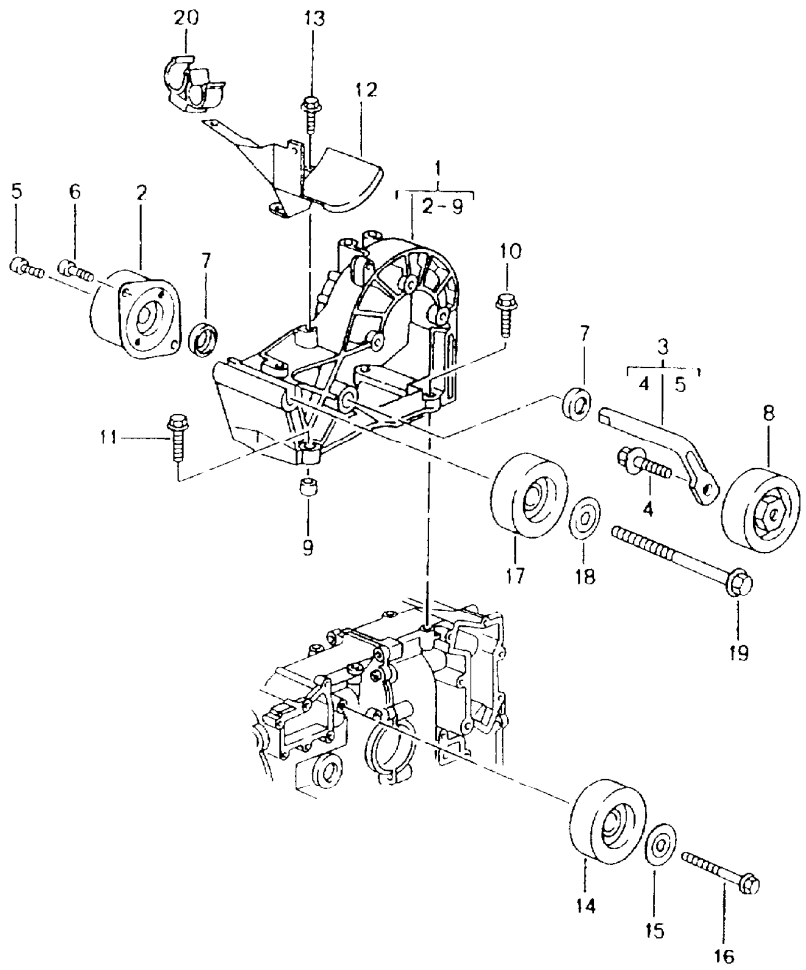


| Pos | Part Number | Description | Remark | Qty | Model |
|---|---|---|---|---|---|
| | | belt tensioner<br>belt drive | -99<br>00-02<br>03- | | M 96.20<br>M 96.21/22<br>M 96.23/24 |
| 1 | 996 102 016 67 | bracket | -03 | 1 | M 96.20/21<br>M 96.22 |
| 1 | 996 102 016 69 | bracket | 03- | 1 | M 96.23/24 |
| 2 | 996 102 260 50 | tensioner | | 1 | |
| 3 | 996 102 360 51 | lever | | 1 | |
| 4 | A 999 072 039 09 | hexagon-head bolt<br>M 10 X 30 | -98 | 1 | |
| 4 | 999 072 041 09 | hexagon-head bolt<br>M 10 X 30 | 99- | 1 | |
| 5 | 900 067 117 09 | pan-head screw<br>M 6 X 16 | | 1 | |
| 6 | 999 067 045 09 | pan-head screw<br>M 8 X 22 | | 2 | |
| 7 | 996 102 365 50 | dust boot | | 2 | |
| 8 | A 996 102 117 53 | tensioning roller | -98 | 1 | |
| 8 | 996 102 117 56 | tensioning roller | 99- | 1 | |
| 9 | 999 095 064 00 | dowel sleeve<br>12 M 6 X 13 | | 2 | |
| 10 | 900 378 022 09 | hexagon-head bolt<br>AM 8 X 25 | | 2 | |
| 11 | 900 378 108 09 | hexagon-head bolt<br>AM 8 X 35 | | 2 | |
| 12 | 996 102 211 05 | cover | | 1 | |
| 13 | 900 378 163 09 | hexagon-head bolt<br>M 6 X 16 | | 2 | |
| 14 | A 996 102 119 54 | deflection roller | | 1 | M 96.20 |
| 14 | A 996 102 119 55 | deflection roller | | 1 | M 96.21/22 |
| 14 | 996 102 119 58 | deflection roller | | 1 | M 96.23/24 |
| 15 | 996 102 127 50 | cover disc | -98 | 1 | M 96.20 |
| 15 | 996 102 127 51 | cover disc | 99 | 1 | M 96.20 |
| 15 | 996 102 127 52 | cover disc | -02 | 1 | M 96.21/22 |

| Pos | Part Number | Description | Remark | Qty | Model |
|---|---|---|---|---|---|
| 15 | 996 102 127 54 | cover disc | 03- | 1 | M 96.23/24 |
| 16 | 900 378 150 09 | hexagon-head bolt<br>AM 8 X 55 | | 1 | M 96.20 |
| (16) | 900 378 056 02 | hexagon-head bolt<br>AM 8 X 60 | | 1 | M 96.21/22<br>M 96.23/24 |
| 17 | A 996 102 118 52 | deflection roller | | 1 | M 96.20 |
| 17 | A 996 102 118 53 | deflection roller | | 1 | M 96.21/22<br>M 96.23/24 |
| 17 | 996 102 118 56 | deflection roller | | 1 | |
| 18 | A 996 102 125 50 | cover disc | -98 | 1 | M 96.20 |
| 18 | 996 102 125 51 | cover disc | 99 | 1 | M 96.20 |
| 18 | 996 102 125 52 | cover disc | 00- | 1 | M 96.21/22 |
| 18 | 996 102 125 53 | cover disc | 03- | 1 | M 96.23/24 |
| 19 | 900 378 181 09 | hexagon-head bolt<br>M 10 X 145 | | 1 | |
| 20 | U 964 573 471 00 | support | | 1 | |
| (20) | 964 573 471 01 | support | | 1 | |

| Pos | Part Number | Description | Remark | Qty | Model |
|---|---|---|---|---|---|

| Model | Year | MG | SG | Illustration | Restrictions | UPD | 18:05 | 30.07.2008 | PORSCHE PET PORSCHE |
|---|---|---|---|---|---|---|---|---|---|
| 986 | 2004 | 1 | 02 | 102-00 | | 229 | | | |

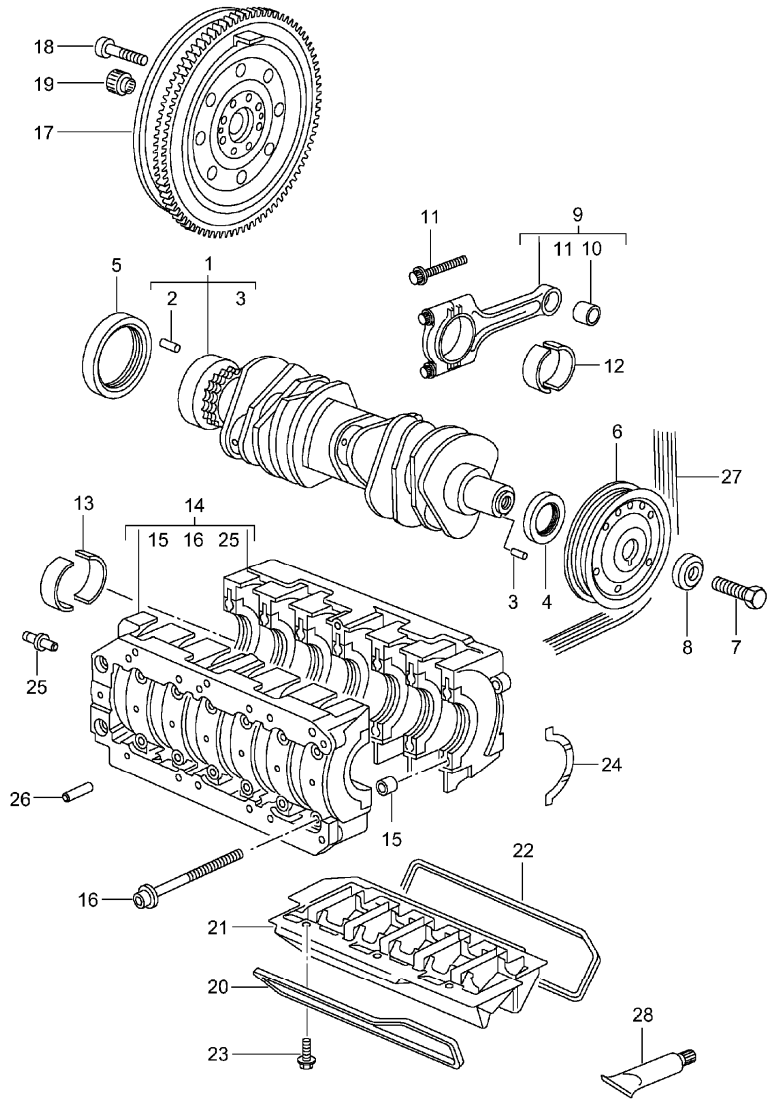


| Pos | Part Number | Description | Remark | Qty | Model |
|---|---|---|---|---|---|
| | | crankshaft | -99<br>00-02<br>03- | | M 96.20<br>M 96.21/22<br>M 96.23/24 |
| 1 | 996 102 011 06 | crankshaft<br>M >> 65X 23559<br>see technical information<br>group 1<br>NR. 8/00 | | 1 | M 96.20 |
| (1) | 996 102 011 07 | crankshaft<br>M 65X 23560 >><br>see technical information<br>group 1<br>NR. 8/00 | | 1 | M 96.20 |
| 1 | 996 102 011 57 | crankshaft<br>see technical information<br>group 1<br>NR. 8/00 | 00 | 1 | M 96.21/22 |
| (1) | 996 102 011 56 | crankshaft<br>see technical information<br>group 1<br>NR. 8/00 | 01-02<br>03- | 1 | M 96.21/22<br>M 96.23/24 |
| 2 | 900 095 031 01 | roll pin<br>6,0 X 16 | | 1 | |
| 3 | 900 012 154 00 | straight pin<br>A 4,0 X 10 | -01 | 1 | |
| 3 | 900 302 021 00 | straight pin<br>A 4,0 X 10 | 02- | 1 | |
| 4 | 999 113 475 40 | shaft sealing ring<br>40 X 62 X 10<br>85 X 105 X 11 | | 1 | |
| 5 | U 999 113 490 40 | shaft sealing ring<br>85 X 105 X 11 | | 1 | |
| 5 | 997 101 212 00 | shaft sealing ring<br>85 x 105 x 11 | | 1 | |
| 6 | 996 102 115 63 | pulley | | 1 | |
| 7 | 900 082 085 09 | hexagon-head bolt<br>M 16 X 1,5 X 60 | | 1 | |
| 8 | 996 102 315 50 | thrust washer | | 1 | |

| Pos | Part Number | Description | Remark | Qty | Model |
|---|---|---|---|---|---|
| (9) | 996 103 975 01 | connecting rod<br>connecting rods<br>comprising:<br>6<br>connecting rods<br>see workshop manual<br>986 GR.1-1 | | 1 | |
| 10 | 996 103 111 51 | connecting rod bush | | 6 | |
| 11 | U 996 103 115 51 | connecting rod bolt | | 12 | |
| 11 | 997 103 115 01 | connecting rod bolt | | 12 | |
| 12 | 996 103 121 62 | connecting-rod bearing | | 12 | |
| 13 | 996 101 131 62 | crankshaft bearing | | 14 | M 96.20 |
| 13 | 996 101 205 10 | crankshaft bearing | | 14 | M 96.21/22<br>M 96.23/24 |
| 14 | A 996 101 012 54 | bearing case | -97 | 1 | M 96.20 |
| 14 | A 996 101 012 62 | bearing case<br>use also:<br>996 101 018 51 | -98 | 1<br>6 | M 96.20 |
| 14 | 996 101 012 64 | bearing case<br>use also:<br>996 101 018 51 | -02 | 1<br>6 | |
| 14 | 996 101 007 05 | bearing case | 03- | 1 | M 96.23/24 |
| 15 | 999 095 064 00 | dowel sleeve<br>12 M 6 X 13<br>M 9 X 129 | | 3 | |
| 16 | 996 101 115 59 | screw<br>M 9 X 127 | | 14 | |
| 17 | 986 114 012 01 | double-mass flywheel | -99 | 1 | M 96.20<br>M 481<br>M 96.22<br>M 481<br>M 96.23<br>M 481 |
| 17 | 986 114 012 05 | double-mass flywheel | | 1 | |
| 17 | 986 114 012 04 | double-mass flywheel | | 1 | M 96.21<br>M 480<br>M 96.24<br>M 480 |
| 17 | 986 114 012 06 | double-mass flywheel | | 1 | M 96.21 |
| 18 | 999 073 092 09 | pan-head screw<br>M 10 X 1 X 50 | | 8 | |
| 19 | 034 105 313 A | needle sleeve | | 1 | |
| 20 | 996 101 241 51 | gasket | | 1 | |
| 21 | 996 101 016 50 | oil separator | | 1 | |
| 22 | 996 101 242 51 | gasket | | 1 | |
| 23 | 999 218 005 02 | pan-head screw<br>M 6 X 16 | | 6 | |
| 24 | A 996 101 129 51 | thrust washer | | 2 | |
| 24 | 996 101 129 52 | thrust washer | | 2 | |
| 25 | 996 101 117 53 | straight pin | | 1 | |
| 26 | 996 101 018 51 | splash valve | | 6 | |
| 27 | 996 102 151 65 | poly-rib belt | | 1 | |
| 27 | 996 102 151 64 | poly-rib belt | | 1 | M 573 |
| 28 | 000 043 204 17 | extreme-pressure grease<br>100 GR. | | X | |

| Model | Year | MG | SG | Illustration | Restrictions | UPD | 18:05 | 30.07.2008 | PET |
|---|---|---|---|---|---|---|---|---|---|
| 986 | 2004 | 1 | 02 | 102-05 | | 229 | | | |

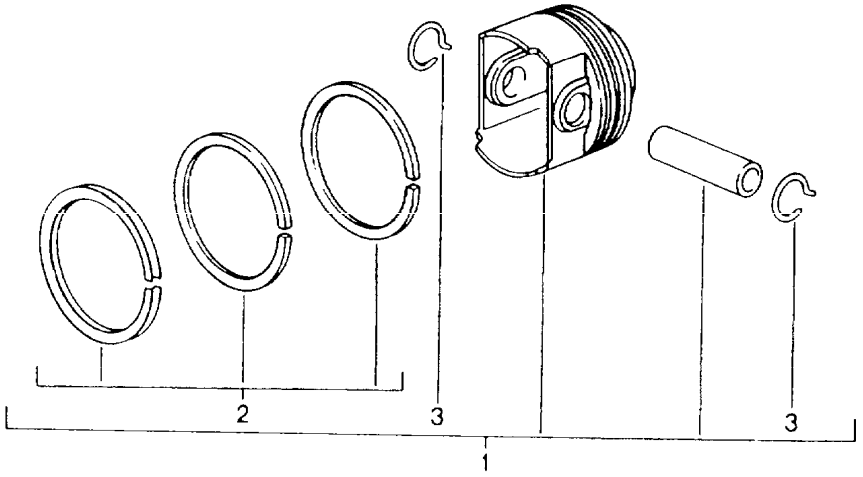


| Pos | Part Number | Description | Remark | Qty | Model |
|---|---|---|---|---|---|
| | | piston | -99<br>00-02<br>03- | | M 96.20<br>M 96.21/22<br>M 96.23/24 |
| 1 | 996 103 031 11 | piston<br>tolerance range<br>X<br>number plate<br>-<br>476 - 482 G | | 6 | M 96.20 |
| 1 | 996 103 031 12 | piston<br>tolerance range<br>X<br>number plate<br>+<br>482 - 488 G | | 6 | M 96.20 |
| 1 | 996 103 031 59 | piston<br>tolerance range<br>X<br>number plate<br>-<br>529 - 535 G | | 6 | M 96.21 |
| 1 | 996 103 032 10 | piston<br>tolerance range<br>X<br>number plate<br>-<br>532 - 538 G | | 6 | M 96.24 |
| 1 | 996 103 031 60 | piston<br>tolerance range<br>X<br>number plate<br>+<br>535 - 541 G | | 6 | M 96.21 |
| 1 | 996 103 032 11 | piston<br>tolerance range<br>X<br>number plate<br>+<br>538 - 544 G | | 6 | M 96.24 |
| 1 | 996 103 071 04 | piston<br>tolerance range<br>X<br>number plate<br>-<br>460 - 466 G | | 6 | M 96.22 |

| Pos | Part Number | Description | Remark | Qty | Model |
|---|---|---|---|---|---|
| 1 | A 996 103 071 09 | piston<br>tolerance range<br>X<br>number plate<br>-<br>460 - 466 G | | 6 | M 96.23 |
| 1 | 996 103 071 05 | piston<br>tolerance range<br>X<br>number plate<br>+<br>466 - 472 G | | 6 | M 96.22 |
| 1 | 996 103 071 15 | piston<br>tolerance range<br>X<br>number plate<br>+<br>466 - 472 G | | 6 | M 96.23 |
| 1 | 996 103 071 14 | piston<br>tolerance range<br>X<br>number plate<br>-<br>460 - 466 G | | 6 | M 96.23 |
| 2 | 996 103 033 02 | set of piston rings | | 6 | M 96.20 |
| 2 | 996 103 033 51 | set of piston rings | | 6 | M 96.21<br>M 96.24 |
| 2 | 996 103 073 00 | set of piston rings | | 6 | M 96.22<br>M 96.23 |
| 3 | 999 178 018 00 | circlip<br>C 22 | | 12 | M 96.20 |
| 3 | A 996 103 141 02 | circlip | | 12 | M 96.21/22 |
| 3 | 996 103 141 03 | circlip | | 12 | M 96.21/22<br>M 96.23/24 |

| Pos | Part Number | Description | Remark | Qty | Model |
|---|---|---|---|---|---|

| Model | Year | MG | SG | Illustration | Restrictions | UPD | 18:05 | 30.07.2008 | PORSCHE PET PORSCHE |
|---|---|---|---|---|---|---|---|---|---|
| 986 | 2004 | 1 | 03 | 103-00 | | 229 | | | |

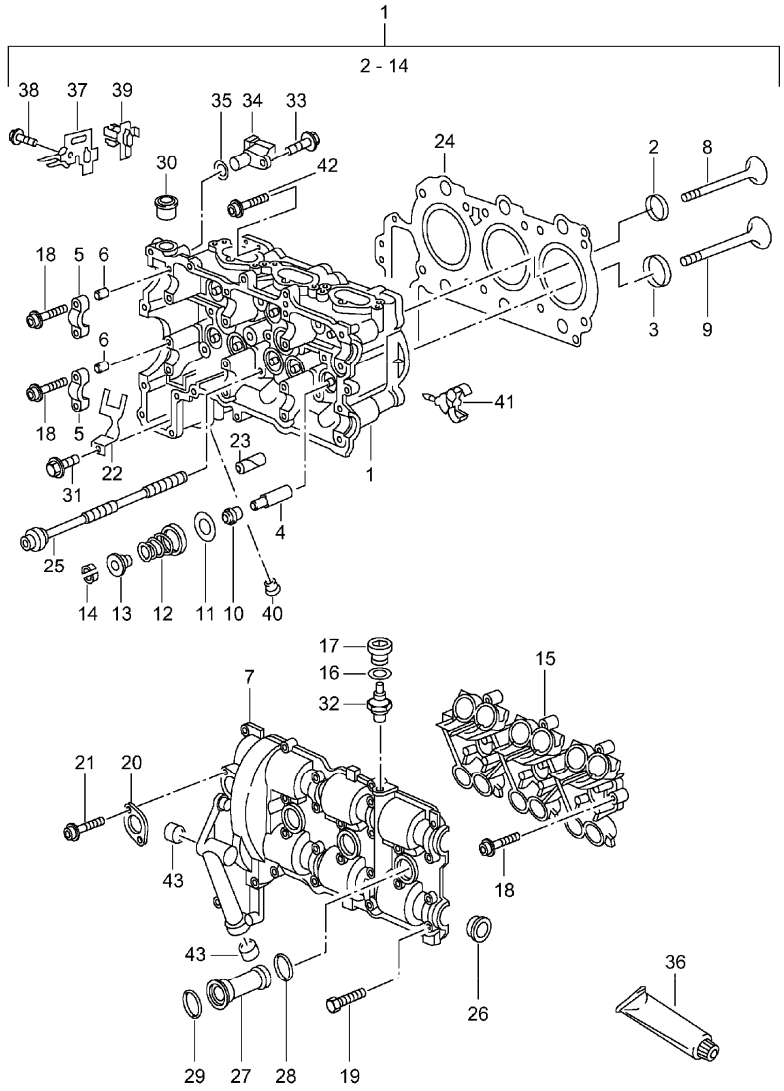


| Pos | Part Number | Description | Remark | Qty | Model |
|---|---|---|---|---|---|
| | | cylinder head | -99<br>00-02<br>03- | | M 96.20<br>M 96.21/22<br>M 96.23/24 |
| 1 | 996 104 001 09 | cylinder head<br>complete<br>cylinder<br>1-3 | | 1 | M 96.20 |
| (1) | 996 104 921 00 | cylinder head<br>complete<br>cylinder<br>1-3 | | 1 | M 96.21 |
| (1) | 996 104 941 00 | cylinder head<br>complete<br>cylinder<br>1-3 | | 1 | M 96.22 |
| (1) | 996 104 931 00 | cylinder head<br>complete<br>cylinder<br>1-3 | | 1 | M 96.23 |
| (1) | 996 104 951 00 | cylinder head<br>complete<br>cylinder<br>1-3 | | 1 | M 96.24 |
| 1 | 996 104 002 09 | cylinder head<br>complete<br>cylinder<br>4-6 | | 1 | M 96.20 |
| (1) | 996 104 922 00 | cylinder head<br>complete<br>cylinder<br>4-6 | | 1 | M 96.21 |
| (1) | 996 104 942 00 | cylinder head<br>complete<br>cylinder<br>4-6 | | 1 | M 96.22 |
| (1) | 996 104 932 00 | cylinder head<br>complete<br>cylinder<br>4-6 | | 1 | M 96.23 |
| (1) | 996 104 952 00 | cylinder head<br>complete<br>cylinder<br>4-6 | | 1 | M 96.24 |
| 5 | --- | housing<br>matching with:<br>cylinder head | | 4 | |

| Pos | Part Number | Description | Remark | Qty | Model |
|---|---|---|---|---|---|
| 6 | 996 104 117 50 | dowel sleeve | | 16 | |
| 7 | --- | lid<br>matching with:<br>cylinder head | | 2 | |
| 8 | 996 105 111 02 | intake valve | | 12 | M 96.20/22<br>M 96.23 |
| 8 | 996 105 111 52 | intake valve | | 12 | M 96.21<br>M 96.24 |
| 9 | 996 105 113 04 | exhaust valve | | 12 | M 96.20/22<br>M 96.23 |
| 9 | 996 105 247 00 | exhaust valve | | 12 | M 96.21<br>M 96.24 |
| 10 | 996 105 115 52 | valve stem seal | | 24 | |
| 11 | 996 105 117 51 | concave washer | | 24 | |
| 12 | 996 105 119 53 | valve spring | | 24 | |
| 12 | 996 105 119 56 | valve spring | | 24 | M 96.23/24 |
| 13 | 996 105 121 54 | concave washer | | 24 | |
| 14 | 996 105 123 51 | valve collet | | 48 | |
| 15 | 996 104 105 53 | housing | | 2 | |
| 15 | A 996 104 105 06 | housing | | 2 | M 96.23/24 |
| 15 | 996 104 042 03 | housing | | 2 | M 96.23/24 |
| 16 | 900 123 007 30 | sealing ring<br>A 14 X 18 | | 1 | |
| 17 | 900 219 018 30 | screw plug<br>M 14 X 1,5 | | 1 | |
| 18 | 900 067 316 02 | combination screw<br>M 6 X 35 | | 38 | |
| 19 | U 900 378 177 09 | hexagon-head bolt | | 23 | |
| (19) | 999 217 155 09 | hexagon-head bolt<br>AM 6 X 30 | | 23 | |
| 20 | A 996 105 223 51 | lid | | 2 | |
| 20 | 996 105 223 52 | lid | | 2 | |
| (20) | 996 105 244 03 | lid | 03- | 2 | M96.23/24 |
| 21 | 900 378 030 09 | hexagon-head bolt<br>M 6 X 20 | | 4 | |
| 22 | 996 104 233 01 | heat shield | | 1 | |
| 23 | 000 043 203 64 | assembly kit<br>for<br>valve stem seal | | 1 | |
| 24 | A 996 104 170 04 | cylinder head gasket<br>cylinder<br>1-3 | -97 | 1 | |
| 24 | 996 104 170 05 | cylinder head gasket<br>cylinder<br>1-3 | 98- | 1 | M 96.20 |
| 24 | 996 104 170 05 | cylinder head gasket<br>cylinder<br>1-3 | | 1 | M 96.22 |
| 24 | A 996 104 170 56 | cylinder head gasket<br>cylinder<br>1-3 | | 1 | M 96.21 |
| 24 | 996 104 170 59 | cylinder head gasket<br>cylinder<br>1-3 | | 1 | M 96.21 |
| 24 | 996 104 170 07 | cylinder head gasket<br>cylinder<br>1-3 | | 1 | M 96.23 |
| 24 | 996 104 170 58 | cylinder head gasket<br>cylinder<br>1-3 | | 1 | M 96.24 |
| (24) | A 996 104 169 00 | cylinder head gasket<br>cylinder<br>4-6 | | 1 | M 96.20 |
| (24) | A 996 104 169 01 | cylinder head gasket<br>cylinder<br>4-6 | | 1 | M 96.22 |
| (24) | 996 104 169 03 | cylinder head gasket<br>cylinder<br>4-6 | | 1 | M 96.20/22 |
| (24) | A 996 104 169 50 | cylinder head gasket<br>cylinder<br>4-6 | | 1 | M 96.21 |
| (24) | 996 104 169 52 | cylinder head gasket<br>cylinder<br>4-6 | | 1 | M 96.21 |

| Pos | Part Number | Description | Remark | Qty | Model |
|---|---|---|---|---|---|
| (24) | 996 104 170 07 | cylinder head gasket<br>cylinder<br>4-6 | | 1 | M 96.23 |
| (24) | 996 104 170 58 | cylinder head gasket<br>cylinder<br>4-6 | | 1 | M 96.24 |
| 25 | A 996 104 180 54 | screw<br>M 10 X 234 | -97 | 24 | |
| 25 | A 996 104 180 55 | screw<br>M 10 X 230 | -98 | 24 | |
| 25 | 996 104 180 56 | screw<br>M 10 X 230 | 99- | 24 | |
| 26 | 996 104 215 54 | lid | | 6 | |
| 27 | 996 105 325 52 | pipe<br>use also:<br>grease<br>999 917 788 00 | | 6<br><br><br>1 | |
| 28 | 999 707 343 40 | o-ring<br>25,07 X 2,62 | | 6 | |
| 29 | 999 707 215 40 | o-ring<br>27,94 X 5,33 | | 6 | |
| 30 | 996 104 207 53 | connection piece | | 1 | |
| 31 | 900 378 035 01 | hexagon-head bolt<br>M 6 X 16 | | 1 | |
| 32 | 986 606 203 02 | oil pressure switch | -97 | 1 | |
| 32 | 986 606 203 02 | oil pressure switch | 98- | 1 | |
| - | 999 652 447 40 | plug socket | | 1 | |
| - | 999 652 444 12 | connector | | 1 | |
| 33 | 999 218 005 02 | pan-head screw<br>M 6 X 16 | | 2 | |
| 34 | 996 606 106 01 | hall sender | | 2 | M 660 |
| 34 | 996 606 106 02 | hall sender | 98-02 | 2 | M 660 |
| 34 | 996 606 106 03 | hall sender | 03- | 2 | |
| - | 999 652 916 40 | plug socket | | 1 | |
| - | 999 652 694 12 | contact bush | | 3 | |
| - | 999 704 161 40 | gasket | | 3 | |

| Pos | Part Number | Description | Remark | Qty | Model |
|---|---|---|---|---|---|
| 35 | 999 707 404 40 | o-ring<br>17,05 X 1,78 | | 1 | |
| 36 | A 000 043 203 73 | sealing compound<br>30 ML | | X | |
| (36) | 000 043 204 35 | sealing compound<br>50 ML | | X | |
| (36) | 000 043 024 00 | extreme-pressure grease<br>1 tube<br>80 Gr.<br>camshaft | | 1 | |
| 37 | 986 607 101 03 | support | | 1 | |
| 38 | 900 378 036 09 | hexagon-head bolt<br>M 6 X 12 | | 1 | |
| 39 | 986 607 104 00 | support | | 1 | |
| 40 | 999 036 026 02 | lid<br>10 MM | | X | |
| 41 | 999 507 075 40 | cable holder<br>3,0 - 12,0 | | 2 | |
| 42 | 900 067 377 09 | pan-head screw<br>M 6 X 30 | | 8 | |
| 43 | 900 036 023 02 | lid<br>D 18 | | 2 | |

| Model | Year | MG | SG | Illustration | Restrictions | UPD | 18:05 | 30.07.2008 | PET |
|---|---|---|---|---|---|---|---|---|---|
| 986 | 2004 | 1 | 03 | 103-10 | | 229 | | | |

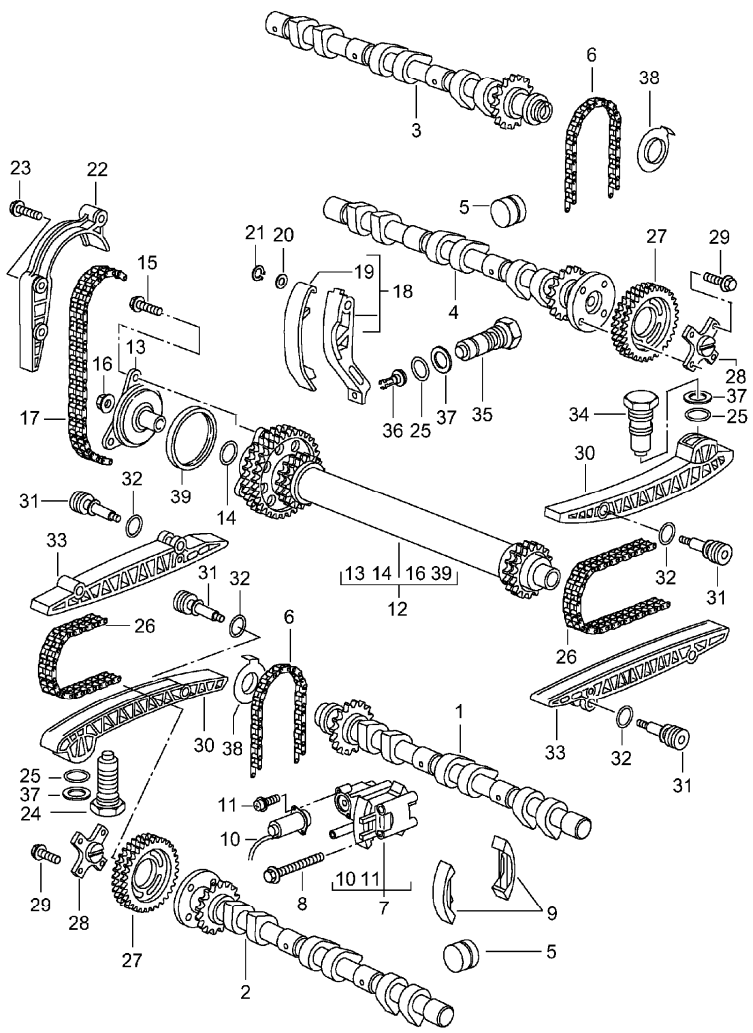


| Pos | Part Number | Description | Remark | Qty | Model |
|---|---|---|---|---|---|
| | | camshaft<br>driving mechanism | -99<br>00-02<br>03- | | M 96.20<br>M 96.21/22<br>M 96.23/24 |
| 1 | 996 105 221 04 | camshaft<br>intake<br>cylinder<br>1 - 3 | | 1 | M 96.20 |
| 1 | 996 105 221 55 | camshaft<br>intake<br>cylinder<br>1 - 3 | | 1 | M 96.21 |
| 1 | 996 105 221 05 | camshaft<br>intake<br>cylinder<br>1 - 3 | | 1 | M 96.22 |
| (1) | 996 105 045 00 | camshaft<br>intake<br>cylinder<br>1 - 3 | | 1 | M 96.23 |
| (1) | 996 105 039 00 | camshaft<br>intake<br>cylinder<br>1 - 3 | | 1 | M 96.24 |
| 1A | 996 105 051 03 | camshaft adjuster<br>cylinder<br>1 - 3 | | 1 | M 96.23/24 |
| 2 | 996 105 222 04 | camshaft<br>exhaust<br>cylinder<br>1 - 3 | | 1 | M 96.20 |
| 2 | 996 105 222 55 | camshaft<br>exhaust<br>cylinder<br>1 - 3 | | 1 | M 96.21 |
| 2 | 996 105 222 05 | camshaft<br>exhaust<br>cylinder<br>1 - 3 | | 1 | M 96.22 |
| 2 | 996 105 065 00 | camshaft<br>exhaust<br>cylinder<br>1 - 3 | | 1 | M 96.23 |
| 2 | 996 105 063 00 | camshaft<br>exhaust<br>cylinder<br>1 - 3 | | 1 | M 96.24 |

| Pos | Part Number | Description | Remark | Qty | Model |
|---|---|---|---|---|---|
| 3 | 996 105 216 04 | camshaft<br>intake<br>cylinder<br>4 - 6 | | 1 | M 96.20 |
| 3 | 996 105 216 55 | camshaft<br>intake<br>cylinder<br>4 - 6 | | 1 | M 96.21 |
| 3 | 996 105 216 05 | camshaft<br>intake<br>cylinder<br>4 - 6 | | 1 | M 96.22 |
| (3) | 996 105 046 00 | camshaft<br>intake<br>cylinder<br>4 - 6 | | 1 | M 96.23 |
| (3) | 996 105 040 00 | camshaft<br>intake<br>cylinder<br>4 - 6 | | 1 | M 96.24 |
| 3A | 996 105 052 01 | camshaft adjuster<br>cylinder<br>4 - 6<br>exhaust<br>cylinder<br>4 - 6 | | 1 | M 96.23/24 |
| 4 | 996 105 218 04 | camshaft<br>exhaust<br>cylinder<br>4 - 6 | | 1 | M 96.20 |
| 4 | 996 105 218 55 | camshaft<br>exhaust<br>cylinder<br>4 - 6 | | 1 | M 96.21 |
| 4 | 996 105 218 05 | camshaft<br>exhaust<br>cylinder<br>4 - 6 | | 1 | M 96.22 |
| 4 | 996 105 066 00 | camshaft<br>exhaust<br>cylinder<br>4 - 6 | | 1 | M 96.23 |
| 4 | 996 105 064 00 | camshaft<br>exhaust<br>cylinder<br>4 - 6 | | 1 | M 96.24 |

| Pos | Part Number | Description | Remark | Qty | Model |
|---|---|---|---|---|---|
| 5 | 996 105 041 50 | hydraulic valve tappet | | 24 | |
| 6 | 996 105 170 53 | timing chain | | 2 | |
| 7 | A 996 105 051 56 | tensioner<br>cylinder<br>1 - 3 | -97 | 1 | |
| 7 | A 996 105 051 57 | tensioner<br>cylinder<br>1 - 3 | -98 | 1 | |
| 7 | 996 105 051 58 | tensioner<br>cylinder<br>1 - 3 | 99- | 1 | |
| (7) | A 996 105 053 56 | tensioner<br>cylinder<br>4 - 6 | -97 | 1 | |
| (7) | A 996 105 053 57 | tensioner<br>cylinder<br>4 - 6 | -98 | 1 | |
| (7) | 996 105 053 58 | tensioner<br>cylinder<br>4 - 6 | 99- | 1 | |
| - | 996 105 303 05 | actuator<br>camshaft | | 2 | M96.23/24 |
| - | 999 650 167 40 | plug socket | | 2 | |
| - | 999 652 694 12 | contact bush | | 4 | |
| - | 999 704 161 40 | gasket | | 4 | |
| 8 | 900 067 372 09 | combination screw<br>M 6 X 95 | | 6 | |
| 9 | 996 105 253 00 | parts kit<br>guide rail | | 1 | |
| 10 | 996 605 901 00 | solenoid valve<br>cylinder<br>1 - 3<br>black | | 1 | |
| 10 | 996 605 902 00 | solenoid valve<br>cylinder<br>4 - 6<br>grey<br>see workshop manual<br>GR.1<br>15/05/33 | | 1 | |
| 11 | 999 141 032 07 | screw | | 2 | |

| Pos | Part Number | Description | Remark | Qty | Model |
|---|---|---|---|---|---|
| 12 | A 996 105 015 58 | intermediate shaft | -98 | 1 | |
| 12 | A 996 105 015 63 | intermediate shaft | -00 | 1 | |
| (12) | 996 105 901 00 | intermediate shaft<br>see technical information<br>group 1<br>NR. 8/00 | -00 | 1 | |
| (12) | 996 105 901 01 | intermediate shaft<br>M >> 651 12851<br>M >> 671 11237<br>see technical information<br>group 1<br>NR. 8/00 | | 1 | M 96.22<br>M 96.21 |
| (12) | 996 105 901 02 | intermediate shaft<br>M 651 12852 >><br>M 671 11238 >><br>see technical information<br>group 1<br>NR. 8/00 | | 1 | M 96.23/24<br>M 96.22<br>M 96.21 |
| 13 | U 999 707 391 40 | o-ring<br>52 X 2,5<br>see technical information<br>group 1<br>NR. 8/00 | | 1 | |
| (13) | 996 105 017 02 | housing<br>M >> 651 12851<br>M >> 671 11237<br>see technical information<br>group 1<br>NR. 8/00 | | 1 | M 96.22<br>M 96.21 |
| (13) | 996 105 024 01 | housing<br>M 651 12852 >><br>M 671 11238 >><br>see technical information<br>group 1<br>NR. 8/00 | | 1 | M 96.22<br>M 96.21 |
| 14 | 999 707 392 40 | o-ring<br>7 X 2<br>see technical information<br>group 1<br>NR. 8/00 | | 1 | |
| 15 | U 900 378 156 09 | hexagon-head bolt<br>M 6 X 20<br>see technical information<br>group 1<br>NR. 8/00 | | 3 | |
| (15) | 999 217 150 09 | hexagon-head bolt<br>M 6 X 20<br>see technical information<br>group 1<br>NR. 8/00 | | 3 | |
| 16 | 900 380 019 02 | hexagon nut<br>M 8 X 1<br>see technical information<br>group 1<br>NR. 8/00 | | 1 | |
| 17 | 996 105 171 55 | timing chain<br>see technical information<br>group 1<br>NR. 8/00 | -00 | 1 | |
| (17) | 996 105 171 56 | timing chain<br>see technical information<br>group 1<br>NR. 8/00 | 01- | 1 | |
| 18 | 996 105 165 54 | tensioner blade | -97 | 1 | |
| 18 | 996 105 165 55 | tensioner blade | 98- | 1 | |
| 19 | 996 105 195 00 | pad | | 1 | |
| 20 | 900 234 040 01 | shim<br>10 X 16 X 1,2 | | 1 | |
| 21 | 900 041 004 01 | circlip<br>10 X 1 | | 1 | |
| 22 | 996 105 166 51 | guide rail | | 1 | |
| 23 | 900 075 486 01 | combination screw<br>AM 6 X 40 | | 3 | |
| 24 | A 996 105 179 57 | chain adjuster | -98 | 1 | |
| 24 | 996 105 179 58 | chain adjuster | 99- | 1 | |
| 25 | 999 707 344 40 | o-ring<br>18,77 X 1,78 | | 3 | |
| 26 | 996 105 177 52 | timing chain | | 2 | |
| 27 | A 996 105 178 52 | sprocket | -98 | 2 | |
| (27) | 996 105 178 53 | sprocket<br>with<br>driver | | 2 | |
| 28 | A 996 105 185 54 | driver | -98 | 2 | |

| Pos | Part Number | Description | Remark | Qty | Model |
|---|---|---|---|---|---|
| 29 | 900 378 162 09 | hexagon-head bolt<br>M 6 X 15<br>for<br>996 105 178 52 | | 8 | |
| 29 | 900 378 204 09 | hexagon-head bolt<br>M 6 X 12<br>for<br>996 105 178 53 | | 8 | |
| 30 | 996 105 175 52 | tensioner blade | | 2 | |
| 31 | 996 105 162 52 | screw<br>M 6 | | 6 | |
| 32 | 999 707 346 40 | o-ring<br>15 X 3 | | 6 | |
| 33 | 996 105 173 53 | guide rail | | 2 | |
| 34 | 996 105 176 51 | chain adjuster | | 1 | |
| 35 | 996 105 180 54 | chain adjuster<br>see technical information<br>group 1<br>NR. 8/00 | -00 | 1 | |
| (35) | 996 105 180 55 | chain adjuster<br>see technical information<br>group 1<br>NR. 8/00 | 01- | 1 | |
| 36 | 996 105 197 00 | pressure pin | | 1 | |
| 37 | 900 123 147 30 | sealing ring<br>A 27 X 32 | | 3 | |
| 38 | 996 105 129 52 | rotor trim | | 1 | |
| 39 | 996 105 112 01 | gasket<br>see technical information<br>group 1<br>NR. 8/00 | | 1 | |
| -- | 000 043 024 00 | extreme-pressure grease<br>1 tube<br>80 Gr.<br>for<br>camshaft | | 1 | |

| Pos | Part Number | Description | Remark | Qty | Model |
|---|---|---|---|---|---|

| Model | Year | MG | SG | Illustration | Restrictions | UPD | 18:06 | 30.07.2008 |
|---|---|---|---|---|---|---|---|---|
| 986 | 2004 | 1 | 04 | 104-00 | | 229 | | |

PORSCHE PET PORSCHE

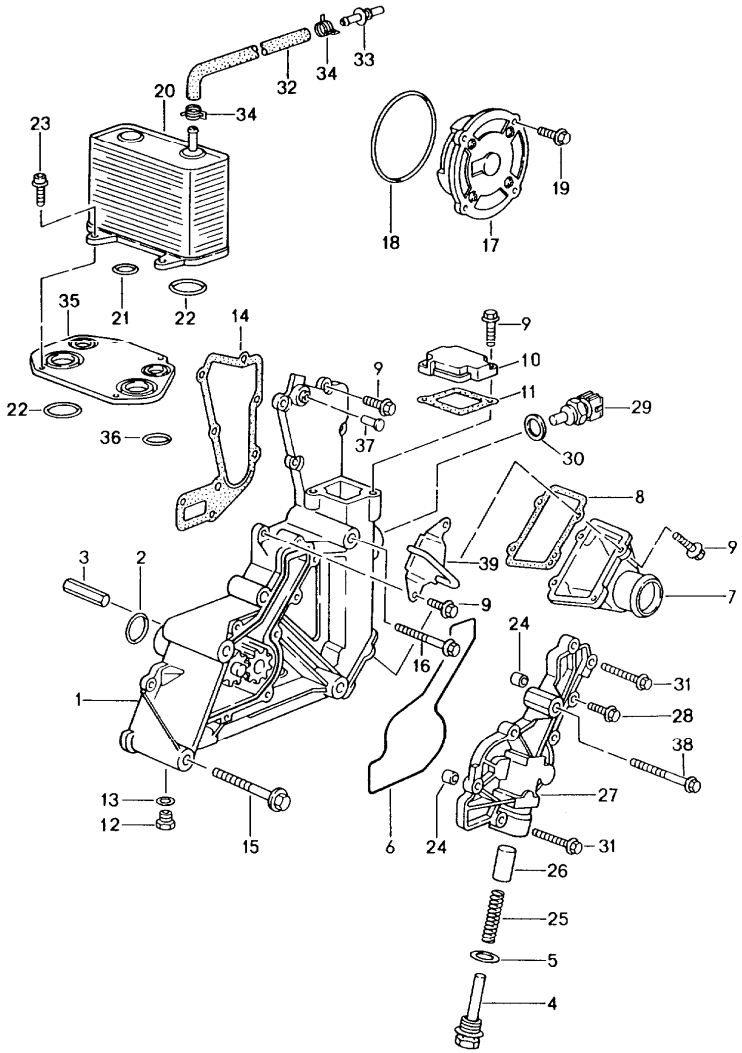


| Pos | Part Number | Description | Remark | Qty | Model |
|---|---|---|---|---|---|
| | | oil pump | | | |
| 1 | A 996 107 012 54 | oil pump | -97 | 1 | |
| 1 | A 996 107 012 55 | oil pump | -97 | 1 | |
| 1 | A 996 107 012 56 | oil pump | -98 | 1 | |
| 1 | A 996 107 012 57 | oil pump | | 1 | |
| 1 | 996 107 012 58 | oil pump | | 1 | |
| 2 | 996 107 103 51 | o-ring<br>29,1 X 2,55<br>use also:<br>grease<br>999 917 788 00 | | 2<br><br><br>1 | |
| 3 | 996 107 121 50 | driver | | 1 | |
| 4 | 996 107 105 51 | screw plug | | 1 | |
| 5 | 996 107 123 50 | gasket | | 1 | |
| 6 | 996 107 261 50 | sealing ring | | 1 | |
| 7 | 996 106 215 00 | connection piece | | 1 | M 249 |
| 7 | 996 106 216 02 | connection piece | | 1 | M480/M481 |
| 8 | 996 106 316 51 | gasket | | 1 | |
| 9 | 900 378 030 09 | hexagon-head bolt<br>M 6 X 20 | | 14 | |
| 10 | 996 106 217 01 | lid | | 1 | |
| 11 | 996 106 321 50 | gasket | | 1 | |
| 12 | 900 219 007 02 | screw plug<br>M 10 X 1 | | 1 | |
| 13 | 900 123 144 30 | sealing ring<br>A 10 X 13,5 | | 1 | |
| 14 | 996 107 337 50 | gasket | | 1 | |
| 15 | 999 072 027 09 | hexagon-head bolt<br>M 10 X 120 | | 3 | |
| 16 | 900 378 095 09 | hexagon-head bolt<br>M 10 X 100 | | 1 | |
| 17 | 996 107 021 52 | oil pump | -97 | 2 | |
| 17 | 996 107 021 54 | oil pump | -01 | 2 | |

| Pos | Part Number | Description | Remark | Qty | Model |
|---|---|---|---|---|---|
| 17 | 996 107 021 55 | oil pump | 02- | 2 | |
| 18 | 996 107 221 51 | o-ring<br>95 X 2,5 | | 2 | |
| | | use also:<br>grease<br>999 917 788 00 | | 1 | |
| 19 | U 900 378 156 09 | hexagon-head bolt<br>M 6 X 20 | | 8 | |
| (19) | 999 217 150 09 | hexagon-head bolt<br>M 6 X 20 | | 8 | |
| 20 | A 996 107 025 05 | heat exchanger | -97 | 1 | M 96.20 |
| 20 | 996 107 025 07 | heat exchanger | | 1 | M 96.20/22<br>M 96.23 |
| 20 | 996 107 025 57 | heat exchanger | | 1 | M 96.21/24 |
| 21 | 999 707 409 40 | o-ring<br>26 X 3 | | 2 | |
| 22 | 999 707 389 40 | o-ring<br>35 X 4 | | 4 | |
| (22) | 999 707 344 40 | o-ring<br>18,77 X 1,78<br>see technical information<br>group<br>1<br>NR. 8/97 | | 2 | |
| 23 | 900 067 269 09 | pan-head screw<br>M 6 X 16 | | 4 | |
| 23 | 900 067 354 02 | pan-head screw<br>M 6 X 25 | | 4 | |
| 24 | 996 106 103 50 | dowel sleeve<br>8,2 X 7 | | 2 | |
| 25 | 996 107 127 53 | spring | | 1 | |
| 26 | 996 107 125 51 | piston | | 1 | |
| 27 | 996 107 212 52 | lid<br>for<br>996 107 012 54 | | 1 | |
| 27 | 996 107 212 53 | lid<br>for<br>996 107 012 55/56 | | 1 | |
| 27 | 996 107 212 54 | lid<br>for<br>996 107 012 57/58 | | 1 | |
| 28 | 900 075 333 02 | hexagon-head bolt<br>M 6 X 25 | | 7 | |
| (29) | 996 606 410 00 | temperature sensor | | 1 | M 96.21/22<br>M 96.23/24 |
| 29 | 996 606 405 01 | temperature sensor | | 1 | M 96.20 |
| - | 999 650 168 40 | plug socket | | 1 | |
| - | 999 650 214 12 | connector | | 4 | |
| - | 999 650 215 40 | gasket | | 4 | |
| 30 | - | sealing ring<br>see technical information<br>group<br>1<br>NR. 8 A/97 | | 1 | |
| 31 | 900 378 151 09 | hexagon-head bolt<br>M 6 X 70 | | 2 | |
| 32 | 996 106 249 00 | breather hose | | 1 | |
| 33 | 996 106 255 00 | flat connector | | 1 | |
| 34 | 999 512 584 09 | hose clamp<br>14 X 12 | -98 | 2 | |
| 34 | 999 512 650 09 | hose clamp<br>14 X 12 | 99- | 2 | |
| 35 | 996 107 129 00 | intermediate plate | | 1 | |
| 36 | 999 707 193 40 | o-ring<br>28 X 2,5 | | 4 | |
| 37 | 996 107 119 00 | stopper | | 1 | |
| 38 | 900 378 098 09 | hexagon-head bolt<br>AM 10 X 60 | | 1 | |
| 39 | A 996 102 235 00 | clip | | 1 | M 573 |
| 39 | 996 102 235 01 | clip | | 1 | M 573 |

| Model | Year | MG | SG | Illustration | Restrictions | UPD | 18:06 | 30.07.2008 | PET |
|---|---|---|---|---|---|---|---|---|---|
| 986 | 2004 | 1 | 04 | 104-05 | | 229 | | | |

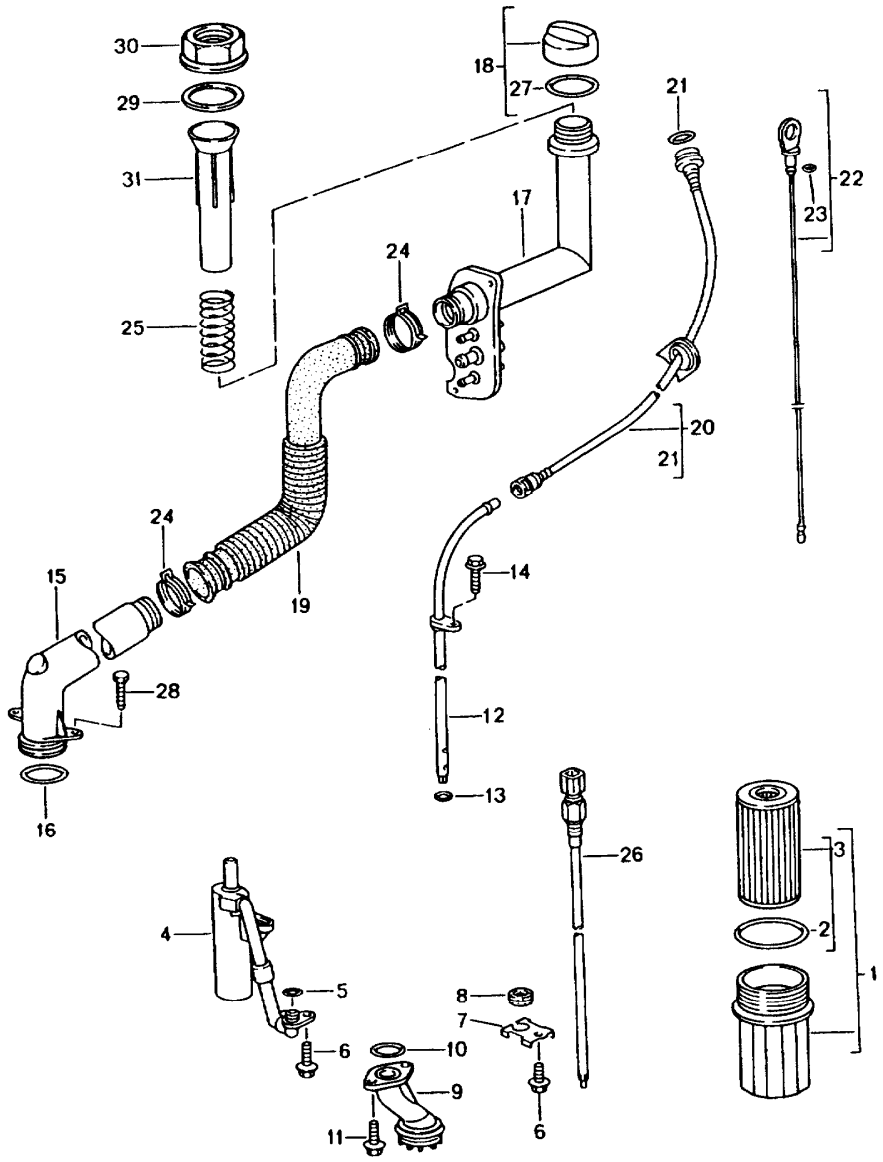


| Pos | Part Number | Description | Remark | Qty | Model |
|---|---|---|---|---|---|
| | | engine lubrication | | | |
| 1 | A 996 107 020 53 | oil filter | | 1 | |
| 1 | 996 107 020 54 | oil filter | | 1 | |
| 2 | 996 107 313 51 | sealing ring<br>use also:<br>grease<br>999 917 788 00 | | 1<br><br><br>1 | |
| 3 | 996 107 225 60 | filter element | | 1 | |
| 4 | 996 107 080 54 | oil separator | | 2 | |
| 5 | 999 701 789 40 | o-ring<br>12 X 2 | | 2 | |
| 6 | 900 378 036 09 | hexagon-head bolt<br>M 6 X 12 | | 5 | |
| 7 | 996 107 333 50 | support | | 1 | |
| 8 | 999 702 206 50 | grommet<br>9,5 X 18,0 X 1,2 | | 1 | |
| 9 | 996 107 075 57 | suction tube | | 1 | |
| 10 | 999 707 375 40 | o-ring<br>30 X 3 | | 1 | |
| 11 | 900 378 030 09 | hexagon-head bolt<br>M 6 X 20 | | 2 | |
| 12 | 996 107 113 03 | guide tube | | 1 | |
| 13 | 999 707 369 40 | o-ring<br>9,5 X 3,5<br>use also:<br>grease<br>999 917 788 00 | | 1<br><br><br>1 | |
| 14 | 900 378 035 01 | hexagon-head bolt<br>M 6 X 16 | | 1 | |
| 15 | 996 107 150 02 | oil tube | -97 | 1 | |
| 15 | 996 107 150 03 | oil tube | 98- | 1 | |
| 15 | 996 107 150 05 | oil tube | - | 1 | |
| 16 | 999 707 348 40 | o-ring<br>42 X 4<br>use also:<br>grease<br>999 917 788 00 | | 1<br><br><br>1 | |

| Pos | Part Number | Description | Remark | Qty | Model |
|---|---|---|---|---|---|
| 17 | 996 107 273 04 | filler tube<br>for<br>model year<br>97<br>use also: | | 1 | |
| -- | 996 106 287 01 | overflow hose | | 1 | |
| -- | 996 106 297 01 | overflow hose | | 1 | |
| -- | 996 106 207 03 | hose | | 1 | |
| 18 | A 996 107 035 50 | lid | | 1 | |
| (18) | 996 107 035 51 | lid | | 1 | |
| 19 | 996 107 254 03 | oil hose | | 1 | |
| 20 | 996 107 183 03 | guide tube | | 1 | |
| 21 | 999 707 385 40 | o-ring<br>19,8 X 3,53 | | 1 | |
| 22 | 996 107 014 02 | oil level dipstick | | 1 | |
| 23 | 999 707 366 40 | o-ring<br>8 X 1,8 | | 1 | |
| 24 | 999 512 612 09 | hose clamp<br>44 X 12 | -98 | 2 | |
| 24 | 999 512 667 09 | hose clamp<br>44 X 12 | 99- | 2 | |
| 25 | 996 107 343 00 | spring | | 1 | |
| 26 | 996 606 150 00 | oil-level sender | | 1 | |
| - | 999 650 168 40 | plug socket | | 1 | |
| - | 999 650 214 12 | connector | | 4 | |
| - | 999 650 215 40 | gasket | | 4 | |
| 27 | A 999 707 285 40 | o-ring<br>51 X 4,5 | | 1 | |
| (27) | 996 107 336 00 | gasket | | 1 | |
| 28 | 900 378 163 09 | hexagon-head bolt<br>M 6 X 16 | | 2 | |
| 29 | 996 107 303 00 | gasket | | 1 | |
| 30 | 996 107 367 00 | lock nut | | 1 | |
| 31 | 996 107 323 00 | funnel | | 1 | |

| Pos | Part Number | Description | Remark | Qty | Model |
|---|---|---|---|---|---|

| Model | Year | MG | SG | Illustration | Restrictions | UPD | 18:06 | 30.07.2008 | PET |
|---|---|---|---|---|---|---|---|---|---|
| 986 | 2004 | 1 | 04 | 104-10 | | 229 | | | |

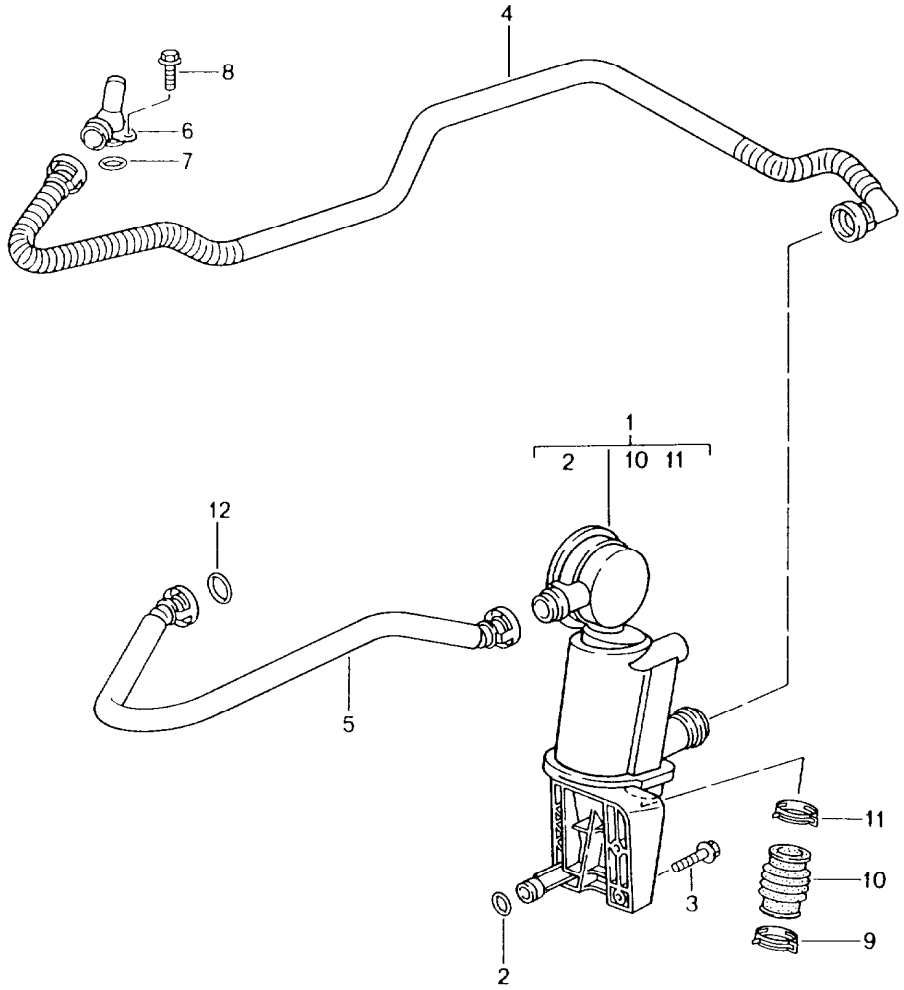


| Pos | Part Number | Description | Remark | Qty | Model |
|---|---|---|---|---|---|
| | | crankcase bleeding | | | |
| (1) | A 996 107 231 55 | oil separator | | 1 | |
| (1) | A 996 107 023 51 | oil separator | -97 | 1 | |
| 1 | 996 107 023 01 | oil separator | -98 | 1 | |
| 1 | U 996 107 023 02 | oil separator | 99- | 1 | |
| 1 | A 996 107 023 03 | oil separator | 99- | 1 | |
| 1 | 996 107 023 04 | oil separator | 99- | 1 | |
| 1 | U 996 107 026 00 | oil separator | 03- | 1 | |
| 1 | 996 107 026 01 | oil separator | 03- | 1 | |
| 2 | A 999 707 256 40 | o-ring 14 X 1,78 | -99 | 1 | |
| (2) | 996 107 122 00 | sealing ring | 99- | 1 | |
| 3 | 900 378 177 09 | hexagon-head bolt M 6 X 30 | | 2 | |
| 4 | A 996 107 147 53 | breather hose | | 1 | |
| 4 | 996 107 147 54 | breather hose | | 1 | |
| 4 | 996 107 147 55 | breather hose | -02 | 1 | |
| (4) | 996 107 147 58 | vent line | 03- | 1 | |
| 5 | 996 107 145 05 | breather hose M >> 65X 01419 | | 1 | M 96.20 |
| 5 | 996 107 145 06 | vent line M 65X 01420 >> | | 1 | M 96.20 |
| (5) | 996 107 146 00 | vent line | | 1 | M 96.21/22 M 96.23/24 |
| 6 | 996 107 047 51 | connection piece | -02 | 1 | |
| (6) | 996 107 047 00 | connection piece | 03- | 1 | |
| 7 | 999 707 154 40 | o-ring 18,77 X 1,78 | | 1 | |
| 8 | 900 378 163 09 | hexagon-head bolt M 6 X 16 | | 1 | |
| 9 | 999 512 630 00 | hose clamp 32 X 12 | | 1 | |

| Pos | Part Number | Description | Remark | Qty | Model |
|---|---|---|---|---|---|
| 10 | A 996 107 237 51 | bellows | | 1 | |
| (10) | 996 107 237 52 | bellows | | 1 | |
| 11 | 999 512 607 09 | hose clamp<br>30 X 12 | -98 | 1 | |
| 11 | 999 512 551 00 | hose clamp<br>30 X 12 | 99- | 1 | |
| 12 | 999 707 446 40 | o-ring<br>18,0 X 2,5 | | 4 | |

| Pos | Part Number | Description | Remark | Qty | Model |
|---|---|---|---|---|---|

| Model | Year | MG | SG | Illustration | Restrictions | UPD | 18:06 | 30.07.2008 |
|---|---|---|---|---|---|---|---|---|
| 986 | 2004 | 1 | 05 | 105-00 | | 229 | | |

PORSCHE PET PORSCHE

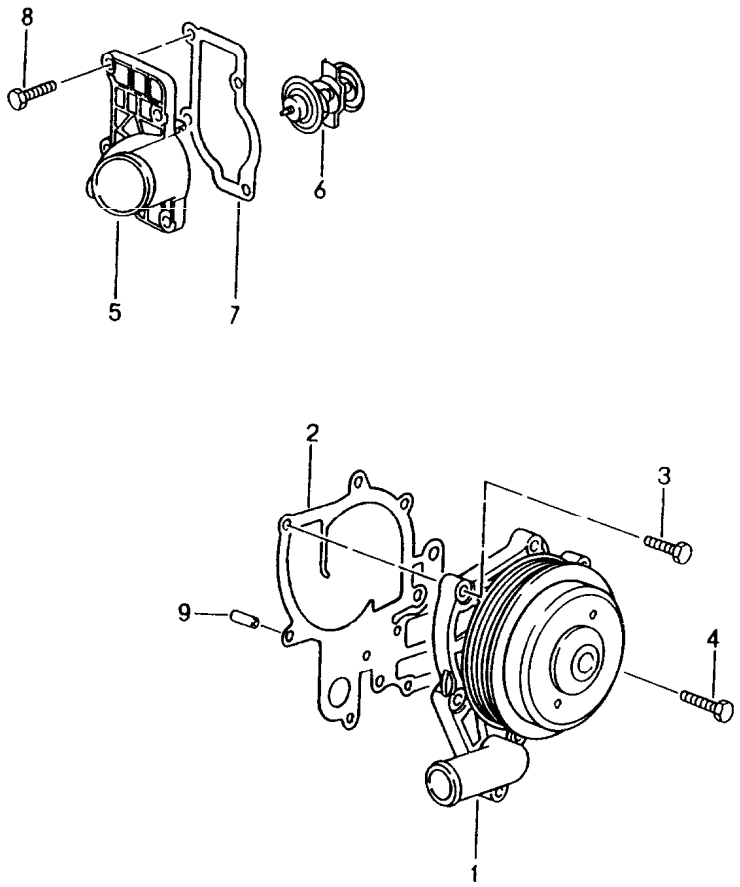


| Pos | Part Number | Description | Remark | Qty | Model |
|---|---|---|---|---|---|
| | | water pump<br>thermostat housing | | | |
| 1 | 996 106 011 53 | water pump | -98 | 1 | |
| 1 | 996 106 011 53 | water pump | 99- | 1 | |
| 2 | 996 106 340 51 | gasket | | 1 | |
| 3 | 900 378 013 09 | hexagon-head bolt<br>M 6 X 25 | | 5 | |
| 4 | 900 378 177 09 | hexagon-head bolt<br>AM 6 X 30 | | 2 | |
| 5 | 996 106 121 53 | lid | | 1 | |
| 6 | 996 106 125 52 | thermostat insert | | 1 | |
| 7 | 996 106 326 50 | gasket | | 1 | |
| 8 | 900 378 030 09 | hexagon-head bolt<br>M 6 X 20 | | 4 | |
| 9 | 996 106 103 50 | dowel sleeve<br>8,2 X 7 | | 2 | |

| Model | Year | MG | SG | Illustration | Restrictions | UPD | 18:06 | 30.07.2008 | PET |
|---|---|---|---|---|---|---|---|---|---|
| 986 | 2004 | 1 | 05 | 105-05 | | 229 | | | |

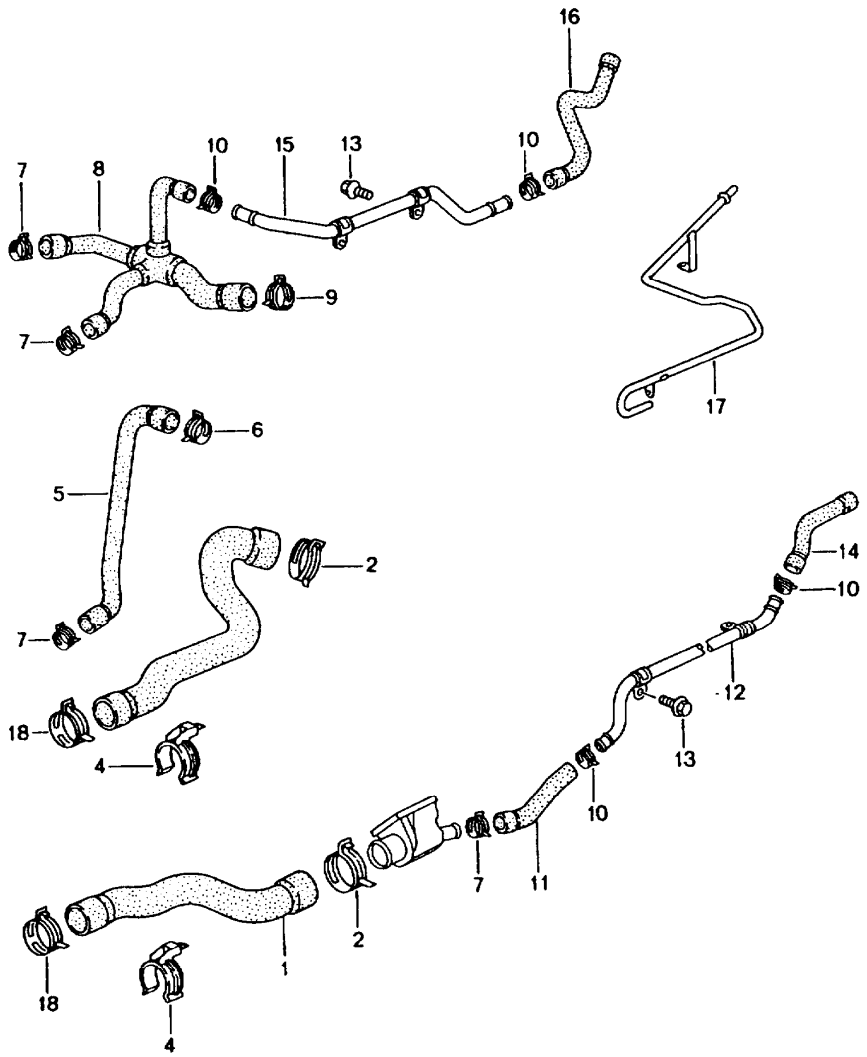


| Pos | Part Number | Description | Remark | Qty | Model |
|---|---|---|---|---|---|
| | | water cooling 1 | | | |
| 1 | 996 106 501 03 | hose | -98 | 1 | |
| 1 U | 996 106 501 04 | hose | | 1 | |
| 1 | 996 106 501 05 | hose | 99- | 1 | |
| 2 | 999 512 594 09 | hose clamp<br>53 X 12 | -98 | 2 | |
| 2 | 999 512 669 09 | hose clamp<br>53 X 12 | 99- | 2 | |
| 2 | 999 512 348 02 | hose clamp<br>40 - 70 MM | | 2 | |
| 3 | 996 106 502 03 | hose | -98 | 1 | |
| 3 | 996 106 502 04 | hose | 99- | 1 | |
| 4 | 996 106 425 02 | support | | 2 | |
| 5 | 996 106 212 03 | hose | -98 | 1 | |
| 5 | 996 106 212 04 | hose | -99 | 1 | M 96.20 |
| 5 | 996 106 212 04 | hose | 00- | 1 | M 480/481 |
| 5 | 996 106 212 06 | hose | 00- | 1 | M 249 |
| 6 | 999 512 606 09 | hose clamp<br>29 X 12 | -98 | 1 | |
| 6 | 999 512 660 09 | hose clamp<br>29 X 12 | 99- | 1 | |
| 6 | 999 512 551 00 | hose clamp<br>25 - 40 MM | 03- | 1 | |
| 7 | 999 512 589 09 | hose clamp<br>25 X 12 | -98 | 4 | |
| 7 | 999 512 656 09 | hose clamp<br>25 X 12 | 99- | 4 | |
| 7 | 999 512 552 00 | hose clamp<br>24 X 12 | 03- | 4 | |
| (8) | 996 106 222 07 | hose | -98 | 1 | |
| (8) A | 996 106 222 10 | hose | -98 | 1 | |
| (8) | 996 106 222 12 | hose | 99- | 1 | |
| 8 | 996 106 222 09 | hose | -98 | 1 | M 249 |

| Pos | Part Number | Description | Remark | Qty | Model |
|---|---|---|---|---|---|
| 8 | A 996 106 222 11 | hose | -98 | 1 | M 249 |
| 8 | 996 106 222 13 | hose | -99 | 1 | M 249 |
| (8) | 996 106 522 02 | hose | 00- | 1 | M 249 |
| 9 | 999 512 609 09 | hose clamp<br>36 X 12 | -98 | 1 | |
| 9 | 999 512 664 09 | hose clamp<br>36 X 12 | 99- | 1 | |
| 10 | 999 512 587 09 | hose clamp<br>21 X 12 | -98 | 6 | M 249 |
| 10 | 996 106 552 00 | hose clamp<br>21 X 12 | 99- | 6 | M 249 |
| 11 | 996 106 552 00 | hose | -98 | 1 | |
| 11 | 996 106 552 01 | hose | 99- | 1 | |
| 12 | 996 106 655 02 | line | -99 | 1 | M 249 |
| (12) | 996 106 674 01 | line | 00- | 1 | M 249 |
| 13 | 900 378 036 09 | hexagon-head bolt<br>M 6 X 12 | | 4 | M 249 |
| 14 | 996 106 555 00 | hose | -98 | 1 | M 249 |
| 14 | 996 106 555 01 | hose | 99- | 1 | M 249 |
| 15 | 996 106 657 03 | line | -99 | 1 | M 249 |
| (15) | 996 106 672 01 | line | 00- | 1 | M 249 |
| 16 | 996 106 557 01 | hose | -98 | 1 | M 249 |
| 16 | 996 106 557 02 | hose | 99- | 1 | M 249 |
| 17 | 996 106 210 02 | vent line | | 1 | |
| 18 | 999 512 668 09 | hose clamp<br>49 X 12 | | 2 | |

| Pos | Part Number | Description | Remark | Qty | Model |
|---|---|---|---|---|---|

| Model | Year | MG | SG | Illustration | Restrictions | UPD | 18:07 | 30.07.2008 | PET |
|---|---|---|---|---|---|---|---|---|---|
| 986 | 2004 | 1 | 05 | 105-10 | | 229 | | | |

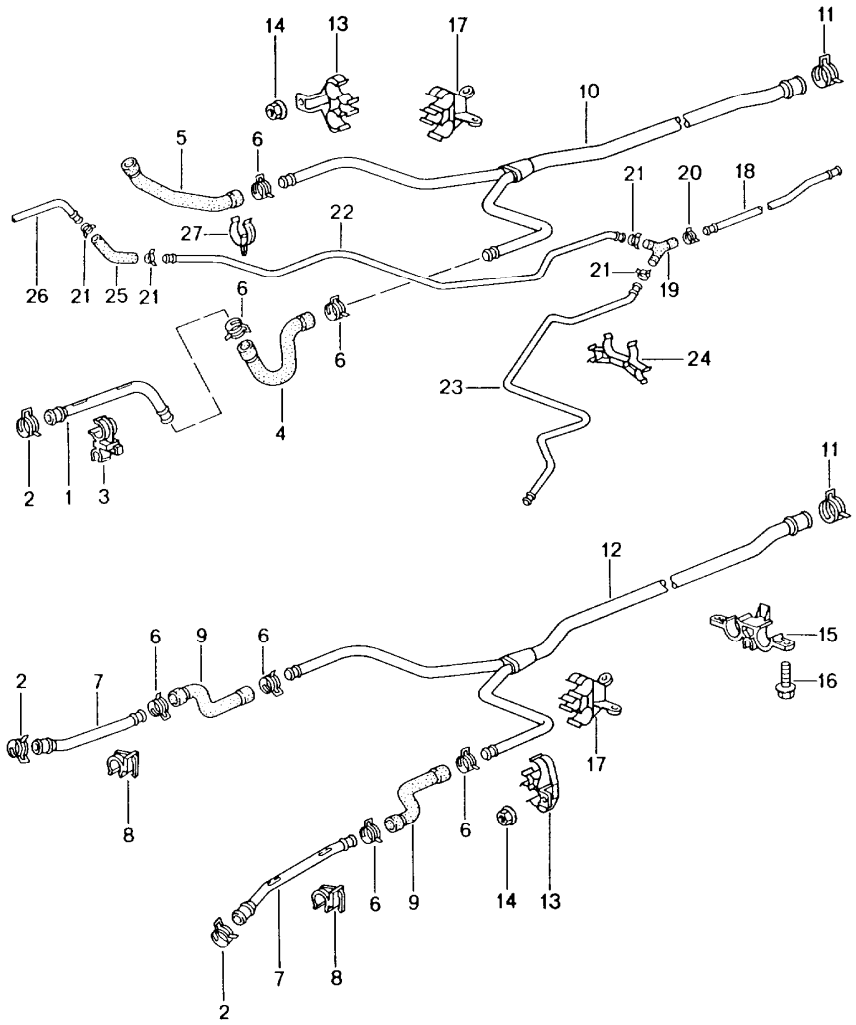


| Pos | Part Number | Description | Remark | Qty | Model |
|---|---|---|---|---|---|
| | | water cooling 2 | | | |
| 1 | 996 106 611 00 | water tube | | 2 | |
| 1 | 996 106 611 01 | water tube | 03- | 2 | |
| (1) | 996 106 611 53 | water tube supply | | 2 | M 008 |
| 2 | A 999 512 634 09 | hose clamp 34 X 12 | -97 | 4 | |
| 2 | 999 512 640 09 | hose clamp 34 X 12 | -98 | 4 | |
| 2 | 999 512 671 09 | hose clamp 34 X 12 | 99- | 4 | |
| 2 | 999 512 551 00 | hose clamp 25 - 40 MM | | 4 | |
| 3 | 996 106 414 03 | support | | 4 | |
| 3 | 996 106 414 04 | support | | 4 | |
| (3) | 996 106 414 55 | support | | 4 | M 96.21 |
| 4 | A 996 106 623 01 | hose supply | /L -98 | 1 | |
| 4 | 996 106 623 02 | hose supply | /L -00 | 1 | M 96.20/22 |
| 4 | 996 106 623 02 | hose | /L 01- | 1 | M 009/480 |
| (4) | 996 106 623 53 | water hose | /L 01- | 1 | M 009/249 |
| (4) | 996 106 623 53 | water hose supply | /L 99- | 1 | M 008 |
| 5 | A 996 106 624 01 | hose supply | /R -98 | 1 | |
| 5 | 996 106 624 02 | hose supply | /R -00 | 1 | M 96.20/22 |
| 5 | 996 106 624 02 | hose | /R 01- | 1 | M 009/480 |
| (5) | 996 106 624 53 | water hose | /R 01- | 1 | M 009/249 |
| (5) | 996 106 624 53 | water hose supply | /R 99- | 1 | M 008 |
| 6 | 999 512 607 09 | hose clamp 30 X 12 | -98 | 10 | |

| Pos | Part Number | Description | Remark | Qty | Model |
|---|---|---|---|---|---|
| 6 | 999 512 661 09 | hose clamp<br>30 X 12 | 99- | 10 | |
| 6 | 999 512 672 09 | hose clamp<br>40 X 12 | 01- | 10 | M 009/249 |
| 6 | 999 512 499 00 | hose clamp<br>32 - 50 MM | 99- | 10 | M 008 |
| 7 | 996 106 615 01 | water tube<br>return line | | 2 | |
| 7 | 996 106 615 02 | water tube<br>return line | 03- | 2 | |
| (7) | 996 106 615 54 | water tube<br>return line | | 2 | M 008 |
| 8 | 996 106 419 02 | support | | 4 | |
| (8) | 996 106 419 52 | support | 00-<br>01- | 4 | M 008<br>M 009/249 |
| 9 | 996 106 627 01 | water hose | -98 | 2 | |
| 9 | 996 106 627 02 | water hose | 99- | 2 | |
| (9) | 996 106 627 52 | water hose | | 2 | M 008 |
| (9) | 996 106 627 52 | water hose | 01- | 2 | M 009/249 |
| 10 | 996 106 651 02 | distributing piece | -98 | 1 | |
| 10 A | 996 106 651 03 | distributing piece | 99- | 1 | |
| 10 | 996 106 651 04 | distributing piece | | 1 | M 009/481 |
| (10) | 996 106 651 54 | distributing piece | | 1 | M 008<br>M 009/249 |
| 11 | 999 512 593 09 | hose clamp<br>49 X 12 | -98 | 2 | |
| 11 | 999 512 668 09 | hose clamp<br>49 X 12 | 99- | 2 | |
| 11 | 999 512 348 02 | hose clamp<br>40 - 60 MM | | 2 | |
| 12 | 996 106 652 02 | distributing piece<br>return line | -98 | 1 | |
| 12 | 996 106 652 03 | distributing piece<br>return line | 99- | 1 | |
| 12 | 996 106 652 04 | distributing piece<br>return line | 03- | 1 | |
| (12) | 996 106 652 54 | distributing piece<br>return line | | 1 | |
| 13 | 996 106 413 01 | support | | 2 | |
| (13) | 996 106 413 52 | support | 00-<br>01- | 2 | M 008<br>M 009/249 |
| 14 | 999 084 629 09 | hexagon nut<br>M 6 | | 2 | |
| 15 | 996 106 415 02 | support | | 2 | |
| 16 | 900 378 035 01 | hexagon-head bolt<br>M 6 X 16 | | 6 | |
| 17 | 996 106 420 02 | support | | 2 | |
| (17) | 996 106 420 52 | support | 00-<br>01- | 2 | M 008<br>M 009/249 |
| 18 | 996 106 127 51 | vent line | -98 | 1 | |
| 18 | 996 106 127 52 | vent line | 99- | 1 | |
| 18 | 996 106 127 53 | vent line | 03- | 1 | |
| 19 | 996 106 546 51 | y-piece | -98 | 1 | |
| 19 | 996 106 546 52 | y-piece | 99- | 1 | |
| 19 | 996 106 546 54 | y-piece | | 1 | |
| 20 | 999 512 586 09 | hose clamp<br>20 X 12 | -98 | 1 | |
| 20 | 999 512 653 09 | hose clamp<br>20 X 12 | 99- | 1 | |
| 21 | 999 512 584 09 | hose clamp<br>14 X 12 | -98 | 8 | |
| 21 | 999 512 650 09 | hose clamp<br>14 X 12 | | 8 | |
| 21 | 999 512 554 00 | hose clamp<br>12 - 22 MM | 99- | 8 | |
| 22 | 996 106 126 53 | vent line | /R | 1 | |
| 22 | 996 106 126 54 | vent line | /R | 1 | |
| 23 | 996 106 225 53 | vent line | /L | 1 | |
| 23 | 996 106 225 54 | vent line | /L | 1 | |
| 24 | 996 106 412 00 | support | | 1 | |

| Pos | Part Number | Description | Remark | Qty | Model |
|---|---|---|---|---|---|
| 25 | 996 106 135 51 | breather hose | -98 | 2 | |
| 25 | 996 106 135 52 | breather hose | 99- | 2 | |
| 26 | 996 106 685 52 | vent line | | 2 | |
| 26 | 996 106 685 53 | vent line | | 2 | |
| 27 | 999 507 378 40 | support | | 2 | |
| -- | 996 106 425 03 | support<br>engine<br>water hose | 01- | 2 | |

| Model | Year | MG | SG | Illustration | Restrictions | UPD | 18:07 | 30.07.2008 | PET |
|---|---|---|---|---|---|---|---|---|---|
| 986 | 2004 | 1 | 05 | 105-15 | | 229 | | | |

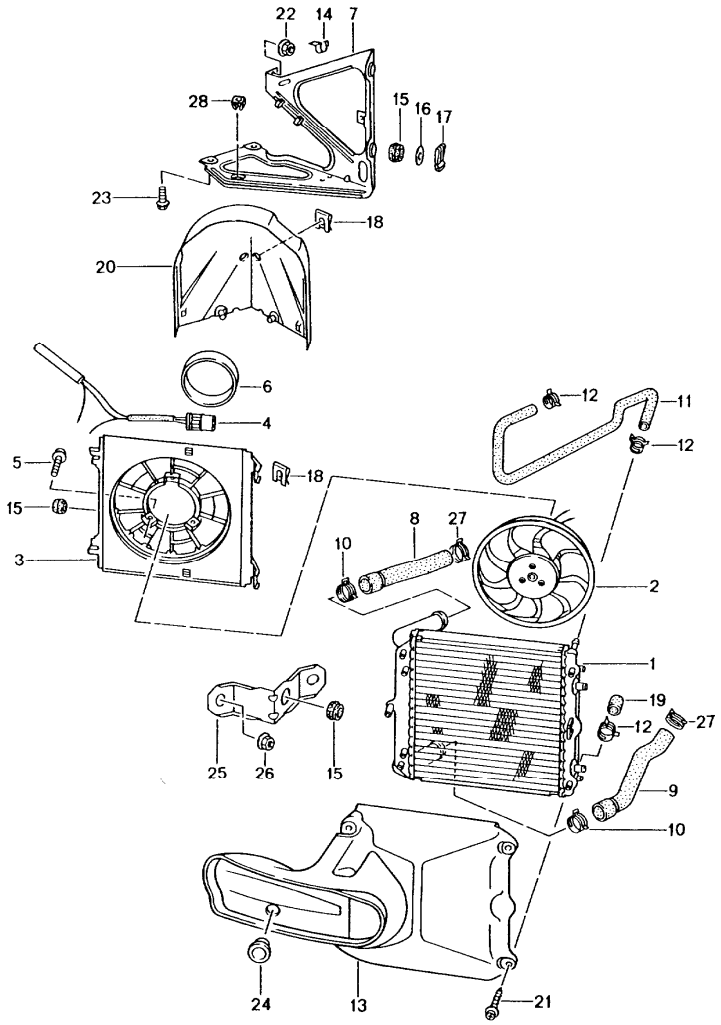


| Pos | Part Number | Description | Remark | Qty | Model |
|---|---|---|---|---|---|
| | | water cooling 3 | | | |
| 1 | A 996 106 131 50 | radiator | | 2 | |
| (1) | 996 106 131 51 | radiator | /L | 1 | |
| (1) | 996 106 132 51 | radiator | /R | 1 | |
| 2 | 996 624 135 00 | fan | | 2 | |
| - | 999 652 936 40 | plug socket | | 2 | |
| - | 999 652 776 22 | connector | | 6 | |
| - | 999 652 778 40 | gasket | | 6 | |
| - | 999 652 811 40 | stopper | | 2 | |
| 3 | 996 624 131 00 | air box | | 2 | |
| 4 | 996 616 101 00 | series resistor | | 2 | |
| 5 | 900 146 116 09 | screw<br>M 5 X 16 | | 6 | |
| 6 | 996 624 136 00 | protection cap | | 2 | |
| 7 | 996 504 175 03 | bracket | /L -97 | 1 | |
| 7 | 996 504 175 04 | bracket | /L 98- | 1 | |
| 7 | 996 504 175 09 | bracket | | 1 | |
| (7) | 996 504 176 03 | bracket | /R -97 | 1 | |
| (7) | 996 504 176 04 | bracket | /R 98- | 1 | |
| (7) | 996 504 176 09 | bracket | | 1 | |
| 8 | 996 106 621 01 | hose<br>supply | /L -98 | 1 | |
| 8 | 996 106 621 02 | hose<br>supply | /L 99- | 1 | |
| (8) | 996 106 665 53 | hose<br>supply<br>with one conection<br>radiator<br>centre | | 1 | |
| (8) | 996 106 665 55 | hose<br>supply<br>with one conection<br>radiator<br>centre | /L 00- | 1 | M 008 |

| Pos | Part Number | Description | Remark | Qty | Model |
|---|---|---|---|---|---|
| (8) | 996 106 622 00 | hose<br>supply | /R -98 | 1 | |
| (8) | 996 106 622 01 | hose<br>supply | /R 99- | 1 | |
| (8) | 996 106 622 52 | hose<br>supply | /R 00- | 1 | M 008 |
| 9 | 996 106 625 01 | hose<br>return line | /L -98 | 1 | |
| 9 | 996 106 625 02 | hose<br>return line | /L 99- | 1 | |
| (9) | 996 106 625 54 | hose<br>return line | /L 00- | 1 | M 008 |
| (9) | 996 106 666 51 | hose<br>return line<br>with one conection<br>radiator<br>centre | /R 00- | 1 | M 008 |
| (9) | 996 106 666 52 | hose<br>return line<br>with one conection<br>radiator<br>centre | | 1 | |
| (9) | 996 106 626 00 | hose<br>return line | /R -98 | 1 | |
| (9) | 996 106 626 01 | hose<br>return line | /R 99- | 1 | |
| 10 | 999 512 611 09 | hose clamp<br>42 X 12 | -98 | 4 | |
| 10 | 999 512 666 09 | hose clamp<br>42 X 12 | 99- | 4 | |
| 10 | 999 512 499 00 | hose clamp<br>32 - 50 MM | | 4 | |
| 11 | 996 106 137 53 | breather hose | /L | 1 | |
| (11) | 996 106 138 53 | breather hose | /R | 1 | |
| 12 | 999 512 585 09 | hose clamp<br>15 X 12 | | 6 | |
| 13 | 996 575 321 00 | air duct | /L | 1 | |
| (13) | 996 575 322 00 | air duct | /R | 1 | |
| 14 | 999 651 305 02 | cable holder | | 2 | |
| 15 | 999 702 214 40 | grommet<br>14 X 20,5 X 7,5 | | 6 | |
| 16 | 999 025 255 02 | washer | | 4 | |
| 17 | 999 166 083 09 | tab washer<br>B 25 | | 4 | |
| 18 | 999 166 077 02 | safety clip<br>B 22 | | 6 | |
| 19 | U 999 703 418 40 | rubber cap | | 2 | |
| (19) | 996 106 334 00 | rubber cap | | 2 | |
| 20 | 996 575 341 03 | air duct | -98 | 2 | |
| 20 | 996 575 341 04 | air duct | /L 99- | 1 | |
| (20) | 996 575 342 00 | air duct | /R 99- | 1 | |
| 21 | 999 919 134 09 | oval-head screw<br>6,0 X 16 | | 14 | |
| 22 | 999 084 630 09 | hexagon nut<br>M 8 | | 2 | |
| 23 | 900 378 074 09 | hexagon-head bolt<br>M 8 X 16 | | 4 | |
| 24 | 803 803 583 | lid<br>30,0 X 40,0 | /R | 1 | |
| 25 | 996 504 721 00 | support | | 1 | |
| | GRV | prime coated | | | |
| 26 | 900 377 003 02 | hexagon nut<br>M 8 | | 4 | |
| 27 | 999 512 659 09 | hose clamp<br>28 X 12 | | 2 | |
| 27 | 999 512 552 00 | hose clamp | | 1 | |
| 28 | 999 507 590 02 | captive nut | | 1 | |

| Model | Year | MG | SG | Illustration | Restrictions | UPD | 18:07 | 30.07.2008 |
|---|---|---|---|---|---|---|---|---|
| 986 | 2004 | 1 | 05 | 105-17 | | 229 | | |

PORSCHE PET PORSCHE

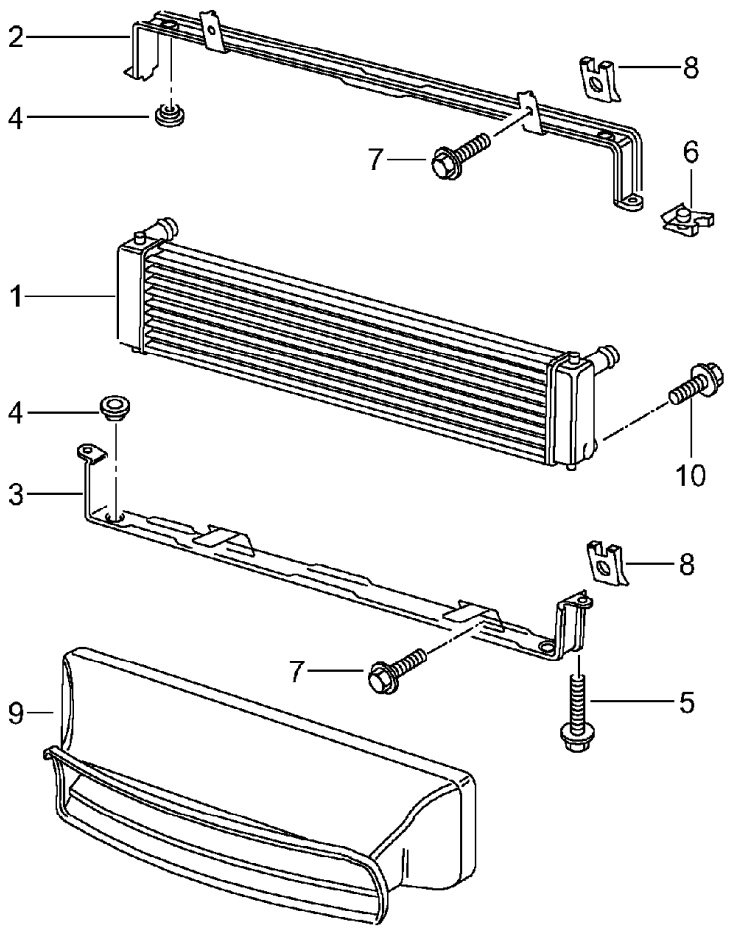


| Pos | Part Number | Description | Remark | Qty | Model |
|---|---|---|---|---|---|
| | | radiator centre | 00- | | M 008 |
| 1 | 996 106 037 50 | radiator | | 1 | |
| 1 | 996 106 037 51 | radiator | | 1 | |
| 2 | 996 504 487 02 | retaining frame | | 1 | |
| 3 | 996 504 485 02 | retaining frame | | 1 | |
| 4 | 930 113 430 00 | rubber mounting | | 4 | |
| 5 | 900 378 036 09 | hexagon-head bolt M 6 X 12 | | 2 | |
| 6 | 999 507 550 02 | speed nut M 6 | | 2 | |
| 7 | 900 378 074 09 | hexagon-head bolt M 8 X 16 | | 4 | |
| 8 | 999 591 869 02 | speed nut M 8 | | 4 | |
| 9 | 996 575 141 02 | air duct | | 1 | |
| 10 | 996 106 901 00 | screw plug | | 1 | |

| Model | Year | MG | SG | Illustration | Restrictions | UPD | 18:07 | 30.07.2008 |
|---|---|---|---|---|---|---|---|---|
| 986 | 2004 | 1 | 05 | 105-20 | | 229 | | |

PORSCHE PET PORSCHE

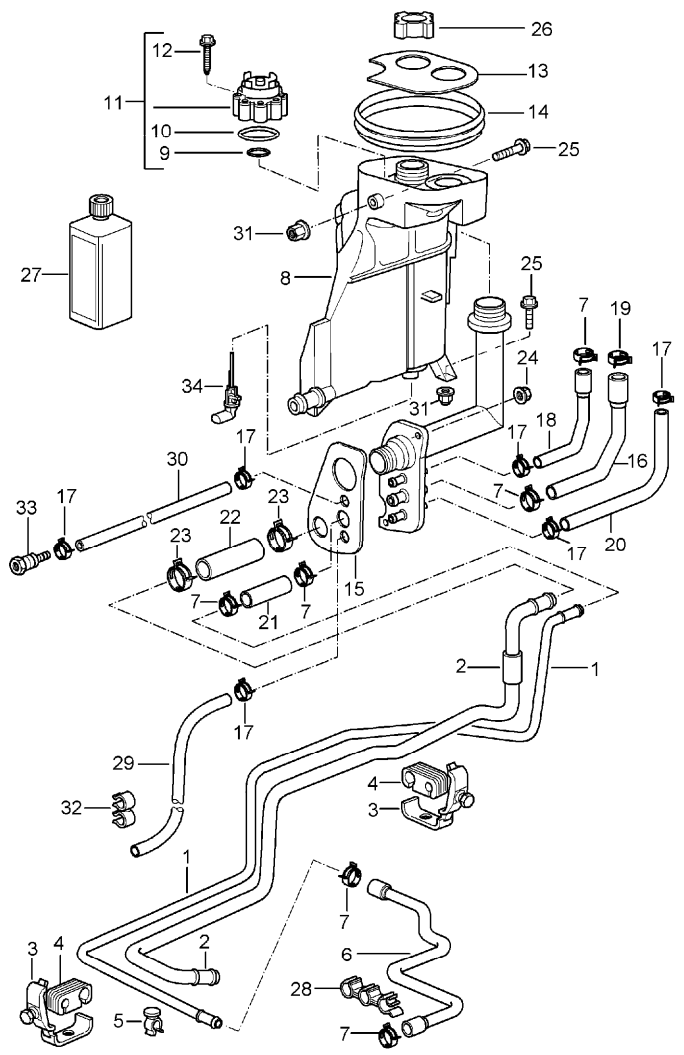


| Pos | Part Number | Description | Remark | Qty | Model |
|---|---|---|---|---|---|
| | | water cooling 4 | | | |
| 1 | 996 106 681 01 | vent line | -98 | 1 | |
| 1 | 996 106 681 02 | vent line | 99- | 1 | |
| 1 | 996 106 681 03 | vent line | | 1 | |
| 2 | 996 106 663 00 | filler tube | -98 | 1 | |
| 2 | 996 106 663 01 | filler tube | 99- | 1 | |
| 2 | 996 106 663 02 | filler tube | | 1 | |
| 3 | 999 511 230 40 | cable holder | | 2 | |
| 4 | 999 511 231 41 | rubber mounting | | 2 | |
| 5 | 999 507 500 40 | cable holder | | 1 | |
| 6 | 996 106 135 01 | breather hose | -98 | 1 | |
| 6 | 996 106 135 02 | breather hose | 99- | 1 | |
| 7 | 999 512 653 09 | hose clamp<br>20 X 12 | | 6 | |
| 7 | 999 512 554 00 | hose clamp<br>20 X 12 | | 6 | |
| 8 | A 996 106 147 03 | expansion tank | -97 | 1 | |
| 8 | A 996 106 147 04 | expansion tank | -98 | 1 | |
| 8 | 996 106 147 06 | expansion tank | | 1 | |
| 8 | 996 106 147 07 | expansion tank | | 1 | |
| 9 | 999 707 371 40 | o-ring<br>17 X 4 | | 1 | |
| 10 | 999 707 370 40 | o-ring<br>47 X 4 | | 1 | |
| 11 | 996 106 347 00 | bleeder valve | -97 | 1 | |
| 11 | 996 106 347 01 | bleeder valve | 98- | 1 | |
| 12 | 999 919 058 02 | hexagon-head bolt<br>5,0 X 40 | | 8 | |
| 13 | 996 106 234 01 | cover | | 1 | |
| 14 | 986 504 644 00 | gasket | | 1 | |
| 15 | 996 106 235 01 | gasket | -97 | 1 | |

| Pos | Part Number | Description | Remark | Qty | Model |
|---|---|---|---|---|---|
| 15 | 996 106 235 02 | gasket | 98- | 1 | |
| 16 | 996 106 237 00 | hose | | 1 | |
| 17 | 999 512 585 09 | hose clamp<br>15 X 12 | | 5 | |
| 18 | 996 106 247 00 | hose | | 1 | |
| 19 | 999 512 587 09 | hose clamp<br>21 X 12 | -98 | 1 | |
| 19 | 999 512 654 09 | hose clamp<br>21 X 12 | 99- | 1 | |
| 20 A | 996 106 287 00 | overflow hose | -97 | 1 | |
| 20 | 996 106 287 01 | overflow hose<br>for<br>model year<br>97<br>use also: | 97- | 1 | |
| -- | 996 107 273 04 | filler tube | | 1 | |
| -- | 996 106 297 01 | overflow hose | | 1 | |
| -- | 996 106 207 03 | hose | | 1 | |
| 21 | 996 106 257 00 | breather hose | | 1 | |
| 22 | 996 106 267 00 | hose | | 1 | |
| 23 | 999 512 552 00 | hose clamp<br>27 X 12 | | 2 | |
| 24 | 999 084 629 09 | hexagon nut<br>M 6 | | 2 | |
| 25 | 900 075 333 02 | hexagon-head bolt<br>M 6 X 25 | | 2 | |
| 26 | 443 121 321 | lid | -97 | 1 | |
| 26 | 996 106 447 00 | lid | 98- | 1 | |
| 26 | 996 106 447 01 | lid | | 1 | |
| 27 | 000 043 203 78 | antifreeze<br>1 LTR.<br>container | | X | |
| (27) A | 000 043 203 79 | antifreeze<br>25 LTR.<br>container | | X | |
| (27) | 000 043 300 31 | antifreeze<br>20 LTR.<br>container | | X | |
| 28 | 996 106 411 01 | support | -97 | 1 | |
| 28 | 996 106 411 02 | support | 98- | 1 | |
| 29 | 996 106 297 01 | overflow hose<br>for<br>model year<br>97<br>use also: | | 1 | |
| -- | 996 107 273 04 | filler tube | | 1 | |
| -- | 996 106 287 01 | overflow hose | | 1 | |
| -- | 996 106 207 03 | hose | | 1 | |
| 30 A | 996 106 207 00 | hose | -97 | 1 | |
| 30 U | 996 106 207 01 | hose | 98- | 1 | |
| (30) | 996 106 207 03 | hose<br>for<br>model year<br>97<br>use also: | 97- | 1 | |
| -- | 996 107 273 04 | filler tube | | 1 | |
| -- | 996 106 287 01 | overflow hose | | 1 | |
| -- | 996 106 297 01 | overflow hose | | 1 | |
| 31 | 999 500 084 02 | special nut<br>M 6 | | 2 | |
| 32 | 999 507 570 40 | hose holder<br>11,0/18,0 | | 2 | |
| 33 | 996 106 253 00 | hose connection | | 1 | |
| 34 | 996 641 503 00 | switch | | 1 | |
| - | 999 652 912 40 | plug socket | | 1 | |
| - | 999 650 490 40 | plug socket | | 1 | |
| - | 999 652 934 22 | contact bush | | 2 | |

| Model | Year | MG | SG | Illustration | Restrictions | UPD | 18:08 | 30.07.2008 | PET |
|---|---|---|---|---|---|---|---|---|---|
| 986 | 2004 | 1 | 06 | 106-00 | | 229 | | | |

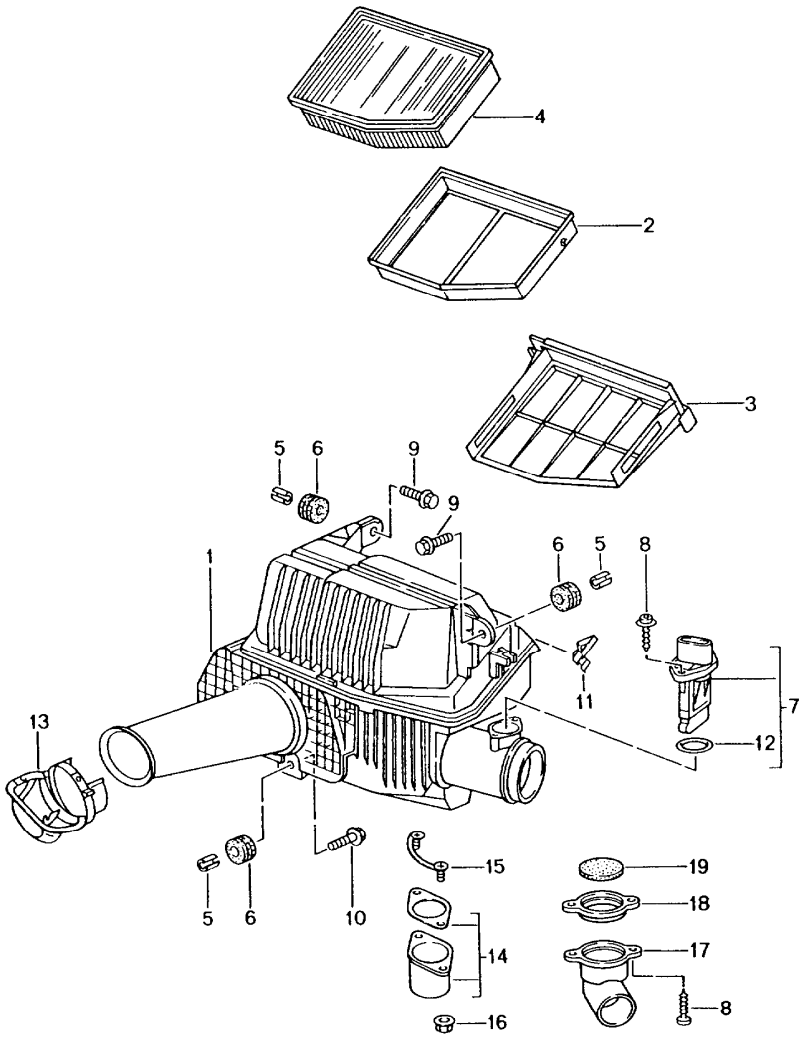


| Pos | Part Number | Description | Remark | Qty | Model |
|---|---|---|---|---|---|
| | | air cleaner | | | |
| 1 | A 996 110 121 05 | air cleaner | -97 | 1 | |
| 1 | 996 110 121 06 | air cleaner<br>for<br>M 96.20/22<br>order also:<br>996 110 297 00<br>996 110 295 00<br>999 919 198 09<br>for<br>M 96.21<br>order also:<br>996 110 297 01<br>996 110 295 00<br>999 919 198 09 | 98-<br><br><br><br><br><br><br><br><br><br><br><br><br> | 1<br><br><br><br>1<br>1<br>2<br><br><br><br>1<br>1<br>2 | |
| (1) | 987 110 021 00 | air cleaner | | 1 | M 091 |
| 2 | 996 110 133 01 | frame | | 1 | |
| 3 | 996 110 123 02 | frame | | 1 | |
| 4 | 996 110 131 03 | air cleaner cartridge | | 1 | |
| (4) | U 987 110 132 00 | air cleaner cartridge | | 1 | M 091 |
| (4) | 987 110 133 00 | air cleaner cartridge | | 1 | M 091 |
| 5 | 900 095 099 02 | roll pin<br>12 X 14 | | 3 | |
| 6 | 999 702 246 40 | grommet<br>12,0 X 17,0 X 3 | | 3 | |
| 7 | 996 606 123 00 | mass air flow meter | -99 | 1 | |
| - | 999 650 169 40 | plug socket | | 1 | |
| - | 999 652 886 22 | connector | | 5 | |
| - | 999 704 161 40 | gasket | | 5 | |
| (7) | 996 606 124 00 | mass air flow meter<br>F >>98YS6 02145<br>F >>98YS6 42000<br>see technical information<br>group 2<br>NR. 1/00 | 00- | 1 | M 620 |
| (7) | 986 606 125 00 | mass air flow meter<br>F 98YS6 02146>><br>F 98YS6 42001>><br>see technical information<br>group 2<br>NR. 1/00 | | 1 | M 620 |

| Pos | Part Number | Description | Remark | Qty | Model |
|---|---|---|---|---|---|
| (7) | 987 606 125 00 | mass air flow meter | 04 | 1 | M 091 |
| 8 | 999 919 160 07 | oval-head screw<br>5,0 X 20 | | 4 | |
| 9 | 900 075 333 02 | hexagon-head bolt<br>M 6 X 25 | | 2 | |
| 10 | 900 075 482 09 | combination screw<br>M 6 X 30 | | 1 | |
| 11 | 000 043 300 60 | spring clamp | | 2 | |
| 12 | 986 606 925 00 | o-ring | | 1 | |
| 13 | 996 110 903 00 | cup | | 1 | |
| 14 | 996 110 905 00 | water drip pan | -97 | 1 | |
| 14 | 996 110 905 01 | water drip pan | 98- | 1 | |
| 15 | 996 110 907 00 | support | | 1 | |
| 16 | 900 377 001 02 | hexagon nut<br>M 6 | | 2 | |
| 17 | 996 110 297 01 | lid | | 1 | M96.21 |
| 18 | 996 110 297 00 | water drain tube | | 1 | M96.20/22 |
| 19 | 996 110 295 00 | washer | | 1 | |

| Pos | Part Number | Description | Remark | Qty | Model |
|---|---|---|---|---|---|

| Model | Year | MG | SG | Illustration | Restrictions | UPD | 18:08 | 30.07.2008 | PET |
|---|---|---|---|---|---|---|---|---|---|
| 986 | 2004 | 1 | 07 | 107-00 | | 229 | | | |

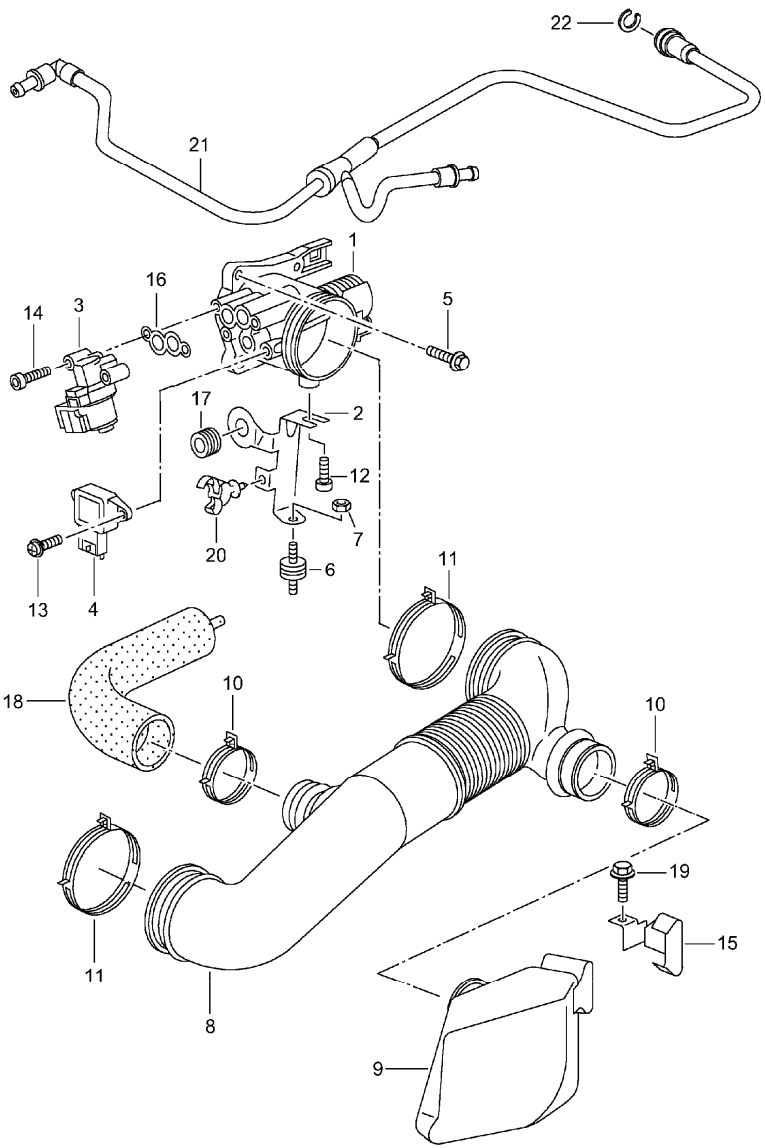


| Pos | Part Number | Description | Remark | Qty | Model |
|---|---|---|---|---|---|
| | | throttle body | | | |
| 1 | 996 110 025 08 | throttle body | | 1 | M 96.20 |
| 1 | 986 605 115 01 | throttle body | | 1 | M 96.21/22<br>M 96.23/24 |
| 2 | 996 110 223 01 | bracket | -97 | 1 | |
| 2 | 996 110 223 03 | bracket | 98- | 1 | |
| 3 | 996 606 160 01 | idle-speed adjuster | | 1 | |
| - | 999 650 089 40 | plug socket | | 1 | |
| - | 999 652 771 12 | connector | | 3 | |
| - | 999 704 161 40 | gasket | | 3 | |
| 4 | 996 606 116 00 | throttle-valve switch | | 1 | |
| - | 999 652 916 40 | plug socket | | 1 | |
| - | 999 652 886 22 | connector | | 3 | |
| - | 999 704 161 40 | gasket | | 3 | |
| 5 | 900 378 013 09 | hexagon-head bolt<br>AM 6 X 25 | | 4 | |
| 6 | 930 110 579 01 | bonded rubber buffer<br>20 X 15/M 6 | | 1 | |
| 7 | 900 377 010 09 | hexagon nut<br>M 6 | | 1 | |
| 8 | 996 110 221 07 | air box | -99 | 1 | M 249<br>M 073/481 |
| 8 | 996 110 221 08 | air box | -99 | 1 | M 481 |
| (8) | 996 110 027 03 | air box<br>with<br>muffler | 00 | 1 | M 249 |
| (8) | 996 110 027 05 | air box<br>with<br>muffler | 01- | 1 | M 249 |
| (8) | 996 110 027 04 | air box<br>with<br>muffler | 00- | 1 | M 480/481 |
| 9 | 996 110 222 00 | muffler | -99 | 1 | |
| 10 | 999 512 669 09 | hose clamp<br>40 - 60 MM | | 2 | |

| Pos | Part Number | Description | Remark | Qty | Model |
|---|---|---|---|---|---|
| 10 | 999 512 348 02 | hose clamp<br>53 X 12 | | 2 | |
| 11 | 999 512 628 02 | hose clamp<br>86 X 12 | -99 | 2 | |
| 11 | 999 512 628 02 | hose clamp<br>86 X 12<br>air box<br>throttle body | 00- | 1 | |
| (11) | N 024 522 3 | clip<br>60 X 80<br>air box<br>air cleaner | 00- | 1 | |
| 12 | - | pan-head screw | | 1 | |
| 13 | 900 146 150 02 | round head screw<br>M 4 X 16 | | 2 | |
| 14 | 900 067 013 02 | pan-head screw<br>M 6 X 35 | | 2 | |
| 15 | 996 110 212 01 | support | | 1 | |
| 16 | 996 110 310 50 | gasket | | 1 | |
| 17 | 999 702 246 40 | rubber sleeve<br>12,0 X 17,0 X 3 | | 1 | M 249 |
| 18 | 996 110 242 00 | pipe | | 1 | M 249<br>M 073/481 |
| 19 | 900 378 163 09 | hexagon-head bolt<br>M 6 X 16 | | 1 | |
| 20 | 999 507 544 40 | cable holder<br>4,0 - 12,0 | | 1 | |
| 21 | 996 110 170 00 | venturi tube | 01- | 1 | M 249 |
| 22 | 999 230 535 40 | lock | | 3 | M 249 |

| Model | Year | MG | SG | Illustration | Restrictions | UPD | 18:08 | 30.07.2008 | PET |
|---|---|---|---|---|---|---|---|---|---|
| 986 | 2004 | 1 | 07 | 107-05 | | 229 | | | |

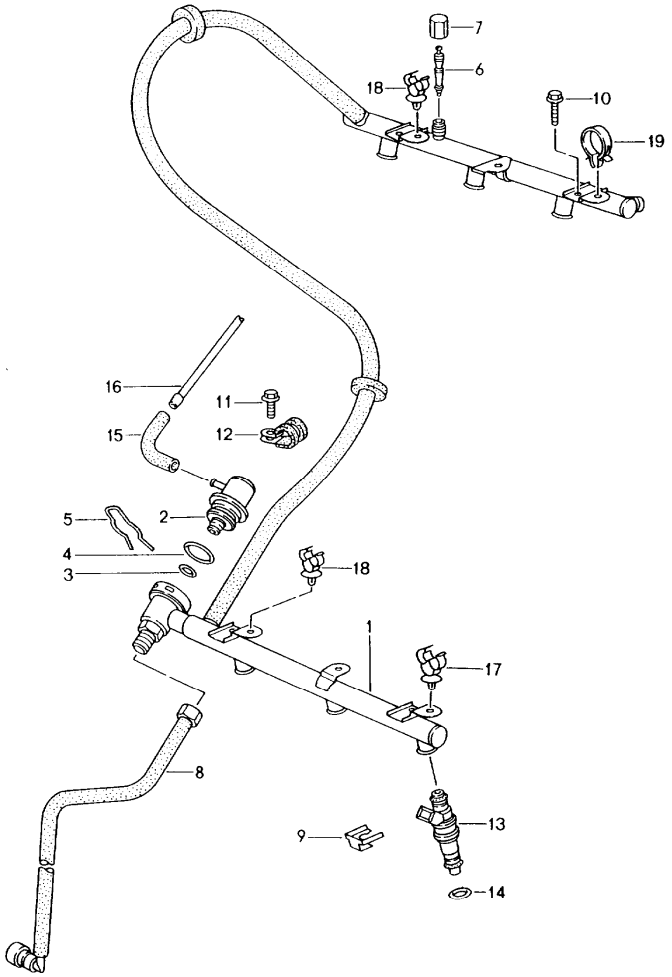


| Pos | Part Number | Description | Remark | Qty | Model |
|---|---|---|---|---|---|
| | | fuel collection pipe | | | |
| 1 | A 996 110 031 04 | fuel collection pipe | | 1 | M 96.20 |
| 1 | 996 110 031 05 | fuel collection pipe | -97 | 1 | M 96.20 |
| 1 | 996 110 031 07 | fuel collection pipe | 98- | 1 | M 96.20 |
| 1 | U 996 110 035 01 | fuel collection pipe | | 1 | M 96.21 |
| 1 | 996 110 035 03 | fuel collection pipe | 00 | 1 | M 96.21/22 |
| (1) | 996 110 035 04 | fuel collection pipe | 01 | 1 | M 96.21/22 |
| (1) | 996 110 036 02 | fuel collection pipe | 02- | 1 | M 96.21/22<br>M 96.23/24 |
| (1) | 996 110 036 30 | fuel collection pipe | M 091-04 | 1 | M 96.24 |
| 2 | 993 110 199 01 | pressure regulator | -01 | 1 | |
| 3 | 999 707 276 40 | o-ring<br>5 X 2,5 | | 1 | |
| 4 | 999 707 277 40 | o-ring<br>20 X 2,5 | | 1 | |
| 5 | 993 110 196 00 | retaining clip | | 1 | |
| 6 | 993 110 217 00 | valve | | 1 | |
| 7 | 993 110 218 01 | cap | | 1 | |
| 8 | 996 110 316 07 | fuel hose | -97 | 1 | |
| 8 | 996 110 316 08 | feed line | -99 | 1 | M 96.20 |
| (8) | 996 110 316 10 | feed line | 00-01 | 1 | M 96.21/22 |
| 9 | 996 110 113 52 | retaining clip | | 6 | |
| 10 | 900 378 036 09 | hexagon-head bolt<br>M 6 X 12 | | 4 | |
| 11 | 999 919 085 02 | hexagon-head bolt<br>6 X 22 | | 1 | |
| 12 | 999 511 234 02 | clamp<br>16 X 15 | | 1 | |
| 13 | A 996 606 120 00 | injector valve | -99 | 6 | |
| (13) | 996 606 120 01 | injector valve | 00 | 6 | |
| (13) | 996 606 122 00 | injector valve | 01- | 6 | |
| - | 999 652 840 40 | plug socket | | 6 | |

| Pos | Part Number | Description | Remark | Qty | Model |
|---|---|---|---|---|---|
| - | 999 652 771 12 | connector | | 12 | |
| - | 999 704 161 40 | gasket | | 12 | |
| 14 | 944 110 901 01 | o-ring<br>7,52 X 3,53 | | 12 | |
| 15 | 928 574 717 03 | protective tube | | 1 | |
| - | 000 043 205 01 | pipe<br>4 X 1 | | * | |
| 16 | - | 340 MM | | 1 | |
| 17 | 999 511 240 40 | cable holder<br>11,0 - 18 | | 2 | |
| 18 | 999 511 239 40 | cable holder<br>6,0 - 12 | | 2 | |
| 19 | 321 971 847 B | clip | | 2 | |

| Pos | Part Number | Description | Remark | Qty | Model |
|---|---|---|---|---|---|

| Model | Year | MG | SG | Illustration | Restrictions | UPD | 18:08 | 30.07.2008 | PET |
|---|---|---|---|---|---|---|---|---|---|
| 986 | 2004 | 1 | 07 | 107-10 | | 229 | | | |

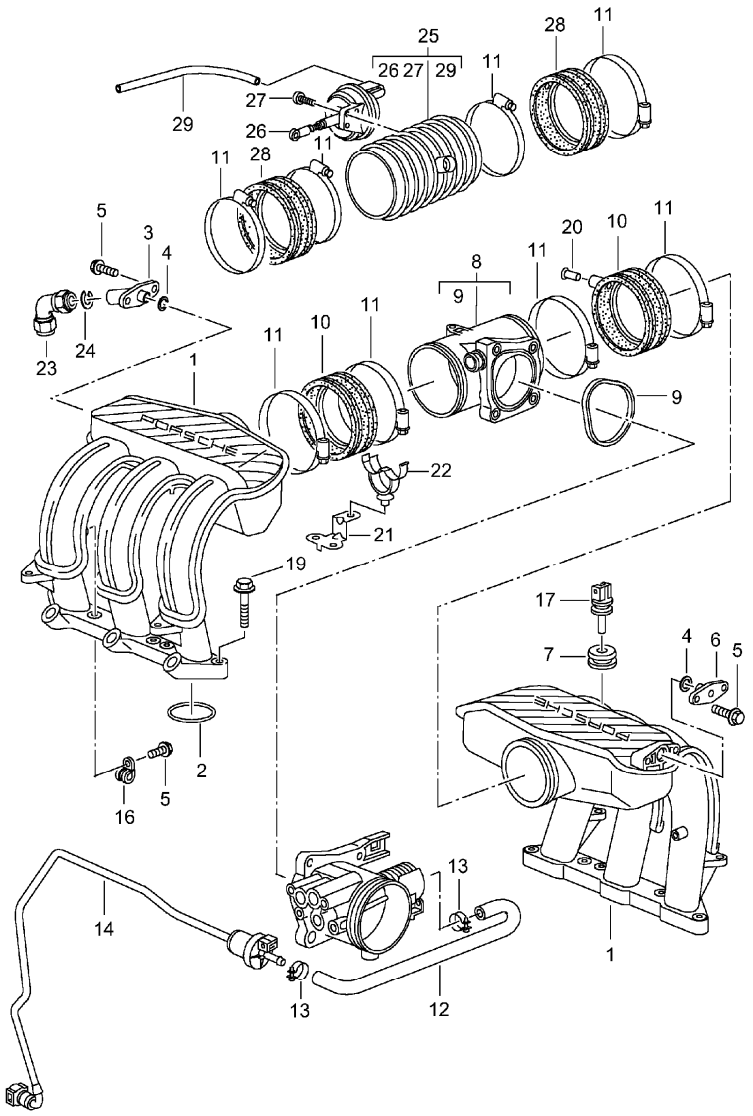


| Pos | Part Number | Description | Remark | Qty | Model |
|---|---|---|---|---|---|
| | | intake distributor | | | |
| 1 | 996 110 015 03 | intake distributor | | 2 | M96.20 |
| (1) | 996 110 045 01 | intake distributor | | 2 | M96.21/22<br>M96.23/24 |
| 2 | 996 110 247 01 | gasket | | 6 | M96.20 |
| 2 | 996 110 247 03 | gasket | | 6 | M96.21/22<br>M96.23/24 |
| 3 | 996 110 151 00 | adapter | | 1 | |
| (3) | 996 110 151 51 | adapter | 01- | 1 | M 249 |
| 4 | 999 701 163 40 | o-ring<br>11 X 2,5 | | 2 | |
| 5 | 999 919 125 09 | hexagon-head bolt<br>6,0 X 16 | | 5 | |
| 6 | 996 110 251 51 | lid | | 1 | |
| 7 | 993 110 530 00 | grommet | | 1 | |
| 8 | 996 110 215 53 | intermediate piece | | 1 | M 96.20 |
| (8) | 996 110 055 00 | intermediate piece | | 1 | M 96.21/22<br>M 96.23/24 |
| 9 | 996 110 317 50 | sealing ring | | 1 | |
| (9) | 996 110 318 01 | sealing ring | | 1 | M 96.21/22<br>M 96.23/24 |
| 10 | A 996 110 685 51 | rubber sleeve | -97 | 2 | |
| 10 | 996 110 685 52 | rubber sleeve | 98- | 2 | |
| (10) | 996 110 685 01 | rubber sleeve | | 2 | M 96.21/22<br>M 96.23/24 |
| 11 | 999 512 539 00 | hose clamp<br>90 - 110/9 | | 4 | M 96.20 |
| 11 | 999 512 539 01 | hose clamp<br>90 - 110/9 | | 4 | M 96.20 |
| (11) | 999 512 350 02 | hose clamp<br>80 - 100/9 | | 8 | M 96.21/22<br>M 96.23/24 |
| 12 | 996 110 127 01 | vent line | -99 | 1 | M 96.20 |
| (12) | 996 110 137 01 | vent line | 00-02<br>03- | 1 | M 96.21/22<br>M 96.23/24 |

| Pos | Part Number | Description | Remark | Qty | Model |
|---|---|---|---|---|---|
| 13 | 999 512 427 02 | hose clamp<br>8 - 16/9 | | 3 | |
| 14 | 996 110 129 04 | vent line | | 1 | |
| - | 999 652 839 40 | plug socket | | 1 | |
| - | 999 652 771 12 | connector | | 2 | |
| - | 999 704 161 40 | gasket | | 2 | |
| 16 | 999 511 116 02 | clamp<br>10 X 15 | | 1 | |
| 17 | 996 606 113 00 | temperature sensor | -02 | 1 | |
| 17 | 996 606 113 01 | temperature sensor | 03- | 1 | |
| - | 999 650 167 40 | plug socket | | 1 | |
| - | 999 652 771 12 | connector | | 2 | |
| - | 999 704 161 40 | gasket | | 2 | |
| 19 | 900 378 172 09 | hexagon-head bolt<br>AM 6 X 35 | | 12 | |
| 20 | 900 312 012 02 | locking bolt | | 1 | |
| 21 | 986 607 103 00 | support | -97 | 1 | |
| 21 | 986 607 103 01 | support | 98- | 1 | |
| 22 | 999 511 244 40 | cable holder | | 1 | |
| 23 | 999 230 498 40 | angled pipe | | 1 | |
| 24 | 999 230 535 40 | lock | | 1 | |
| 25 | A 996 110 130 01 | resonance tube | | 1 | M 96.21/22<br>M 96.23/24 |
| (25) | 996 110 130 02 | resonance tube | | 1 | M 96.21/22<br>M 96.23/24 |
| 26 | 993 110 462 02 | vacuum unit | | 1 | M 96.21/22<br>M 96.23/24 |
| 27 | 900 146 123 02 | screw<br>M 5 X 16 | | 2 | |
| 28 | 996 110 686 01 | rubber sleeve | | 2 | M 96.21/22<br>M 96.23/24 |
| - | 000 043 204 99 | hose<br>3,5 X 2 | | * | |

| Pos | Part Number | Description | Remark | Qty | Model |
|---|---|---|---|---|---|
| 29 | - | 120 MM | | 1 | |

| Model | Year | MG | SG | Illustration | Restrictions | UPD | 18:08 | 30.07.2008 | PET |
|---|---|---|---|---|---|---|---|---|---|
| 986 | 2004 | 1 | 08 | 108-05 | | 229 | | | |

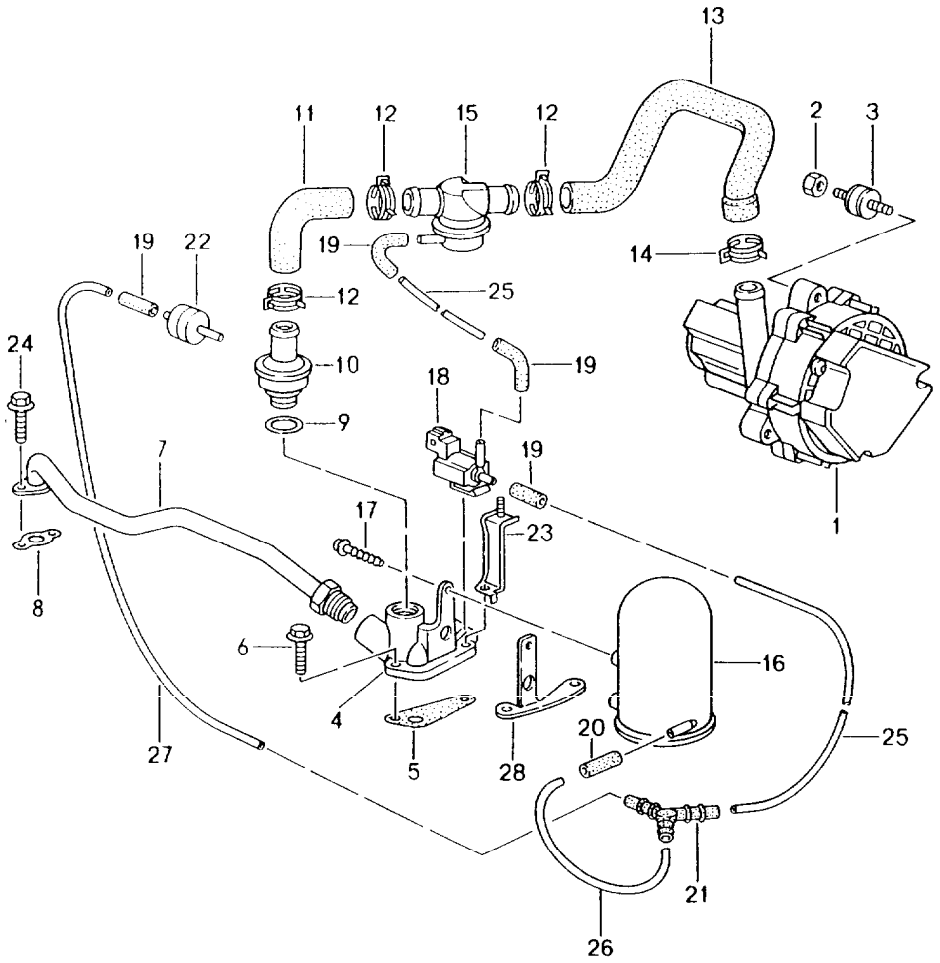


| Pos | Part Number | Description | Remark | Qty | Model |
|---|---|---|---|---|---|
| | | air injection | -99 | | M96.20 |
| 1 | A 986 624 103 00 | air pump | -97 | 1 | |
| 1 | A 986 624 103 01 | air pump | -98 | 1 | |
| 1 | 986 624 104 00 | air pump | -99 | 1 | |
| - | 999 652 971 40 | plug socket | | 1 | |
| - | 999 652 776 22 | connector | | 2 | |
| - | 999 652 778 40 | gasket | | 2 | |
| 2 | 900 377 010 09 | hexagon nut<br>M 6 | | 3 | |
| 3 | 999 703 465 00 | bonded rubber buffer<br>20 X 20 / m6 | 99 | 3 | |
| 4 | 996 113 131 52 | distributor housing | | 1 | |
| 5 | 996 113 233 50 | gasket | | 1 | |
| 6 | 900 378 030 09 | hexagon-head bolt<br>M 6 X 20 | | 2 | |
| 7 | 996 113 117 55 | air tube | | 1 | |
| 8 | 996 113 213 51 | gasket | | 1 | |
| 9 | 900 123 011 30 | sealing ring<br>A 22 X 27 | | 1 | |
| 10 | 993 113 250 03 | check valve | 99 | 1 | |
| 11 | 996 113 241 53 | hose | | 1 | |
| 12 | 999 512 603 09 | hose clamp<br>26 X 12 | -98 | 3 | |
| 12 | 999 512 657 09 | hose clamp<br>26 X 12 | 99 | 3 | |
| 13 | 996 113 239 03 | hose<br>F >>98WU6 20657<br>F >>98WS6 20860 | | 1 | |
| 13 | 996 113 239 04 | hose<br>F 98WU6 20658>><br>F 98WS6 20861>> | | 1 | |
| 14 | 999 512 605 09 | hose clamp<br>28 X 12 | -98 | 1 | |
| 14 | 999 512 659 09 | hose clamp<br>28 X 12 | 99 | 1 | |

| Pos | Part Number | Description | Remark | Qty | Model |
|---|---|---|---|---|---|
| 14 | 999 512 552 00 | hose clamp<br>28 X 12 | | 1 | |
| 15 | 993 113 245 00 | change-over valve | 99 | 1 | |
| 16 | 993 110 140 02 | vacuum reservoir | -97 | 1 | |
| 16 | 993 110 140 03 | vacuum tank | 98- | 1 | |
| 17 | 999 919 115 02 | oval-head screw<br>5 X 22 | | 1 | |
| 18 | 993 605 123 00 | valve | -98 | 1 | |
| 18 | 996 605 123 01 | change-over valve | 99 | 1 | |
| - | 999 652 838 40 | plug socket | | 1 | |
| - | 999 652 771 12 | connector | | 2 | |
| - | 999 704 161 40 | gasket | | 2 | |
| 19 | 928 574 717 03 | moulded hose | | 4 | |
| 20 | 999 239 040 40 | connecting piece | | 1 | |
| 21 | 928 573 727 03 | y-piece | | 1 | |
| 22 | 964 110 950 01 | check valve | | 1 | |
| 23 | 986 607 102 01 | support | | 1 | |
| 24 | 900 378 035 01 | hexagon-head bolt<br>M 6 X 16 | | 2 | |
| - | 000 043 205 01 | pipe<br>4 X 1,0 | | * | |
| 25 | - | 120 MM | | 2 | |
| 26 | - | 40 MM | | 1 | |
| 27 | - | 240 MM | | 1 | |
| 28 | 996 113 145 50 | support | | 1 | |
| -- | 996 113 901 00 | stopper<br>for cars without<br>m 661 | | 1 | |

| Pos | Part Number | Description | Remark | Qty | Model |
|---|---|---|---|---|---|

| Model | Year | MG | SG | Illustration | Restrictions | UPD | 18:09 | 30.07.2008 | PET |
|---|---|---|---|---|---|---|---|---|---|
| 986 | 2004 | 1 | 08 | 108-06 | | 229 | | | |

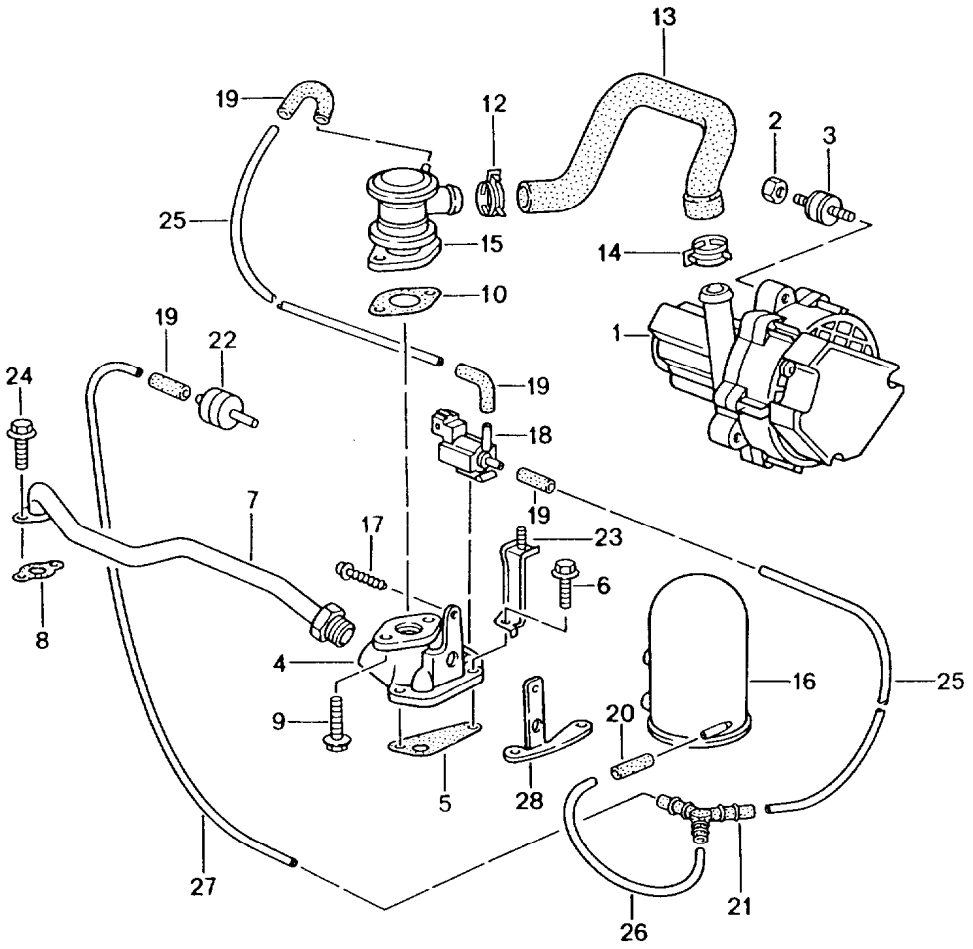


| Pos | Part Number | Description | Remark | Qty | Model |
|---|---|---|---|---|---|
| | | air injection | 00-02<br>03- | | M96.21/22<br>M96.23/24 |
| 1 | 996 605 104 00 | air pump | | 1 | |
| - | 999 652 971 40 | plug socket | | 1 | |
| - | 999 652 776 22 | connector | | 2 | |
| - | 999 652 778 40 | gasket | | 2 | |
| 2 | 900 377 010 09 | hexagon nut<br>M 6 | | 3 | |
| 3 | 999 703 477 40 | bonded rubber buffer<br>20 X 20 / m6 | | 3 | |
| 4 | 996 113 131 01 | distributor housing | | 1 | |
| 5 | 996 113 233 50 | gasket | | 1 | |
| 6 | 900 378 030 09 | hexagon-head bolt<br>M 6 X 20 | | 2 | |
| 7 | 996 113 117 55 | air tube | | 1 | |
| 8 | 996 113 213 51 | gasket | | 1 | |
| 9 | 900 378 035 01 | hexagon-head bolt<br>M 6 X 16 | | 2 | |
| 10 | 993 113 258 51 | gasket | | 1 | |
| 12 | 999 512 657 09 | hose clamp<br>26 X 12 | | 1 | |
| 13 | 996 113 239 06 | hose | | 1 | M 660/661 |
| 13 | 996 113 239 05 | hose | | 1 | M 661 |
| (13) | 996 113 164 00 | air hose | | 1 | M 661 |
| 14 | 999 512 659 09 | hose clamp<br>28 X 12 | | 1 | |
| 14 | 999 512 552 00 | hose clamp<br>28 X 12 | | 1 | |
| 15 | 996 113 249 01 | shut-off valve | | 1 | |
| 16 | 993 110 140 03 | vacuum tank | | 1 | |
| 17 | 999 919 115 02 | oval-head screw<br>5 X 22 | | 1 | |
| 18 | 996 605 123 01 | change-over valve | | 1 | |

| Pos | Part Number | Description | Remark | Qty | Model |
|---|---|---|---|---|---|
| - | 999 652 838 40 | plug socket | | 1 | |
| - | 999 652 771 12 | connector | | 2 | |
| - | 999 704 161 40 | gasket | | 2 | |
| 19 | 928 574 717 03 | moulded hose | | 4 | |
| 20 | 999 239 040 40 | connecting piece | | 1 | |
| 21 | 928 573 727 03 | y-piece | | 1 | |
| 22 | 964 110 950 01 | check valve | | 1 | |
| 23 | 986 607 102 01 | support | | 1 | |
| 24 | 900 378 035 01 | hexagon-head bolt<br>M 6 X 16 | | 2 | |
| - | 000 043 205 01 | pipe<br>4 X 1,0 | | * | |
| 25 | - | 120 MM | | 2 | |
| 26 | - | 40 MM | | 1 | |
| 27 | - | 240 MM | | 1 | |
| 28 | 996 113 145 50 | support | | 1 | |
| -- | U 911 101 185 00 | stopper<br>for cars without<br>M 661 | | 1 | |
| -- | 996 113 901 00 | stopper<br>for cars without<br>m 661 | | 1 | |
| -- | 996 113 160 01 | damper | | 1 | M 661 |
| -- | 999 507 726 40 | cable strap | | 1 | |

| Model | Year | MG | SG | Illustration | Restrictions | UPD | 18:09 | 30.07.2008 | PET |
|---|---|---|---|---|---|---|---|---|---|
| 986 | 2004 | 1 | 09 | 109-00 | | 229 | | | |

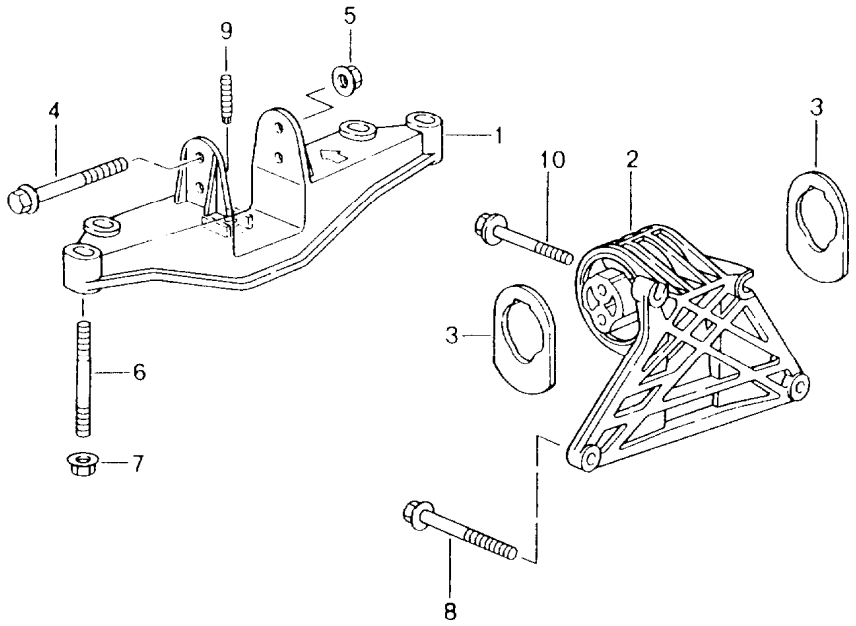


| Pos | Part Number | Description | Remark | Qty | Model |
|---|---|---|---|---|---|
| | | engine suspension | | | |
| 1 | 986 375 309 01 | engine carrier | | 1 | |
| 2 | 986 375 023 05 | engine bracket | -98 | 1 | |
| 2 | 986 375 023 07 | engine bracket | 99- | 1 | |
| 3 | 986 375 255 01 | stop | | 2 | |
| 4 | 900 378 167 09 | hexagon-head bolt<br>M 10 X 110 | | 2 | |
| 5 | 900 380 008 09 | hexagon nut<br>M 10 | | 2 | |
| 6 | 999 061 101 09 | stud<br>M 10 X 68 | -97 | 4 | |
| 6 | 999 061 106 09 | stud<br>M 10 X 83 | 98- | 4 | |
| 7 | 999 076 053 09 | hexagon nut<br>M 10 | | 4 | |
| 8 | 999 072 027 09 | hexagon-head bolt<br>M 10 X 120 | | 3 | |
| 9 | 999 919 169 02 | stud<br>6,0 X 11/M6 | | 1 | |
| 10 | 999 072 036 09 | hexagon-head bolt<br>M 10 X 80 | | 1 | |

| Model | Year | MG | SG | Illustration | Restrictions | UPD | 18:09 | 30.07.2008 |
|---|---|---|---|---|---|---|---|---|
| 986 | 2004 | 1 | 98 | 198-00R | | 229 | | |

| Pos | Part Number | Description | Remark | Qty | Model |
|---|---|---|---|---|---|
| | | gasket set<br>repair kits | | | |
| >> | >>986 100 905 00 | gasket set<br>engine | | 1 | |
| | | use also:<br>996 104 169 00<br>996 104 170 04<br>996 110 247 01 | | <br>1<br>1<br>6 | |
| - | 996 101 361 51 | gasket | | 1 | |
| - | 996 101 363 50 | gasket | | 1 | |
| - | 999 701 789 40 | o-ring<br>12 X 2 | | 4 | |
| - | 996 101 331 50 | gasket | | 1 | |
| - | 996 101 336 50 | gasket | | 1 | |
| - | 900 123 147 30 | sealing ring<br>A 27 X 32 | | 4 | |
| - | 900 123 106 30 | sealing ring<br>A 18 X 24 | | 1 | |
| - | 996 113 233 50 | gasket | | 1 | |
| - | 996 113 213 51 | gasket | | 1 | |
| - | 999 113 475 40 | shaft sealing ring<br>40 X 62 X10 | | 1 | |
| - | 999 113 490 40 | shaft sealing ring<br>85 X 105 X 11 | | 1 | |
| - | 999 218 005 02 | pan-head screw<br>M 6 X 16 | | 6 | |
| - | 900 123 007 30 | sealing ring<br>A 14 X 18 | | 1 | |
| - | 996 105 223 52 | lid | | 2 | |
| - | 000 043 203 64 | sleeve | | 1 | |
| - | 000 043 204 46 | sleeve | | 1 | |
| - | 999 707 343 40 | o-ring<br>25,07 X 2,62 | | 6 | |
| - | 999 707 215 40 | o-ring<br>27,94 X 5,33 | | 6 | |
| - | 996 104 215 54 | lid | | 6 | |
| - | U 996 105 017 01 | housing<br>52 X 2,5 | | 1 | |

| Model | Year | MG | SG | Illustration | Restrictions | UPD | 18:09 | 30.07.2008 |
|---|---|---|---|---|---|---|---|---|
| 986 | 2004 | 1 | 98 | 198-00R | | 229 | | |

| Pos | Part Number | Description | Remark | Qty | Model |
|---|---|---|---|---|---|
| - | 999 707 346 40 | o-ring<br>15 X 3 | | 6 | |
| - | 999 707 344 40 | o-ring<br>18,77 X 1,78 | | 2 | |
| - | 996 107 103 51 | o-ring | | 2 | |
| - | 996 107 261 50 | sealing ring | | 1 | |
| - | 996 106 316 51 | gasket | | 1 | |
| - | 996 106 321 50 | gasket | | 1 | |
| - | 900 123 144 30 | sealing ring<br>A 10 X 13,5 | | 1 | |
| - | 996 107 337 50 | gasket | | 1 | |
| - | 996 107 221 51 | o-ring<br>95 X 2,5 | | 2 | |
| - | U 999 217 150 09 | hexagon-head bolt<br>M 6 X 20 | | 18 | |
| - | 999 217 150 09 | hexagon-head bolt<br>M 6 X 20 | | 18 | |
| - | 999 707 409 40 | o-ring<br>26 X 3 | | 2 | |
| - | 999 707 389 40 | o-ring<br>35 X 4 | | 2 | |
| - | 996 107 313 51 | sealing ring | | 1 | |
| - | 999 707 375 40 | o-ring<br>30 X 3 | | 1 | |
| - | 900 378 030 09 | hexagon-head bolt<br>M 6 X 20 | | 2 | |
| - | 999 707 369 40 | o-ring<br>9,5 X 3,5 | | 1 | |
| - | 999 707 348 40 | o-ring<br>42 X 4 | | 2 | |
| - | 996 107 122 00 | sealing ring<br>14 X 1,78 | | 1 | |
| - | 999 707 154 40 | o-ring<br>18,77 X 1,78 | | 1 | |
| - | 996 106 340 51 | gasket | | 1 | |
| - | 996 106 326 50 | gasket | | 1 | |
| - | 996 110 247 01 | gasket | | 6 | |

| Model | Year | MG | SG | Illustration | Restrictions | UPD | 18:09 | 30.07.2008 |
|---|---|---|---|---|---|---|---|---|
| 986 | 2004 | 1 | 98 | 198-00R | | 229 | | |

| Pos | Part Number | Description | Remark | Qty | Model |
|---|---|---|---|---|---|
| - | 900 378 172 09 | hexagon-head bolt<br>AM 6 X 35 | | 12 | |
| - | 900 123 011 30 | sealing ring<br>A 22 X 27 | | 1 | |
| - | 996 111 107 54 | gasket | | 2 | |
| - | 900 378 131 00 | hexagon-head bolt<br>M 8 X 28 | | 12 | |
| - | 900 378 163 09 | hexagon-head bolt<br>M 6 X 16 | | 3 | |

| Model | Year | MG | SG | Illustration | Restrictions | UPD | 18:09 | 30.07.2008 | PET |
|---|---|---|---|---|---|---|---|---|---|
| 986 | 2004 | 2 | 01 | 201-00 | | 229 | | | |

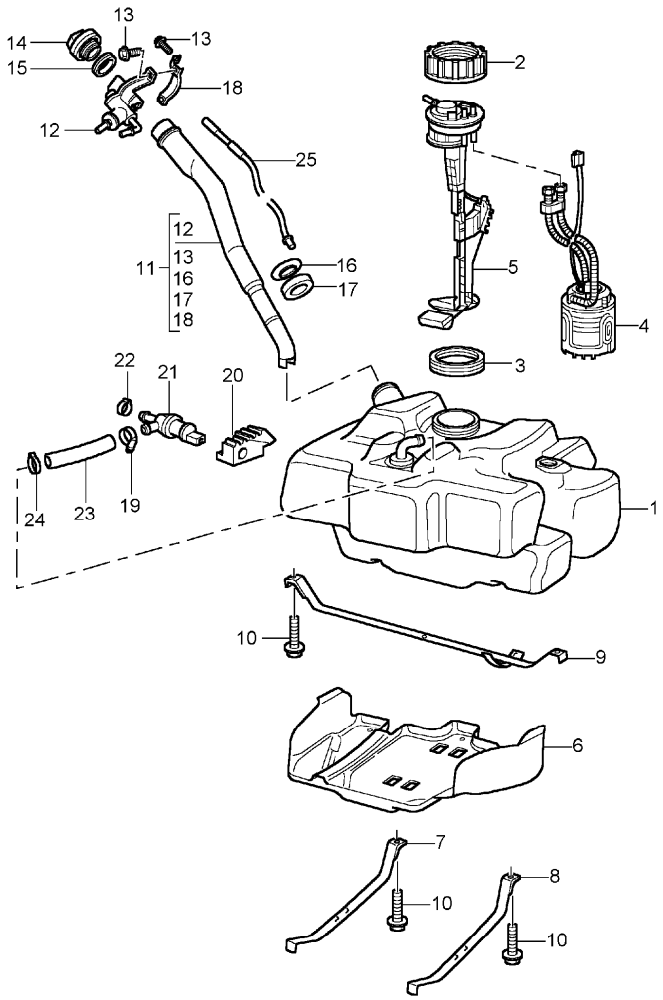


| Pos | Part Number | Description | Remark | Qty | Model |
|---|---|---|---|---|---|
| | | fuel tank | | | |
| 1 | 996 201 021 02 | fuel tank | /LL -01 | 1 | |
| 1 | 996 201 021 05 | fuel tank | /LL 02- | 1 | |
| (1) | 996 201 022 02 | fuel tank | /RL -01 | 1 | |
| (1) | 996 201 022 03 | fuel tank | /RL 02- | 1 | |
| 2 | 996 201 623 00 | union nut | | 1 | |
| 3 | 321 919 133 | sealing ring | -97 | 1 | |
| 3 | 321 919 133 | sealing ring | 98- | 1 | |
| 4 | 996 620 102 00 | fuel pump | -01 | 1 | |
| 4 | 996 620 132 00 | fuel pump | 02- | 1 | |
| 5 | 996 620 808 00 | tank gauge | -99 | 1 | |
| (5) | 996 620 808 00 | tank gauge | -01 | 1 | |
| (5) | 996 620 832 01 | tank gauge | 02- | 1 | |
| 6 | 996 201 331 00 | protective plate | /LL | 1 | |
| (6) | 996 201 331 02 | protective plate | /RL | 1 | |
| 7 | 996 201 105 02 | restraining strap | | 1 | |
| 8 | 996 201 106 02 | restraining strap | | 1 | |
| 9 | 996 201 107 02 | restraining strap | /LL | 1 | |
| 9 | 996 201 108 00 | restraining strap | /RL | 1 | |
| 10 | 900 075 479 09 | combination screw M 8 X 40 | | 4 | |
| 11 | 996 201 043 09 | filler neck | | 1 | M 009 |
| 11 | 986 201 043 04 | filler neck | | 1 | M 009/150 M 009/193 |
| 11 | 996 201 043 09 | filler neck | -00 | 1 | M 008 |
| 11 | 996 201 043 09 | filler neck | 01- | 1 | M 008 |
| 11 | 996 201 043 10 | filler neck | -00 | 1 | M 008/150 M 193 |
| 11 | 996 201 043 10 | filler neck | 01- | 1 | M 008/150 M 193 |
| 12 | 996 201 143 01 | bleeder valve | -97 | 1 | |

| Pos | Part Number | Description | Remark | Qty | Model |
|---|---|---|---|---|---|
| 12 | 996 201 143 01 | bleeder valve | 98- | 1 | |
| 13 | 900 378 036 09 | hexagon-head bolt<br>M 6 X 12 | | 3 | |
| 14 | A 996 201 241 00 | fuel tank cap | -98 | 1 | |
| 14 | 996 201 241 01 | fuel tank cap | -00 | 1 | |
| (14) | 996 201 241 02 | fuel tank cap<br>with<br>clip | 01- | 1 | |
| -- | 999 507 499 40 | expansion rivet | | 1 | |
| 15 | 191 201 557 | gasket | -98 | 1 | |
| 15 | 191 201 557 | gasket | 99- | 1 | |
| 16 | 996 201 755 00 | support washer | | 1 | |
| 17 | 996 201 753 00 | gasket | | 1 | |
| 18 | 996 201 751 00 | support | | 1 | |

| Model | Year | MG | SG | Illustration | Restrictions | UPD | 18:09 | 30.07.2008 | PET |
|---|---|---|---|---|---|---|---|---|---|
| 986 | 2004 | 2 | 01 | 201-05 | | 229 | | | |

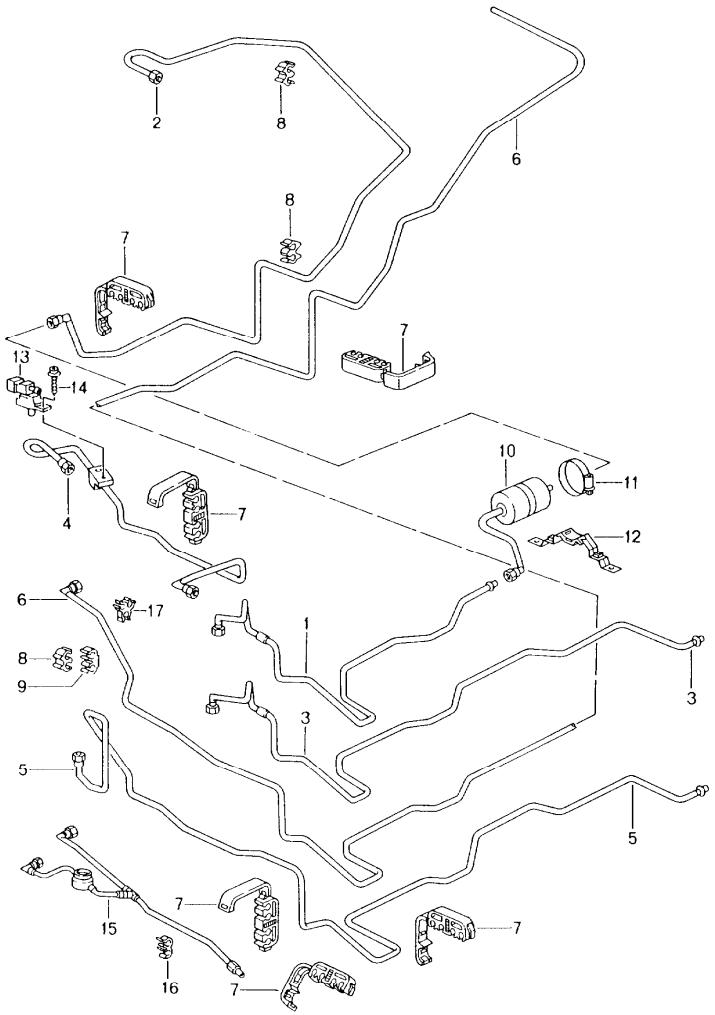


| Pos | Part Number | Description | Remark | Qty | Model |
|---|---|---|---|---|---|
| | | fuel system | | | |
| 1 | 986 201 261 01 | pressure line<br>front | -01 | 1 | |
| 1 | 986 201 261 02 | pressure line<br>front | 02- | 1 | |
| 2 | 986 201 267 00 | pressure line | | 1 | |
| 3 | 986 201 271 01 | return line | | 1 | |
| 4 | 996 201 251 01 | vent line<br>fuel pump<br>for<br>filler neck | | 1 | |
| 5 | 986 201 353 00 | vent line<br>carbon canister<br>for<br>engine | | 1 | |
| 6 | 986 201 361 00 | air tube<br>fresh-air intake system | | 1 | |
| 7 | 999 507 554 40 | cable holder | | 9 | |
| 8 | 999 507 488 40 | cable holder | | 3 | |
| 9 | 999 507 487 40 | cable holder | | 1 | |
| 10 | 996 110 253 01 | fuel filter | -01 | 1 | |
| 11 | 999 512 635 00 | hose clamp<br>76 X 12 | | 1 | |
| 12 | 996 504 517 00 | support | | 1 | |

| Model | Year | MG | SG | Illustration | Restrictions | UPD | 18:10 | 30.07.2008 |
|---|---|---|---|---|---|---|---|---|
| 986 | 2004 | 2 | 01 | 201-20 | | 229 | | |

PORSCHE PET PORSCHE

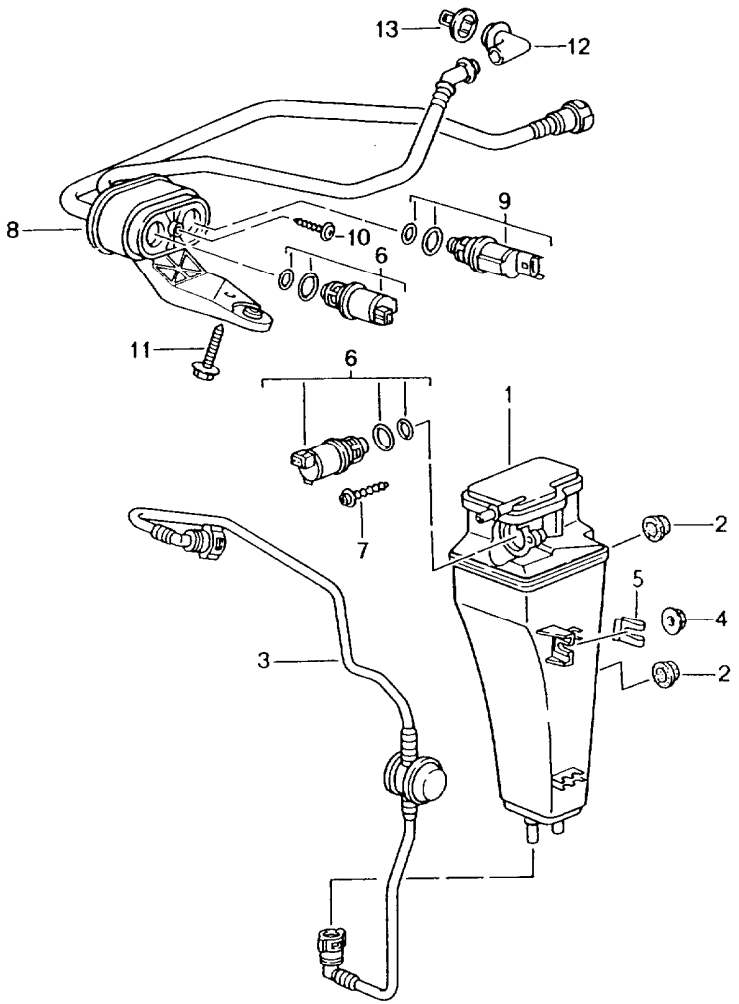


| Pos | Part Number | Description | Remark | Qty | Model |
|---|---|---|---|---|---|
| | | carbon canister | | | |
| 1 | 996 201 221 09 | carbon canister | | 1 | |
| 2 | 999 702 221 40 | grommet | | 2 | |
| 3 | 996 201 255 07 | vent line | | 1 | |
| 4 | 999 084 629 09 | hexagon nut<br>M 6 | | 1 | |
| 5 | 999 507 543 02 | clamp<br>2,00 - 3,00 | | 1 | |
| 6 | A 996 605 201 01 | shut-off valve | | 1 | M 660/664 |
| 6 | 996 605 201 01 | shut-off valve | | 1 | M 660 |

| Model | Year | MG | SG | Illustration | Restrictions | UPD | 18:10 | 30.07.2008 | PET |
|---|---|---|---|---|---|---|---|---|---|
| 986 | 2004 | 2 | 02 | 202-00 | | 229 | | | |

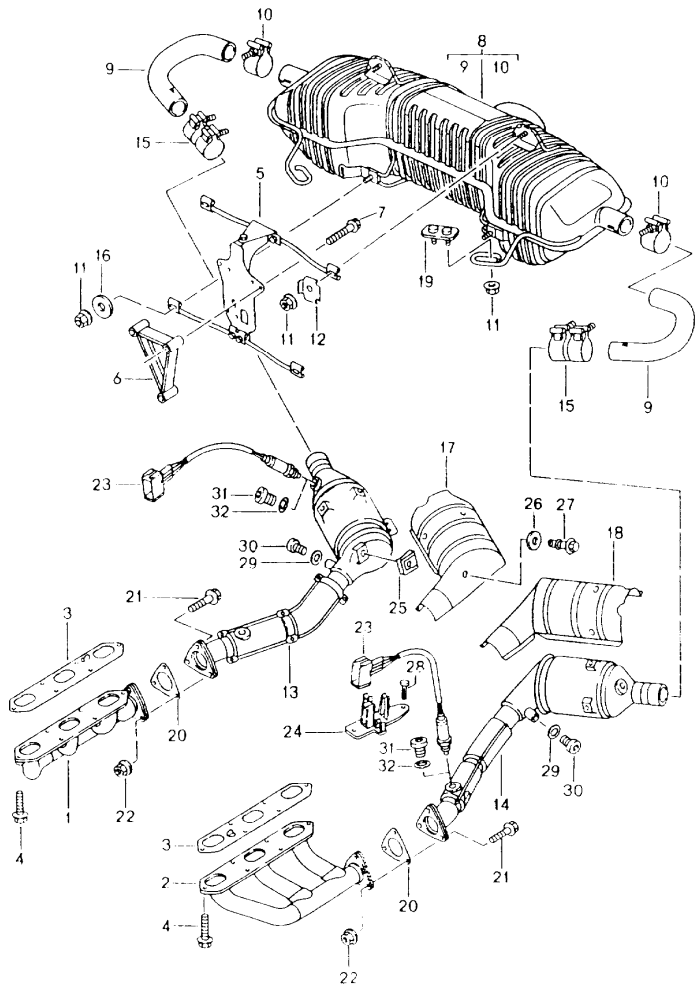


| Pos | Part Number | Description | Remark | Qty | Model |
|---|---|---|---|---|---|
| | | exhaust system<br>M 96.20 | | | |
| 1 | 996 111 101 05 | exhaust manifold | | 1 | M96.20 |
| 2 | 996 111 102 05 | exhaust manifold | | 1 | M96.20 |
| 3 | A 996 111 107 52 | gasket | | 2 | |
| (3) | 996 111 107 54 | gasket | | 2 | |
| 4 | 900 378 131 00 | hexagon-head bolt<br>M 8 X 28 | | 12 | |
| 5 | 996 111 024 01 | support | | 1 | M96.20 |
| 6 | 996 111 223 00 | adapter | | 1 | M 481 |
| 7 | 900 378 022 09 | hexagon-head bolt<br>M 8 X 25 | | 3 | M 249 |
| 7 | 900 378 175 09 | hexagon-head bolt<br>M 8 X 65 | | 3 | M 481 |
| 8 | A 996 111 121 06 | muffler | -97 | 1 | |
| 8 | 996 111 121 07 | muffler | -99 | 1 | |
| 9 | 996 111 313 01 | connecting tube | -99 | 2 | |
| 10 | 996 111 209 00 | clip | | 2 | |
| 11 | 900 380 005 09 | hexagon nut<br>M 8 | | 8 | |
| 12 | 996 111 311 01 | reinforcement plate | | 2 | |
| 13 | 996 113 921 01 | catalytic converter | -99 | 1 | |
| 14 | 996 113 922 01 | catalytic converter | -99 | 1 | |
| 15 | 996 111 110 00 | sleeve | -99 | 2 | |
| 16 | 900 035 004 02 | washer<br>R 9 | | 2 | |
| 17 | 996 113 421 00 | heat shield | | 1 | |
| 18 | 996 113 422 00 | heat shield | | 1 | |
| 19 | 996 113 311 01 | retainer plate | | 2 | |
| 20 | 996 111 113 02 | gasket | | 2 | |
| 21 | 900 074 287 02 | hexagon-head bolt<br>M 8 X 35 | | 6 | |

| Pos | Part Number | Description | Remark | Qty | Model |
|---|---|---|---|---|---|
| 22 | 999 084 052 02 | hexagon nut<br>M 8 | | 5 | |
| 23 | 986 606 126 00 | oxygen sensor | -97 | 4 | |
| 23 | 986 606 126 01 | oxygen sensor | -99 | 4 | |
| -- | 000 043 207 07 | grease<br>for oxygen sensor | | 1 | |
| - | 999 650 075 40 | pin connector socket | | 1 | |
| - | 999 652 820 12 | connector | | 4 | |
| - | 999 704 161 40 | gasket | | 4 | |
| 24 | 986 606 105 01 | support | | 2 | |
| 25 | 999 507 413 09 | retaining clip | | 6 | |
| 26 | 900 151 007 02 | washer<br>7,4 | | 6 | |
| 27 | 999 507 430 09 | locking bolt<br>6 X 12 | | 6 | |
| 28 | 999 591 712 40 | expansion rivet<br>6,0 X 12,0 | | 4 | |
| 29 | 900 123 050 20 | sealing ring<br>8 X 11,5 | | 2 | |
| 30 | 900 083 080 00 | screw plug<br>8 X 1 X 10 | | 2 | |
| 31 | 900 219 015 00 | screw plug<br>18 X 1,5 | | 4 | |
| 32 | 900 123 009 20 | sealing ring<br>18 X 24 | | 4 | |

| Pos | Part Number | Description | Remark | Qty | Model |
|---|---|---|---|---|---|

| Model | Year | MG | SG | Illustration | Restrictions | UPD | 18:10 | 30.07.2008 |
|---|---|---|---|---|---|---|---|---|
| 986 | 2004 | 2 | 02 | 202-05 | | 229 | | |

PORSCHE PET PORSCHE

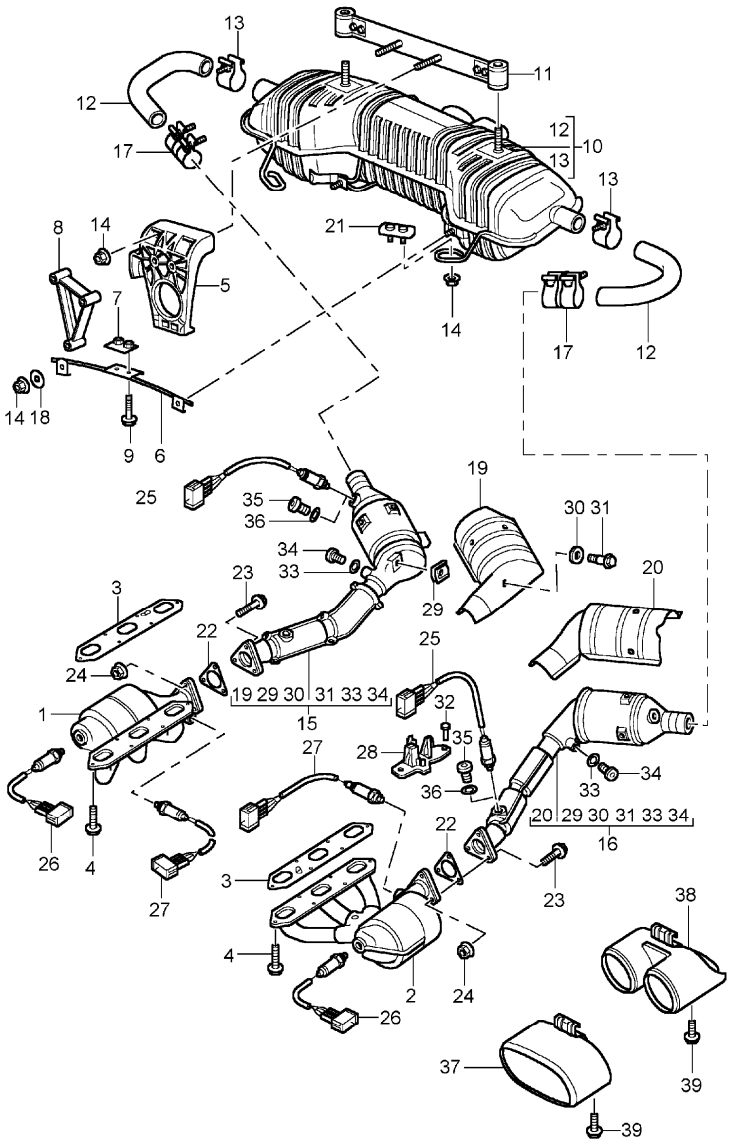


| Pos | Part Number | Description | Remark | Qty | Model |
|---|---|---|---|---|---|
| | | exhaust system<br>M 96.21/22<br>M 96.23/24 | <br>00-02<br>03- | | |
| (1) | 996 111 103 00 | exhaust manifold | 00-02<br>03- | 1 | M96.21/22<br>M96.23/24 |
| (2) | 996 111 104 00 | exhaust manifold | 00-02<br>03- | 1 | M96.21/22<br>M96.23/24 |
| 3 | A 996 111 107 52 | gasket | | 2 | |
| (3) | 996 111 107 54 | gasket | | 2 | |
| 4 | 900 378 131 00 | hexagon-head bolt<br>M 8 X 28 | | 12 | |
| 5 | 996 111 226 02 | support | | 1<br>1 | M96.22<br>M96.24 M 249<br>M96.21 M 249<br>M96.23 M 249 |
| (5) | 996 111 224 03 | support | | 1 | M96.21 M 480<br>M96.24 M 480 |
| 6 | 996 111 242 01 | support | | 1<br>1 | M96.21<br>M96.24<br>M96.22 M 249<br>M96.23 M 249 |
| 7 | 996 111 243 00 | retainer plate<br><br><br><br>for<br>additional support | | 1 | M96.21<br>M96.24<br>M96.22 M 249<br>M96.23 M 249 |
| 8 | 996 111 223 00 | adapter | | 1 | M 009/481 |
| 9 | 900 378 022 09 | hexagon-head bolt<br>M 8 X 25 | | 3 | M 249 |
| (9) | U 900 378 175 09 | hexagon-head bolt<br>M 8 X 65 | | 3 | M 481 |
| (9) | 900 378 212 09 | hexagon-head bolt<br>M 8 X 75 | | 3 | M 481 |
| 10 | 996 111 141 05 | muffler | 00-02 | 1 | M 008/660 |
| 10 | 996 111 141 11 | muffler | 03- | 1 | M 008/660<br>M 009/660 |
| (10) | 996 111 142 02 | muffler | 00-02 | 1 | M 008 |

| Pos | Part Number | Description | Remark | Qty | Model |
|---|---|---|---|---|---|
| (10) | 996 111 142 11 | muffler | 03- | 1 | M 008<br>M 008/074<br>M 008/114<br>M 008/193<br>M 009 |
| (10) | 996 111 151 01 | muffler | 00-02 | 1 | M 009 |
| (10) | 996 111 152 02 | muffler | 00-02 | 1 | M 009/660 |
| 11 | 996 111 241 00 | mounting<br>muffler | 00- | 1 | |
| 12 | 996 111 314 00 | connecting tube | 00- | 2 | |
| 13 | 996 111 209 00 | clip | | 2 | |
| 14 | 900 380 005 09 | hexagon nut<br>M 8 | | 8 | |
| 15 | 996 113 021 11 | catalytic converter | 00-02 | 1 | |
| 15 | 996 113 021 12 | catalytic converter | 03- | 1 | |
| (15) A | 996 113 025 02 | catalytic converter | | 1 | M 661 |
| (15) | 996 113 025 03 | catalytic converter | -02 | 1 | M 661 |
| (15) | 996 113 025 04 | catalytic converter | 03- | 1 | M 661 |
| 16 | 996 113 022 11 | catalytic converter | 00-02 | 1 | |
| 16 | 996 113 022 12 | catalytic converter | 03- | 1 | |
| (16) A | 996 113 026 02 | catalytic converter | | 1 | M 661 |
| (16) | 996 113 026 03 | catalytic converter | -02 | 1 | M 661 |
| (16) | 996 113 026 04 | catalytic converter | 03- | 1 | M 661 |
| 17 | 996 111 110 00 | sleeve | | 2 | |
| 18 | 900 035 004 02 | washer<br>R 9 | | 2 | |
| 19 | 996 113 421 00 | heat shield | | 1 | |
| 20 | 996 113 422 00 | heat shield | | 1 | |
| 21 | 996 113 311 01 | retainer plate | | 2 | |
| 22 | 996 113 113 00 | gasket | | 2 | M 96.21/22<br>M 96.23/24 |
| 23 | 900 074 287 02 | hexagon-head bolt<br>M 8 X 35 | | 6 | |
| 24 | 999 084 052 02 | hexagon nut<br>M 8 | | 5 | |
| 25 | 986 606 126 01 | oxygen sensor | -02 | 4 | |
| 25 | 986 606 226 00 | oxygen sensor | 03- | 4 | |
| -- | 000 043 207 07 | grease<br>for oxygen sensor | | 1 | |
| - | 999 650 075 40 | pin connector socket | | 1 | |
| - | 999 652 820 12 | connector | | 4 | |
| - | 999 704 161 40 | gasket | | 4 | |
| 28 | 986 606 105 01 | support | | 2 | |
| 29 | 999 507 413 09 | retaining clip | | 6 | |
| 30 | 900 151 007 02 | washer<br>7,4 | | 6 | |
| 31 | 999 507 430 09 | locking bolt<br>6 X 12 | | 6 | |
| 32 | 999 591 712 40 | expansion rivet<br>6,0 X 12,0 | | 4 | |
| 33 | 900 123 050 20 | sealing ring<br>8 X 11,5 | | 2 | |
| 34 | 900 083 080 00 | screw plug<br>8 X 1 X 10 | | 2 | |
| 35 | 900 219 015 00 | screw plug<br>18 X 1,5 | | 4 | |
| 36 | 900 123 009 20 | sealing ring<br>18 X 24 | | 4 | |
| 37 | 996 111 253 00 | ornamental exhaust pipe | 03- | 1 | M 009 |
| 38 | 996 111 254 00 | ornamental exhaust pipe | 03- | 1 | M 008 |
| 39 | 900 378 074 09 | hexagon-head bolt<br>M 8 X 16 | 03- | 2 | |

| Model | Year | MG | SG | Illustration | Restrictions | UPD | 18:10 | 30.07.2008 |
|---|---|---|---|---|---|---|---|---|
| 986 | 2004 | 3 | 01 | 301-00 | | 229 | | |

PORSCHE PET PORSCHE

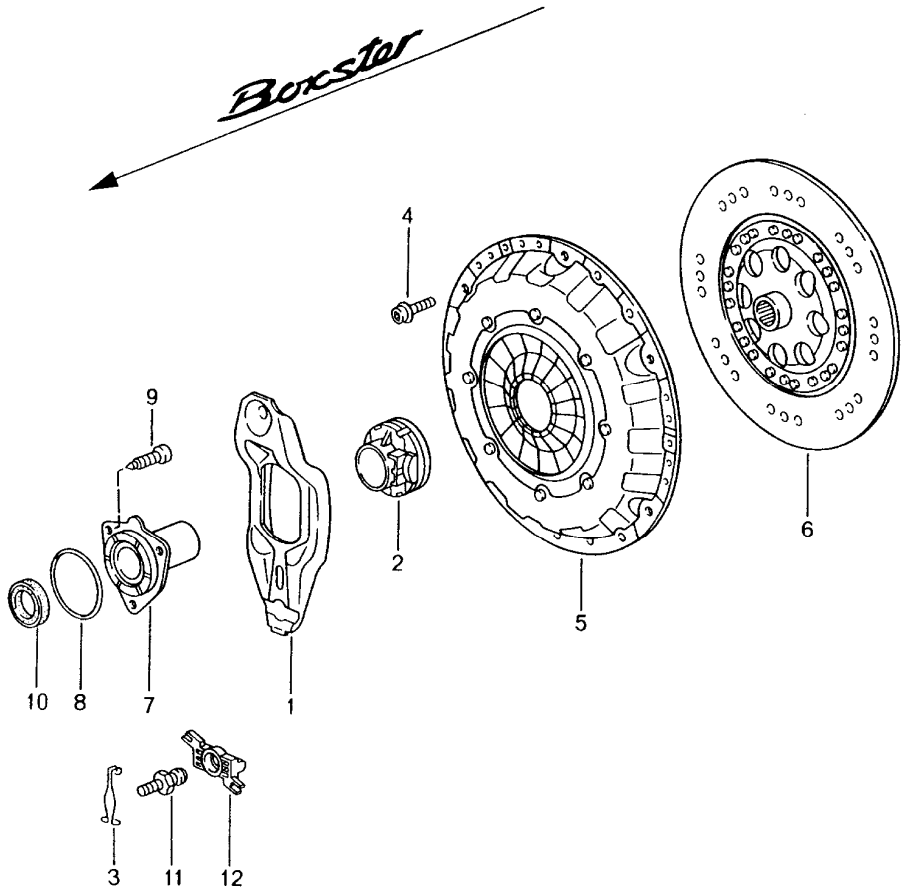


| Pos | Part Number | Description | Remark | Qty | Model |
|---|---|---|---|---|---|
| | | clutch | -99<br>00-02<br>03- | | M96.20<br>M96.22<br>M96.23 |
| 1 | 012 141 719 B | clutch release lever | | 1 | |
| 2 | 012 141 165 E | clutch release bearing | | 1 | |
| 3 | 012 141 741 | retaining spring | | 1 | |
| 4 | U 900 067 131 02 | screw<br>M 8 X 16 | | 6 | |
| (4) | 999 073 458 01 | screw<br>M 8 X 16 | | 6 | |
| 5 | 986 116 028 03 | pressure plate | -99 | 1 | M96.20 |
| 5 | 986 116 028 04 | pressure plate | 00- | 1 | M96.22 |
| 6 | A 986 116 014 06 | clutch plate | -03 | 1 | |
| 6 | 986 116 014 08 | clutch plate | 04- | 1 | |
| 7 | 012 141 180 B | guide sleeve | | 1 | |
| 8 | N 903 542 01 | o-ring<br>56,8 X 2,6 | | 1 | |
| 9 | N 903 663 01 | pan-head screw<br>M 8 X 22 | | 3 | |
| 10 | 016 311 113 C | radial shaft seal | | 1 | |
| 11 | 012 141 777 D | ball pin | | 1 | |
| 12 | 012 141 751 A | intermediate piece | | 1 | |
| - | 986 116 911 00 | repair kit<br>for<br>clutch<br>comprising: | | 1 | M96.20 |
| - | 986 116 028 03 | pressure plate | | 1 | |
| - | 986 116 014 06 | clutch plate | | 1 | |
| - | 012 141 165 E | clutch release bearing | | 1 | |
| - | 986 116 911 01 | repair kit<br>for<br>clutch<br>comprising: | | 1 | M96.22<br>M96.23 |
| - | 986 116 028 04 | pressure plate | | 1 | |
| - | 986 116 014 06 | clutch plate | | 1 | |

| Pos | Part Number | Description | Remark | Qty | Model | Pos | Part Number | Description | Remark | Qty | Model |
|---|---|---|---|---|---|---|---|---|---|---|---|
| - | 012 141 165 E | clutch release bearing | | 1 | | | | | | | |

| Model | Year | MG | SG | Illustration | Restrictions | UPD | 18:11 | 30.07.2008 | PET |
|---|---|---|---|---|---|---|---|---|---|
| 986 | 2004 | 3 | 01 | 301-01 | | 229 | | | |

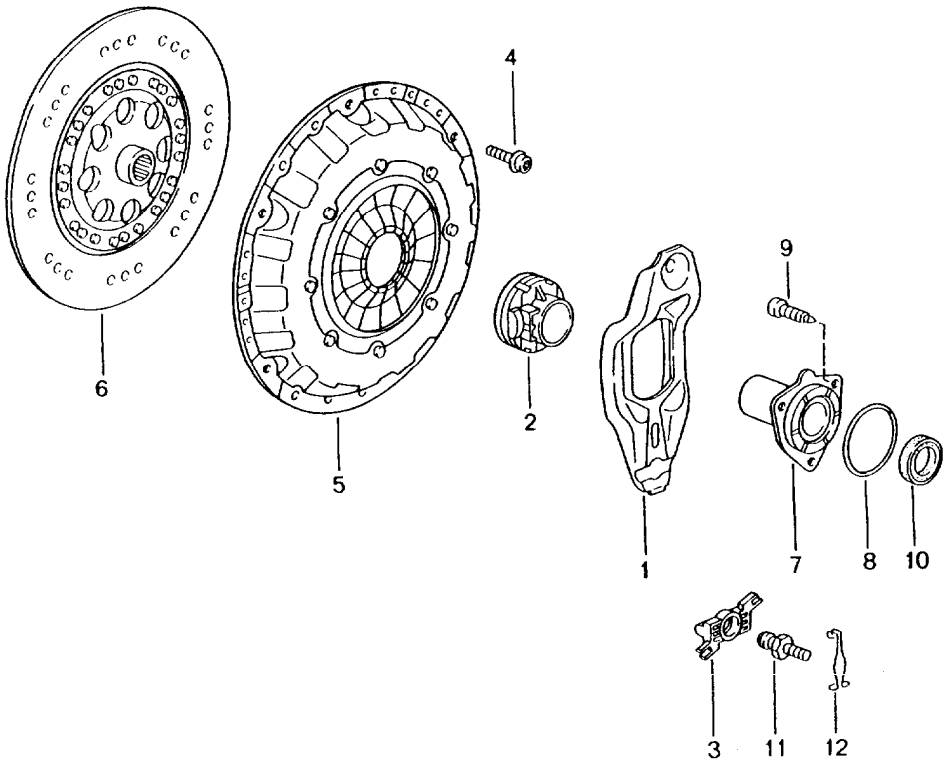


| Pos | Part Number | Description | Remark | Qty | Model |
|---|---|---|---|---|---|
| | | clutch | 00-<br>03- | | M96.21<br>M96.24 |
| 1 | 996 116 712 03 | clutch release lever | | 1 | |
| 2 | 996 116 080 04 | clutch release bearing | | 1 | |
| 3 | 012 141 741 | retaining spring | | 1 | |
| 4 | U 900 067 131 02 | screw<br>M 8 X 16 | | 6 | |
| (4) | 999 073 458 01 | screw<br>M 8 X 16 | | 6 | |
| 5 | 996 116 027 06 | pressure plate | | 1 | |
| 6 | 986 116 013 00 | clutch plate | | 1 | |
| 7 | 996 116 087 01 | guide sleeve | | 1 | |
| 8 | N 903 542 01 | o-ring<br>56,8 X 2,6 | | 1 | |
| 9 | N 903 663 01 | pan-head screw<br>M 8 X 22 | | 3 | |
| 10 | 016 311 113 C | radial shaft seal | | 1 | |
| 11 | 996 116 716 02 | ball pin | | 1 | |
| 12 | 012 141 751 A | intermediate piece | | 1 | |
| -- | 986 116 911 02 | repair kit<br>complete<br>for<br>clutch | | 1 | |
| | | comprising: | | | |
| -- | 996 116 027 06 | pressure plate | | 1 | |
| -- | 986 116 013 00 | clutch plate | | 1 | |
| -- | 996 116 080 04 | clutch release bearing | | 1 | |

| Model | Year | MG | SG | Illustration | Restrictions | UPD | 18:11 | 30.07.2008 | PET |
|---|---|---|---|---|---|---|---|---|---|
| 986 | 2004 | 3 | 01 | 301-05 | | 229 | | | |

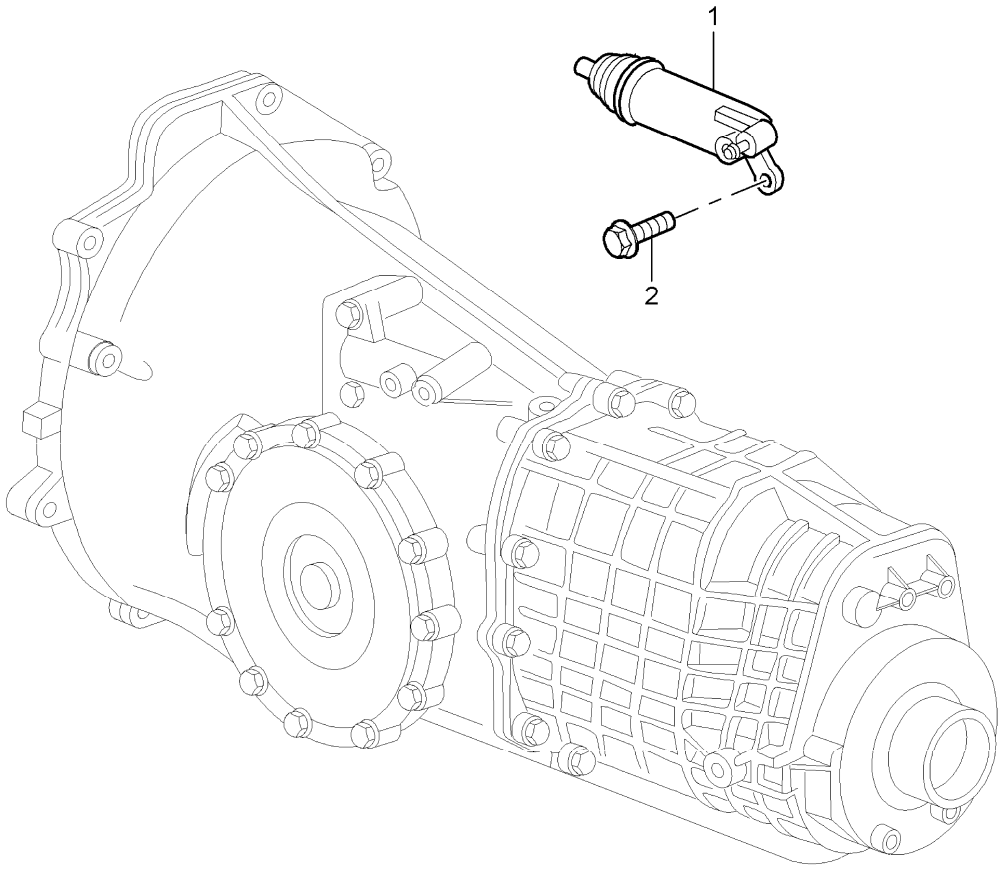


| Pos | Part Number | Description | Remark | Qty | Model |
|---|---|---|---|---|---|
| | | clutch release | | | G86.00/01 |
| 1 | A 8E0 721 257 F | clutch operating cylinder | | 1 | |
| 1 | A 8E0 721 257 B | clutch operating cylinder | | 1 | |
| 1 | 8E0 721 257 M | clutch operating cylinder<br>use also:<br>F >>98XS6 03069<br>986 423 113 25<br>986 423 677 25 | | 1 | |
| 2 | N 090 316 5 | combination screw<br>M 8 X 30 Z1 | | 2 | |

| Model | Year | MG | SG | Illustration | Restrictions | UPD | 18:11 | 30.07.2008 | PET |
|---|---|---|---|---|---|---|---|---|---|
| 986 | 2004 | 3 | 01 | 301-06 | | 229 | | | |

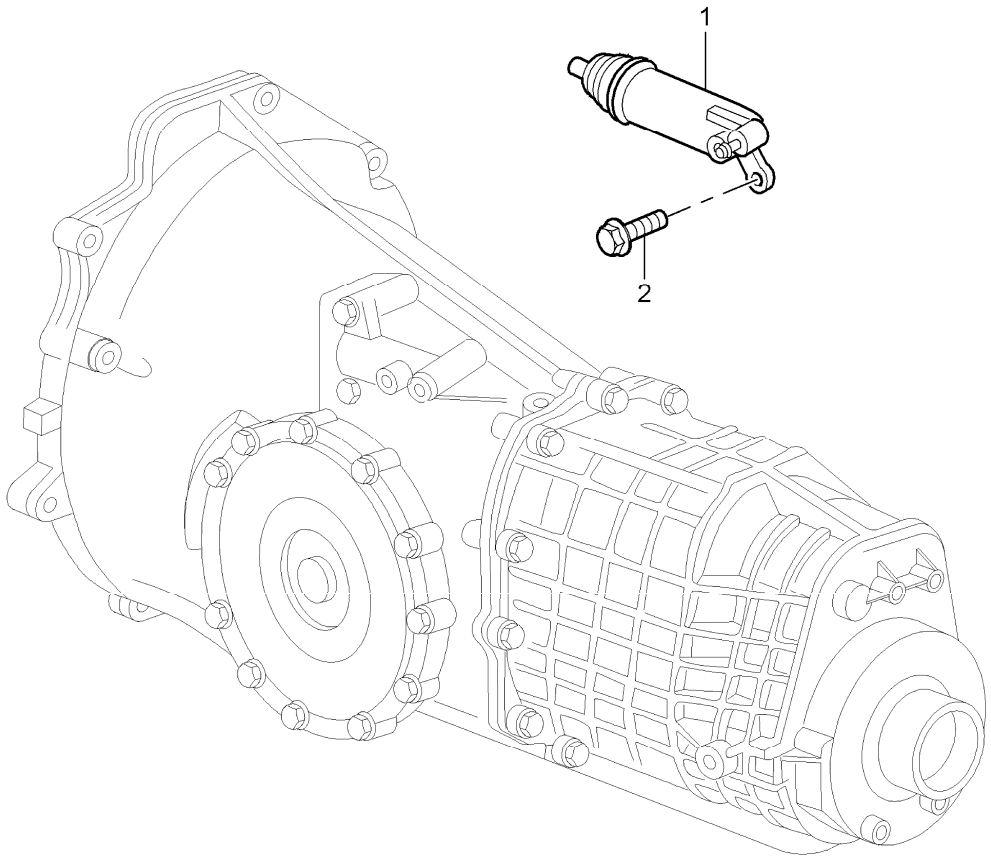


| Pos | Part Number | Description | Remark | Qty | Model |
|---|---|---|---|---|---|
| | | clutch release | 00- | | G86.20 |
| 1 | 986 116 237 00 | clutch operating cylinder | | 1 | |
| 2 | N 090 316 5 | combination screw<br>M 8 X 30 Z1 | | 1 | |

| Model | Year | MG | SG | Illustration | Restrictions | UPD | 18:11 | 30.07.2008 | PORSCHE PET PORSCHE |
|---|---|---|---|---|---|---|---|---|---|
| 986 | 2004 | 3 | 02 | 302-00 | | 229 | | | |

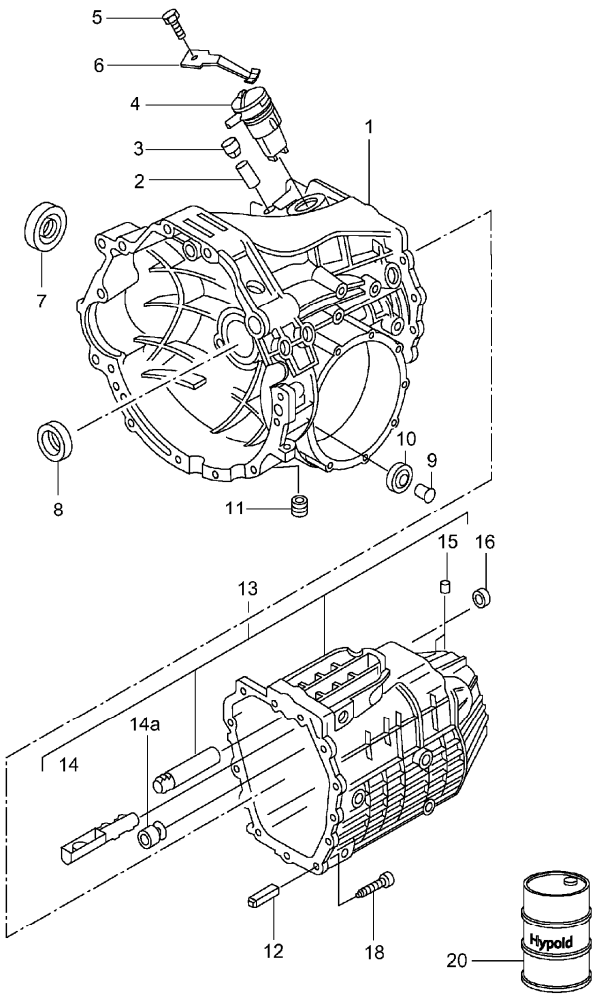


| Pos | Part Number | Description | Remark | Qty | Model |
|---|---|---|---|---|---|
| | | replacement transmission | -99 | | G86.00<br>M 481 |
| | | | 00- | | G86.01<br>M 481 |
| | | transmission case | | | |
| | | transmission<br>classification letter<br>attention | | | CWA/DVY/EFD/<br>GDW/GFW |
| - | A 986 300 910 00 | replacement transmission | 97 | 1 | CWA |
| - | A 986 300 010 00 | transmission<br>G >> 10 05 8 | 98 | 1 | CWA |
| - | A 986 300 010 01 | transmission<br>G 11 05 8 >> 10 01 9 | 99 | 1 | DVY |
| - | > 986 300 010 02 | transmission<br>G 11 01 9 >> | 99 | 1 | DVY |
| - | > 986 300 010 05 | transmission<br>G >> 09 02 3 | 00- | 1 | EFD |
| - | > 986 300 010 07 | transmission<br>G 10 02 3 >><br>F >>984S6 00484<br>F >>984U6 01373 | | 1 | GDW |
| - | > 986 300 010 06 | transmission<br>F 984S6 00485>><br>F 984U6 01374>> | | 1 | GFW |
| 1 | 012 301 103 AD | transmission case | | 1 | |
| 2 | 014 301 473 | guide sleeve<br>12 X 30 | -99 | 1 | |
| (2) | 012 301 474 A | guide sleeve<br>12 X 30 | 00- | 1 | |
| 3 | 014 301 485 | cap | | 1 | |
| 4 | 012 919 823 F | back-up light switch | | 1 | |
| - | 999 652 907 40 | plug socket | | 1 | |
| - | 999 652 694 12 | contact bush | | 2 | |
| - | 999 704 161 40 | gasket | | 2 | |
| - | 999 652 811 40 | stopper | | 3 | |
| 5 | N 040 255 2 | hexagon-head bolt<br>M 8 X 14 | | 1 | |
| 6 | 012 301 483 D | leaf spring | -99 | 1 | |

| Pos | Part Number | Description | Remark | Qty | Model |
|---|---|---|---|---|---|
| (6) | 012 301 483 G | leaf spring | 00- | 1 | |
| 7 | 016 409 399 B | radial shaft seal<br>45 X 60 X 8 | | 1 | |
| 8 | 016 311 113 C | radial shaft seal<br>12 M 6 X 14 | | 1 | CWA/DVY/EFD/<br>GDW |
| (8) | 012 311 113 B | radial shaft seal | | 1 | GFW |
| 9 | 012 301 183 A | bush<br>BM 8 X 20 | | 1 | |
| 10 | 012 301 143 | magnet | | 1 | CWA/DVY/EFD/<br>GDW |
| (10) | 01X 301 143 | magnet | | 1 | GFW |
| 11 | 111 301 127 E | screw plug<br>M 24 X 1,5 | | 1 | CWA/DVY/EFD/<br>GDW |
| (11) | WHT 001 937 | screw plug<br>M 24 X 1,5 | | 1 | GFW |
| 12 | 012 301 473 | sleeve<br>12 X 30 | | 1 | |
| 13 | 012 301 205 P | transmission cover<br>use also:<br>sleeve<br>012.311.429.P | | 1<br><br>1 | |
| 13 A | 012 301 205 J | transmission cover | | 1 | |
| 13 A | 012 301 205 L | transmission cover | | 1 | |
| 14 | 012 301 276 | cup | | 1 | CWA/DVY/EFD/<br>GDW |
| (14) | 012 301 276 A | cup | | 1 | GFW |
| 14A | 012 311 429 M | sleeve<br>23 X 37 X 28,3<br>only<br>for<br>transmission cover<br>012 301 205 N | | 1 | |
| 14A | 012 311 429 P | sleeve<br>23 X 39 X 28,3<br>only<br>for<br>transmission cover<br>012 301 205 P | | 1 | |
| 15 | 012 301 115 | stopper | | 2 | |
| 16 | 012 301 457 C | shaft sealing ring<br>16 X 24 X 6 | | 1 | |
| 18 | 012 301 268 E | torx screw<br>M 8 X 44 | -02 | 13 | |
| (18) | 012 301 282 A | torx screw<br>M 8 X 48 | 03- | 13 | |
| 20 | 000 043 204 71 | transmission oil<br>HYPOID<br>20 LTR.<br>container | | X | |

| Model | Year | MG | SG | Illustration | Restrictions | UPD | 18:11 | 30.07.2008 | PET |
|---|---|---|---|---|---|---|---|---|---|
| 986 | 2004 | 3 | 02 | 302-01 | | 229 | | | |

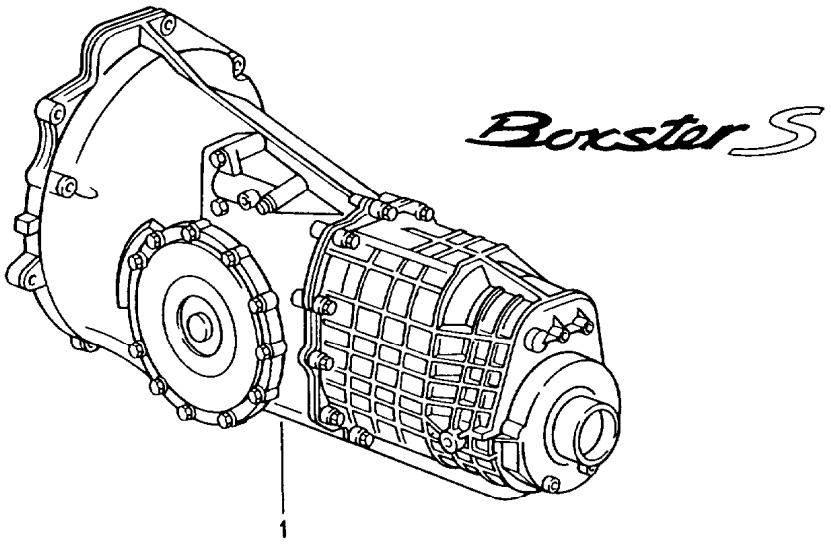


| Pos | Part Number | Description | Remark | Qty | Model |
|---|---|---|---|---|---|
| | | replacement transmission | 00- | | G86.20<br>M 480 |
| | | ready for installation<br>use also:<br>996.424.165.02<br>999.073.209.09 | | <br><br>1<br>2 | |
| 1 | 986 300 010 21 | transmission | -02 | 1 | |
| 1 | 986 300 010 22 | transmission | 03- | 1 | |

| Model | Year | MG | SG | Illustration | Restrictions | UPD | 18:12 | 30.07.2008 |
|---|---|---|---|---|---|---|---|---|
| 986 | 2004 | 3 | 02 | 302-05 | | 229 | | |

PORSCHE PET PORSCHE

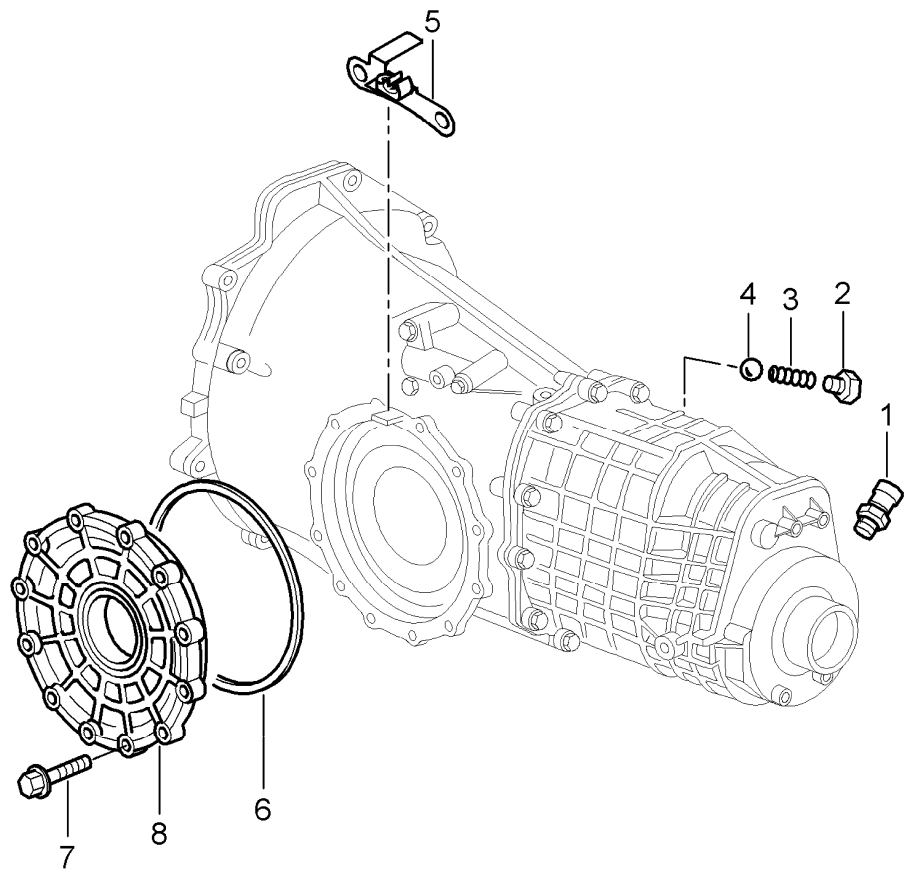


| Pos | Part Number | Description | Remark | Qty | Model |
|---|---|---|---|---|---|
| | | transmission<br>single parts | 00- | | G86.20 |
| 1 | 996 606 133 00 | switch | | 1 | |
| 2 | 900 124 023 02 | screw plug<br>M 10 X 1 | | 4 | |
| 3 | 996 303 245 00 | compression spring | | 1 | |
| 4 | 900 108 064 00 | ball<br>8 | | 4 | |
| 5 | 996 423 677 00 | support | | 1 | |
| 6 | 996 301 315 00 | o-ring<br>190 X 3 | | 1 | |
| 7 | 996 301 317 00 | hexagon-head bolt<br>M 8 X 35 | | X | |
| 8 | 986 301 312 00 | transmission cover<br>lateral | | 1 | |

| Model | Year | MG | SG | Illustration | Restrictions | UPD | 18:12 | 30.07.2008 | PET |
|---|---|---|---|---|---|---|---|---|---|
| 986 | 2004 | 3 | 02 | 302-06 | | 229 | | | |

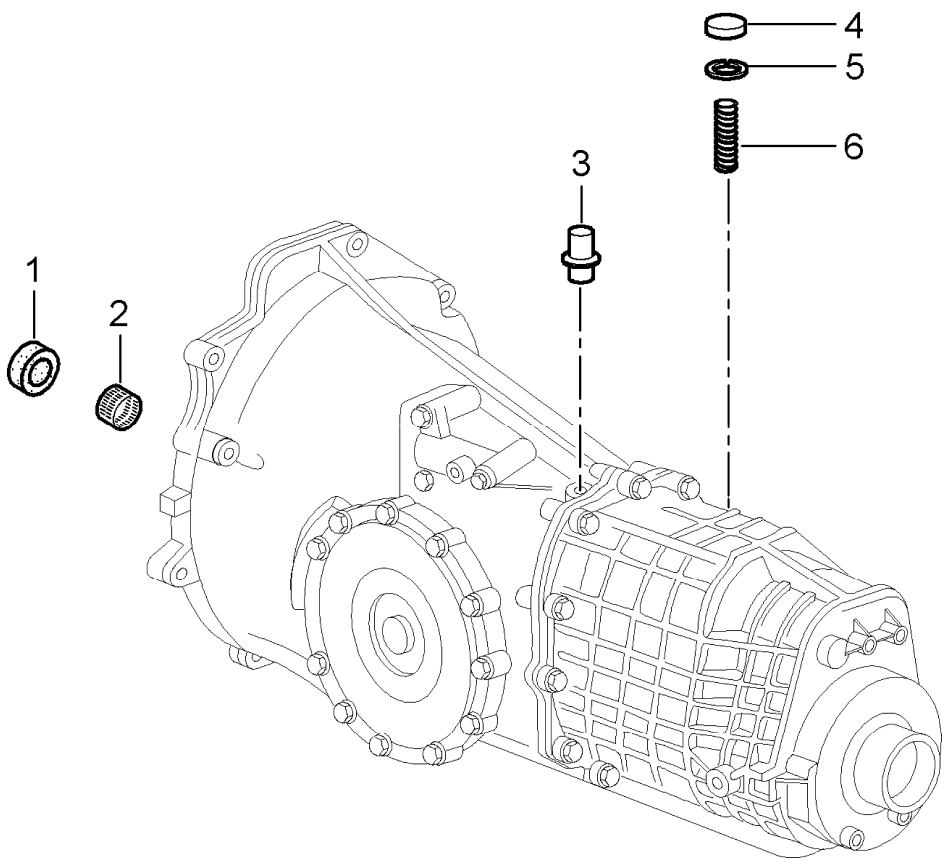


| Pos | Part Number | Description | Remark | Qty | Model |
|---|---|---|---|---|---|
| | | transmission<br>single parts | 00- | | G86.20 |
| 1 | 996 302 131 00 | shaft sealing ring<br>28 X 40 X 7,5 | | 1 | |
| 2 | 996 301 814 00 | needle sleeve<br>30 X 37 X 16 | | 1 | |
| 3 | 996 301 071 00 | bleeder<br>17 X 12 X 28,1 | | 1 | |
| 4 | 996 303 257 00 | lid<br>20 X 4 | | 1 | |
| 5 | 900 042 003 01 | circlip<br>20 X 1 | | 1 | |
| 6 | 996 303 255 00 | compression spring | | 1 | |

| Model | Year | MG | SG | Illustration | Restrictions | UPD | 18:12 | 30.07.2008 | PET |
|---|---|---|---|---|---|---|---|---|---|
| 986 | 2004 | 3 | 02 | 302-07 | | 229 | | | |

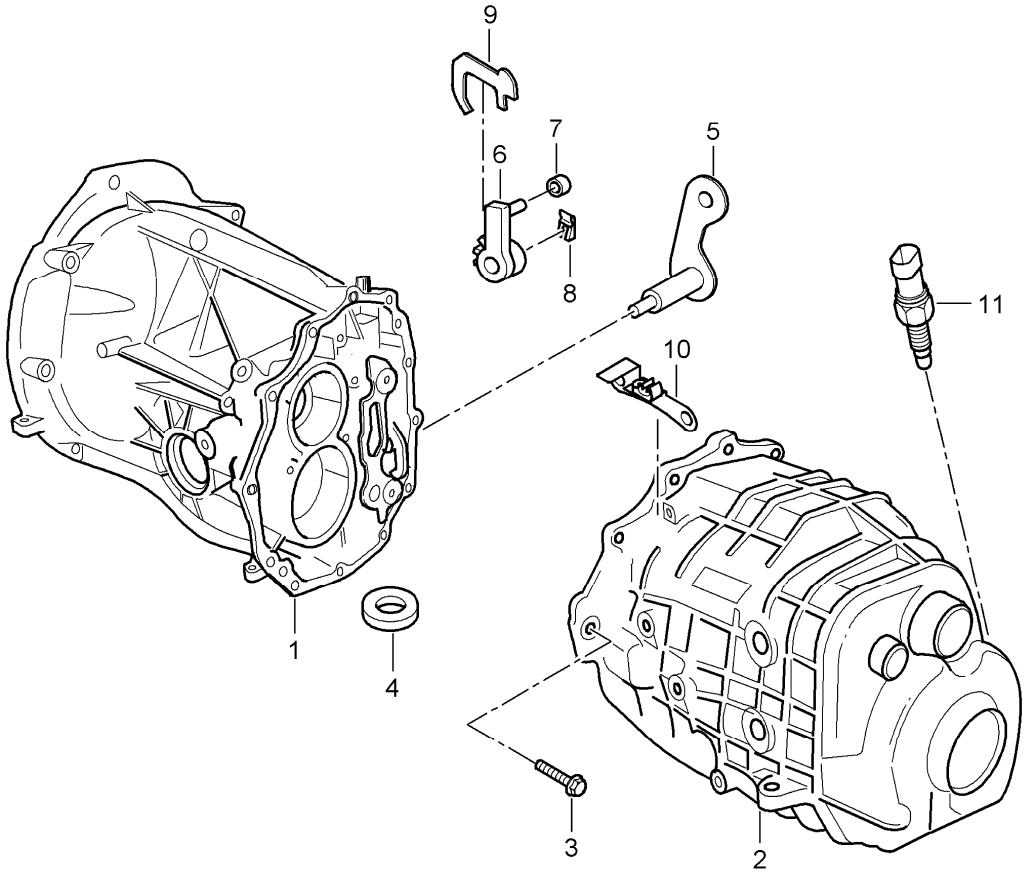


| Pos | Part Number | Description | Remark | Qty | Model |
|---|---|---|---|---|---|
| | | gear housing<br>transmission cover | | | G86.20 |
| 1 | 986 301 020 00 | transmission case | | 1 | |
| 2 | --- | see illustrations<br>3/02/08 | | 1 | |
| 3 | 996 301 317 00 | hexagon-head bolt<br>M 8 X 35 | | 13 | |
| 4 | 996 301 804 00 | magnet | | 1 | |
| 5 | 996 303 055 01 | selector lever | | 1 | |
| 6 | 996 303 057 00 | pinion | | 1 | |
| 7 | 996 303 303 00 | roller<br>20 X 8 X 8 | | 1 | |
| 8 | 996 303 383 00 | lock | | 1 | |
| 9 | 996 303 053 00 | selector lever | | 1 | |
| 10 | --- | see illustrations<br>7/02/08 | | 1 | |
| 11 | --- | see illustrations<br>3/02/05 | | 1 | |

| Model | Year | MG | SG | Illustration | Restrictions | UPD | 18:12 | 30.07.2008 | PET |
|---|---|---|---|---|---|---|---|---|---|
| 986 | 2004 | 3 | 02 | 302-08 | | 229 | | | |

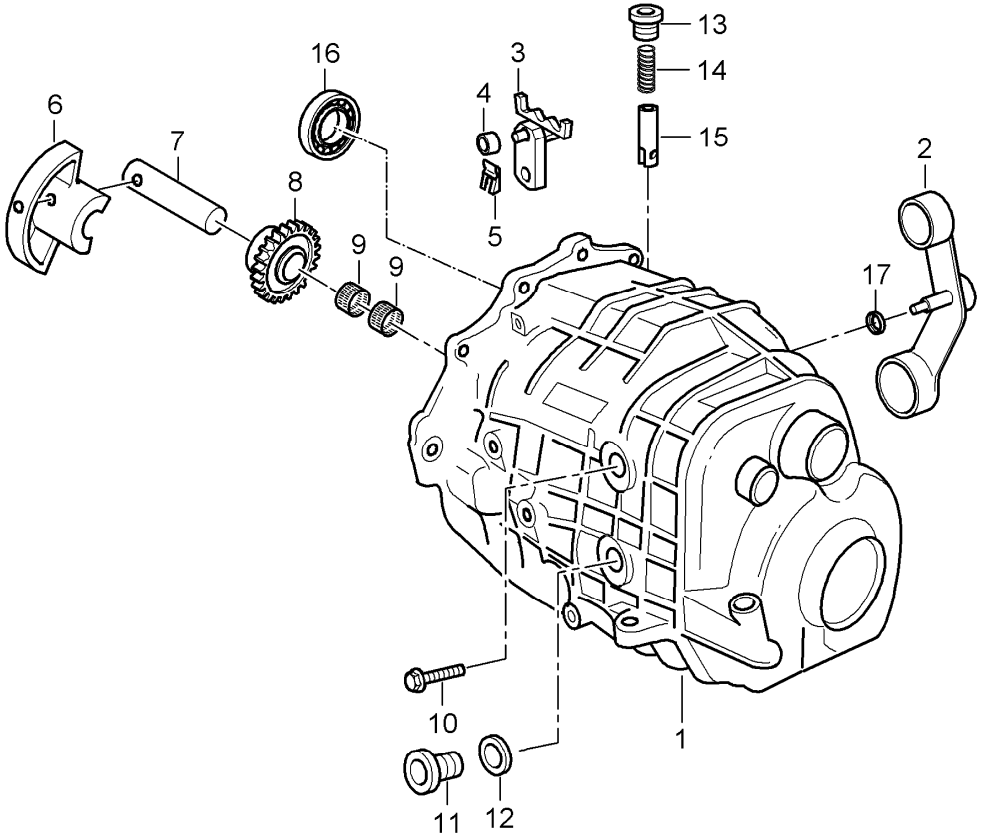


| Pos | Part Number | Description | Remark | Qty | Model |
|---|---|---|---|---|---|
| | | gear housing<br>transmission cover | | | G86.20 |
| 1 | 986 301 023 00 | transmission case<br>rear | | 1 | |
| 2 | 986 303 041 00 | gearshift lever | | 1 | |
| 3 | 996 303 033 00 | shift segment | | 1 | |
| 4 | 996 303 303 00 | roller<br>20 X 8 X 8 | | 1 | |
| 5 | 996 303 383 00 | lock<br>20 X 26 X 17 | | 1 | |
| 6 | 986 302 225 00 | segment | | 1 | |
| 7 | 996 302 228 00 | bolt | | 1 | |
| 8 | 996 302 226 00 | reverse idler gear | | 1 | |
| 9 | 996 302 224 00 | needle cage<br>20 X 26 X 17 | | 1 | |
| 10 | 996 302 223 00 | hexagon-head bolt<br>M 8 X 55 | | 1 | |
| 11 | 900 219 001 02 | screw plug<br>M 22 X 1,5 | | 1 | |
| 12 | 900 123 118 30 | sealing ring<br>A22 X 27 | | 1 | |
| 13 | 996 303 237 00 | screw plug<br>M 18 X 1,5 | | 1 | |
| 14 | 996 303 235 00 | compression spring | | 1 | |
| 15 | 996 303 035 00 | bolt | | 1 | |
| 16 | 996 301 808 00 | cylindrical-roller bearing<br>drive shaft | | 1 | |
| 17 | 996 303 517 01 | shaft sealing ring<br>15X21X7 | | 1 | |

| Model | Year | MG | SG | Illustration | Restrictions | UPD | 18:13 | 30.07.2008 |
|---|---|---|---|---|---|---|---|---|
| 986 | 2004 | 3 | 03 | 303-00 | | 229 | | |

PORSCHE PET PORSCHE

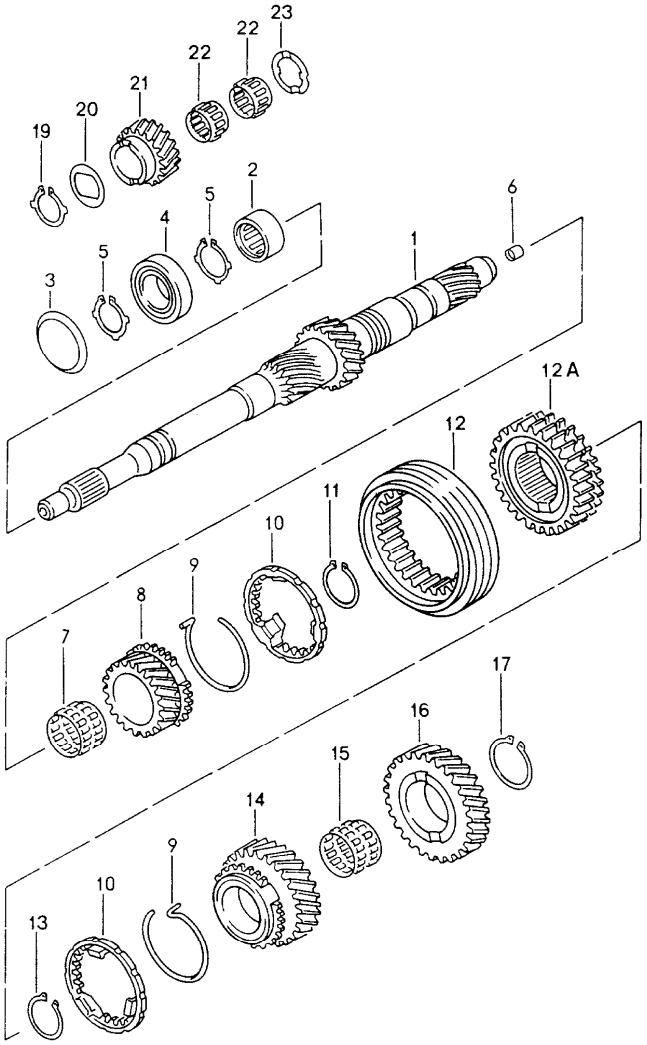


| Pos | Part Number | Description | Remark | Qty | Model |
|---|---|---|---|---|---|
| | | gears and shafts | -99<br>00- | | G86.00<br>G86.01 |
| | | transmission<br>classification letter<br>attention | | | CWA/DVY/EFD/<br>GDW/GFW |
| 1 | 012 311 105 AG | drive shaft | | 1 | |
| 2 | 012 311 123 D | needle sleeve<br>27 X 41 X 23 | | 1 | |
| 3 | 012 311 443 | cup spring<br>42 X 58 X 2 | | 1 | |
| 4 | 012 311 445 E | deep-groove ball bearing<br>25 X 58 X 16 | -03 | 1 | |
| (4) | 012 311 445 G | deep-groove ball bearing<br>25 X 58 X 16 | 04- | 1 | |
| 5 | N 902 941 02 | circlip<br>24,9 X 1,45 | | X | |
| (5) | N 902 941 14 | circlip<br>24,9 X 1,54 | | X | |
| (5) | N 902 941 15 | circlip<br>24,9 X 1,63 | | X | |
| (5) | N 902 941 16 | circlip<br>24,9 X 1,72 | | X | |
| (5) | N 902 941 17 | circlip<br>24,9 X 1,81 | | 1 | |
| (5) | N 902 941 18 | circlip<br>24,9 X 1,9 | | X | |
| (5) | N 902 941 19 | circlip<br>24,9 X 1,99 | | X | |
| (5) | N 902 941 20 | circlip<br>24,9 X 2,08 | | X | |
| (5) | N 902 941 11 | circlip<br>24,9 X 2,17 | | X | |
| 6 | 012 311 111 A | sleeve<br>13 X 14 X 10,8 | | 1 | |
| 7 | 012 311 213 J | needle cage<br>38 X 43 X 29,5 | | 1 | |
| 8 | 012 311 285 BJ | shifting gear<br>3rd gear<br>Z = 40 : 28 | | 1 | CWA/DVY/EFD/<br>GDW |

| Pos | Part Number | Description | Remark | Qty | Model |
|---|---|---|---|---|---|
| (8) | 012 311 131 CB | shifting gear<br>3rd gear<br>Z = 40 : 28 | | 1 | GFW |
| 9 | 012 311 312 A | spring<br>3rd/4th gear<br>G >> 10 05 8 | | 2 | CWA |
| (9) | 012 311 312 D | spring<br>3rd/4th gear<br>G 11 05 8 >> | | 2 | DVY/EFD/GDW |
| (9) | 01X 311 312 A | retaining spring<br>3rd/4th gear | | 2 | GFW |
| 10 | 012 311 295 D | synchroniser ring<br>3rd/4th gear<br>G >> 10 05 8 | | 2 | CWA |
| (10) | 012 311 295 F | synchroniser ring<br>3rd/4th gear<br>G 11 05 8 >> | | 2 | DVY/EFD/GDW |
| (10) | 01X 311 295 J | synchroniser ring<br>3rd/4th gear | | 2 | GFW |
| 11 | N 902 945 01 | circlip<br>38 X 2 | | 1 | |
| 12 | 012 311 315 B | operating sleeve<br>3rd/4th gear | | 1 | CWA/DVY/EFD/GDW |
| (12) | 01X 311 315 | operating sleeve<br>3rd/4th gear | | 1 | GFW |
| 12A | 012 311 309 B | synchronising hub<br>3rd/4th gear | | 1 | CWA/DVY/EFD/GDW |
| (12A) | 01X 311 309 | synchronising hub<br>3rd/4th gear | | 1 | GFW |
| 13 | N 902 944 01 | circlip<br>37 X 1,9 | | X | |
| (13) | N 902 944 02 | circlip<br>37 X 1,93 | | X | |
| (13) | N 902 944 03 | circlip<br>37 X 1,96 | | X | |
| (13) | N 902 944 04 | circlip<br>37 X 1,99 | | X | |
| (13) | N 902 944 05 | circlip<br>37 X 2,02 | | X | |
| (13) | N 902 944 06 | circlip<br>37 X 2,05 | | X | |
| 14 | A 012 311 351 AH | shifting gear<br>4th speed<br>Z = 35 : 34 | | 1 | |
| (14) | 012 311 351 AN | shifting gear<br>4th speed<br>Z = 35 : 34 | | 1 | CWA |
| (14) | 012 311 351 AT | shifting gear<br>4th speed<br>Z = 35 : 34 | | 1 | DVY |
| (14) | 012 311 351 BK | shifting gear<br>4th speed<br>Z = 36 : 33 | | 1 | EFD/GDW |
| (14) | 012 311 149 CQ | shifting gear<br>4th speed<br>Z = 36 : 33 | | 1 | GFW |
| 15 | 012 311 115 F | needle cage<br>37 X 42 X 29,8 | | 1 | |
| 16 | 012 311 159 DL | gear wheel<br>5th gear<br>Z = 30 : 38 | | 1 | CWA/DVY |
| (16) | 012 311 159 CH | gear wheel<br>5th gear<br>Z = 31 ; 37 | | 1 | EFD |
| 17 | N 902 942 02 | circlip<br>36 X 1,9 | | X | |
| (17) | N 902 942 03 | circlip<br>36 X 1,93 | | X | |
| (17) | N 902 942 04 | circlip<br>36 X 1,96 | | X | |
| (17) | N 902 942 05 | circlip<br>36 X 1,99 | | X | |
| (17) | N 902 942 06 | circlip<br>36 X 2,02 | | X | |
| 18 | 012 311 429 M | sleeve<br>23 X 37 X 28,3 | | 1 | CWA/DVY/EFD/GDW |
| (18) | 012 311 429 P | sleeve<br>23 X 39 X 28,2 | | 1 | GFW |

| Pos | Part Number | Description | Remark | Qty | Model |
|---|---|---|---|---|---|
| 19 | N 902 951 01 | circlip<br>22 X 1,7<br>4th speed | | 1 | |
| 20 | 012 311 518 | supporting plate<br>3rd gear | | 1 | |
| 21 | 012 311 531 E | reverse idler gear | | 1 | |
| 22 | 012 311 523 G | needle cage<br>22 X 30 X 16 | | 2 | |
| 23 | 012 311 517 | thrust washer | | 1 | |

| Pos | Part Number | Description | Remark | Qty | Model |
|---|---|---|---|---|---|

| Model | Year | MG | SG | Illustration | Restrictions | UPD | 18:13 | 30.07.2008 | PET |
|---|---|---|---|---|---|---|---|---|---|
| 986 | 2004 | 3 | 03 | 303-01 | | 229 | | | |

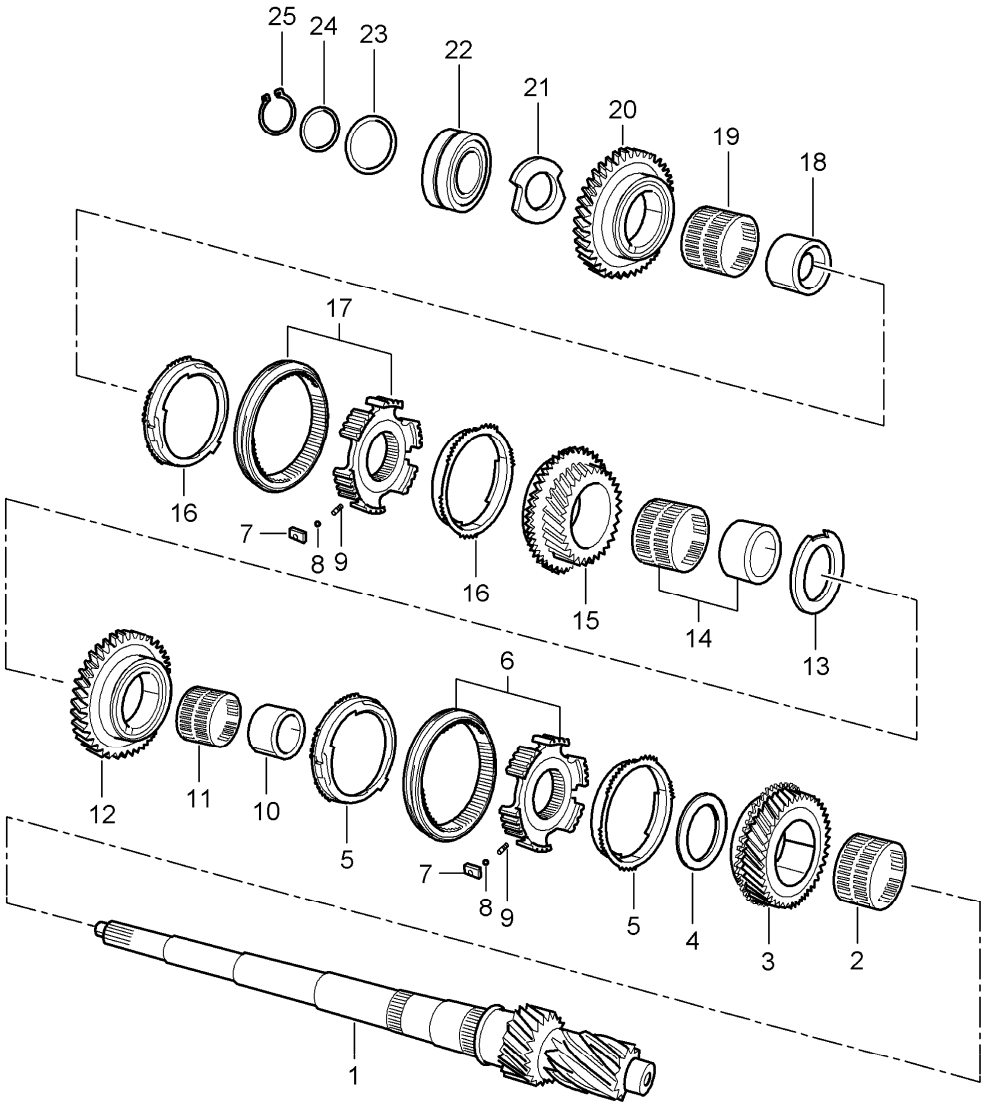


| Pos | Part Number | Description | Remark | Qty | Model |
|---|---|---|---|---|---|
| | | gears and shafts | | | G86.20 |
| 1 | 986 302 101 00 | drive shaft<br>1st/2nd gear | | 1 | |
| 2 | 996 302 811 00 | needle-roller bearing | | 1 | |
| 3 | 996 302 075 00 | loose gear wheel<br>5th gear | | 1 | |
| 4 | 996 302 295 00 | thrust washer<br>5th gear | | 1 | |
| 5 | 996 304 411 00 | synchroniser ring | | 2 | |
| 6 | 996 304 041 00 | guide sleeve<br>5th and 6th gear | | 1 | |
| 7 | 996 304 451 00 | stone | | 6 | |
| 8 | 900 108 058 00 | ball | | 6 | |
| 9 | 996 304 461 00 | compression spring | | 6 | |
| 10 | 996 302 266 00 | inner ring | | 1 | |
| 11 | 996 302 812 00 | needle-roller bearing<br>white | | 1 | |
| (11) | 996 302 812 01 | needle-roller bearing<br>blue | | 1 | |
| (11) | 996 302 812 02 | needle-roller bearing<br>green | | 1 | |
| 12 | 996 302 076 15 | loose gear wheel<br>6th gear | | 1 | |
| 13 | 996 302 296 00 | thrust washer<br>3. + 6. Gang | | 1 | |
| 14 | 996 302 813 00 | needle-roller bearing | | 1 | |
| 15 | 996 302 073 00 | loose gear wheel<br>3rd gear | | 1 | |
| 16 | 996 304 411 00 | synchroniser ring | | 2 | |
| 17 | 996 304 041 01 | guide sleeve | | 1 | |
| 18 | 996 302 264 00 | inner ring | | 1 | |
| 19 | 996 302 814 00 | needle-roller bearing<br>white | | 1 | |
| (19) | 996 302 814 01 | needle-roller bearing<br>blue | | 1 | |

| Pos | Part Number | Description | Remark | Qty | Model |
|---|---|---|---|---|---|
| (19) | 996 302 814 02 | needle-roller bearing<br>green | | 1 | |
| 20 | 996 302 074 00 | loose gear wheel<br>4th speed | | 1 | |
| 21 | 996 302 267 00 | spacer ring | | 1 | |
| 22 | 996 302 807 00 | angular-contact bearing | | 1 | |
| 23 | 996 302 124 00 | shim<br>56 X 72 X 0,50 | | 1 | |
| (23) | 996 302 124 01 | shim<br>56 X 72 X 0,55 | | 1 | |
| (23) | 996 302 124 02 | shim<br>56 X 72 X 0,60 | | 1 | |
| (23) | 996 302 124 03 | shim<br>56 X 72 X 0,65 | | 1 | |
| 24 | 996 302 173 00 | shim<br>35 X 45 X 1,2 | | 1 | |
| (24) | 996 302 173 01 | shim<br>35 X 45 X 1,3 | | 1 | |
| (24) | 996 302 173 02 | shim<br>35 X 45 X 1,4 | | 1 | |
| (24) | 996 302 173 03 | shim<br>35 X 45 X 1,5 | | 1 | |
| (24) | 996 302 173 04 | shim<br>35 X 45 X 1,6 | | 1 | |
| (24) | 996 302 173 05 | shim<br>35 X 45 X 1,7 | | 1 | |
| (24) | 996 302 173 06 | shim<br>35 X 45 X 1,8 | | 1 | |
| (24) | 996 302 173 07 | shim<br>35 X 45 X 1,9 | | 1 | |
| (24) | 996 302 173 08 | shim<br>35 X 45 X 2,0 | | 1 | |
| (24) | 996 302 173 09 | shim<br>35 X 45 X 2,1 | | 1 | |
| (24) | 996 302 173 10 | shim<br>35 X 45 X 2,2 | | 1 | |
| (24) | 996 302 173 11 | shim<br>35 X 45 X 2,3 | | 1 | |
| (24) | 996 302 173 12 | shim<br>35 X 45 X 2,4 | | 1 | |
| (24) | 996 302 173 13 | shim<br>35 X 45 X 2,5 | | 1 | |
| 25 | 996 302 810 00 | circlip<br>35 X 2,25 | | 1 | |
| (25) | 996 302 810 01 | circlip<br>35 X 2,30 | | 1 | |
| (25) | 996 302 810 02 | circlip<br>35 X 2,35 | | 1 | |
| (25) | 996 302 810 03 | circlip<br>35 X 2,40 | | 1 | |
| (25) | 996 302 810 04 | circlip<br>35 X 2,45 | | 1 | |

| Model | Year | MG | SG | Illustration | Restrictions | UPD | 18:13 | 30.07.2008 |
|---|---|---|---|---|---|---|---|---|
| 986 | 2004 | 3 | 03 | 303-05 | | 229 | | |

PORSCHE PET PORSCHE

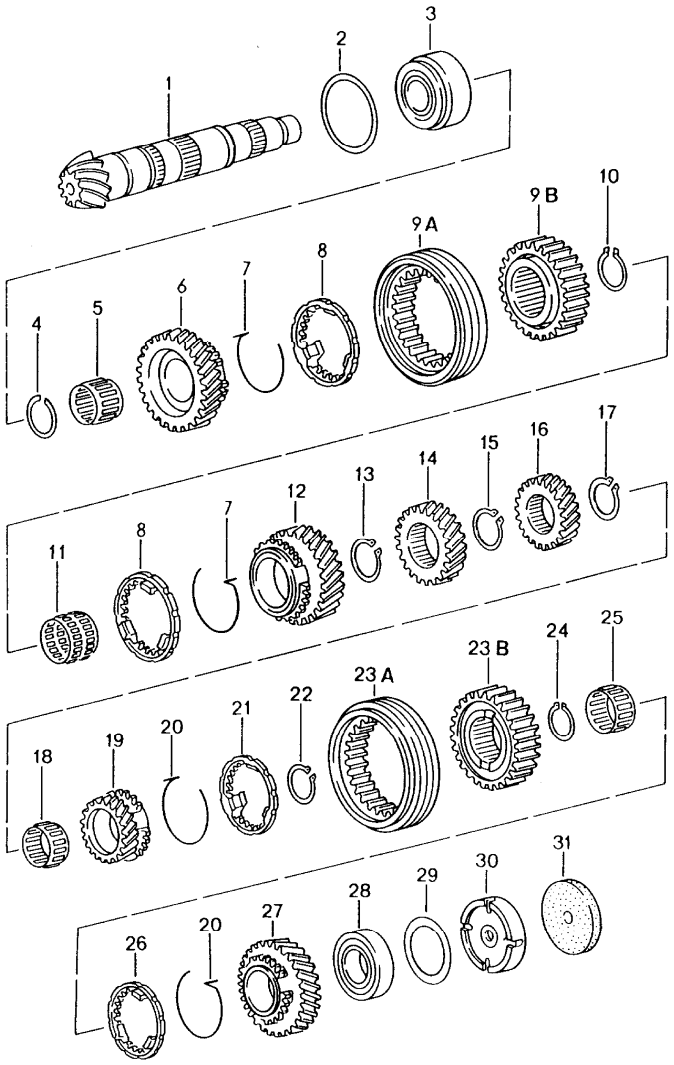


| Pos | Part Number | Description | Remark | Qty | Model |
|---|---|---|---|---|---|
| | | gears and shafts | -99<br>00- | | G86.00<br>G86.01<br>M481 |
| | | transmission<br>classification letter<br>attention | | | CWA/DVY/EFD/<br>GDW |
| 1 | --- | output shaft | | 1 | |
| 2 | 012 311 391 | adjusting shim<br>0,4 | | X | |
| (2) | 012 311 391 A | adjusting shim<br>0,45 | | X | |
| (2) | 012 311 391 B | adjusting shim<br>0,5 | | X | |
| (2) | 012 311 391 C | adjusting shim<br>0,55 | | X | |
| (2) | 012 311 391 D | adjusting shim<br>0,6 | | X | |
| (2) | 012 311 391 E | adjusting shim<br>0,65 | | X | |
| (2) | 012 311 391 F | adjusting shim<br>0,7 | | X | |
| (2) | 012 311 391 G | adjusting shim<br>0,75 | | X | |
| 3 | 012 311 220 A | taper roller bearing<br>48,6 X 88 X 21,5 | | 1 | |
| 4 | N 902 950 01 | circlip<br>A 48,5 X 2,00 | | X | |
| (4) | N 902 950 08 | circlip<br>A 48,5 X 2,03 | | X | |
| (4) | N 902 950 09 | circlip<br>A 48,5 X 2,09 | | X | |
| (4) | N 902 950 10 | circlip<br>A 48,5 X 2,12 | | X | |
| (4) | N 902 950 11 | circlip<br>48,5 X 2,15 | | X | |
| 5 | 012 311 207 E | needle cage<br>1st gear<br>48,5 X 52,5 X 26,4 | | 1 | |

| Pos | Part Number | Description | Remark | Qty | Model |
|---|---|---|---|---|---|
| 6 | 012 311 257 J | shifting gear<br>1st gear<br>Z = 35 : 10 | | 1 | |
| 7 | A 012 311 311 A | spring<br>1st/2nd gear<br>G >> 10 05 8 | | 2 | |
| (7) | 012 311 311 D | spring<br>1st/2nd gear<br>G 11 05 8 >> | | 2 | |
| 8 | A 012 311 247 E | synchroniser ring<br>1st/2nd gear<br>G >> 10 05 8 | | 2 | |
| (8) | 012 311 247 F | synchroniser ring<br>1st/2nd gear<br>G 11 05 8 >> | | 2 | |
| 9A | 012 311 255 A | operating sleeve<br>1st/2nd gear | | 1 | |
| 9B | 012 311 243 A | synchronising hub<br>1st/2nd gear | | 1 | |
| 10 | N 902 947 01 | circlip<br>47 X 1,9 | | X | |
| (10) | N 902 947 02 | circlip<br>47 X 1,93 | | X | |
| (10) | N 902 947 03 | circlip<br>47 X 1,96 | | X | |
| (10) | N 902 947 04 | circlip<br>47 X 1,99 | | X | |
| (10) | N 902 947 05 | circlip<br>47 X 2,02 | | X | |
| 11 | 012 311 229 K | needle cage<br>2nd gear<br>47 X 52 X 26,6 | | 1 | |
| 12 | 012 311 271 F | shifting gear<br>2nd gear<br>Z = 36 : 17 | | 1 | |
| 13 | N 902 947 06 | circlip<br>47 X 2,5 | | 1 | |
| 14 | 012 311 131 BJ | gear wheel<br>3rd gear | | 1 | |
| 15 | N 902 946 02 | circlip<br>46 X 1,9 | | X | |
| (15) | N 902 946 09 | circlip<br>46 X 1,94 | | X | |
| (15) | N 902 946 10 | circlip<br>46 X 1,98 | | X | |
| (15) | N 902 946 06 | circlip<br>46 X 2,02 | | X | |
| (15) | N 902 946 11 | circlip<br>46 X 2,06 | | X | |
| 16 | 012 311 149 AH | gear wheel<br>4th speed<br>Z = 35 : 34 | | 1 | CWA |
| (16) | 012 311 149 AT | gear wheel<br>4th speed<br>Z = 35 : 34 | | 1 | DVY |
| (16) | 012 311 149 BT | gear wheel<br>4th speed<br>Z = 36 : 33 | | 1 | EFD/GDW |
| 17 | N 902 952 07 | circlip<br>42 X 1,86 | | X | CWA |
| (17) | N 902 952 02 | circlip<br>42 X 1,9 | | X | CWA |
| (17) | N 902 952 08 | circlip<br>42 X 1,94 | | X | CWA |
| (17) | N 902 952 09 | circlip<br>42 X 1,98 | | X | CWA |
| (17) | N 902 945 01 | circlip<br>38 X 2 | | X | DVY/EFD/GDW |
| (17) | N 902 945 02 | circlip<br>38 X 2,16 | | X | DVY/EFD/GDW |
| (17) | N 902 945 03 | circlip<br>38 X 2,20 | | X | DVY/EFD/GDW |
| (17) | N 902 945 04 | circlip<br>38 X 2,24 | | X | DVY/EFD/GDW |
| (17) | N 902 945 05 | circlip<br>38 X 2,28 | | X | DVY/EFD/GDW |
| 18 | 012 311 116 F | needle cage<br>5th gear<br>38 X 43 X 25 | | 1 | CWA |

| Pos | Part Number | Description | Remark | Qty | Model |
|---|---|---|---|---|---|
| (18) | 012 311 116 G | needle cage<br>5th gear<br>38 X 43 X 27 | | 1 | DVY/EFD/GDW |
| 19 | 012 311 361 DH | shifting gear<br>5th gear<br>Z = 30 : 38 | | 1 | CWA |
| (19) | 012 311 361 CR | shifting gear<br>5th gear<br>Z = 30 : 38 | | 1 | DVY |
| (19) | 012 311 361 DC | shifting gear<br>5th gear<br>Z = 31 : 37 | | 1 | EFD/GDW |
| 20 | 012 311 312 A | spring<br>5th gear<br>and<br>reverse gear<br>G >> 10 05 8 | | 2 | |
| (20) | 012 311 312 D | spring<br>5th gear<br>and<br>reverse gear<br>G 11 05 8 >> | | 2 | |
| 21 | 012 311 295 D | synchroniser ring<br>5th gear<br>G >> 10 05 8 | | 1 | |
| (21) | 012 311 295 F | synchroniser ring<br>5th gear<br>G 11 05 8 >> | | 1 | |
| 22 | N 902 945 01 | circlip<br>38 X 2 | | 1 | |
| 23A | 012 311 315 B | operating sleeve | | 1 | |
| 23B | 012 311 309 F | synchronising hub | | 1 | |
| 24 | N 902 944 01 | circlip<br>37 X 1,9 | | X | |
| (24) | N 902 944 02 | circlip<br>37 X 1,93 | | X | |
| (24) | N 902 944 03 | circlip<br>37 X 1,96 | | X | |
| (24) | N 902 944 04 | circlip<br>37 X 1,99 | | X | |
| (24) | N 902 944 05 | circlip<br>37 X 2,02 | | X | |
| (24) | N 902 944 06 | circlip<br>37 X 2,05 | | X | |
| 25 | 012 311 234 E | needle-roller bearing<br>37 X 42 X 24,5 | | 1 | |
| 26 | 012 311 295 D | synchroniser ring<br>reverse gear<br>G >> 10 05 8 | | 1 | |
| (26) | 012 311 295 F | synchroniser ring<br>reverse gear<br>G 11 05 8 >> | | 1 | |
| 27 | 012 311 217 K | shifting gear<br>reverse gear | | 1 | |
| 28 | 012 311 375 C | taper roller bearing<br>31,7 X 76,2 X 25,4 | | 1 | |
| 29 | 012 311 393 | adjusting shim<br>0,45 | | X | |
| (29) | 012 311 393 A | adjusting shim<br>0,49 | | X | |
| (29) | 012 311 393 B | adjusting shim<br>0,53 | | X | |
| (29) | 012 311 393 C | adjusting shim<br>0,57 | | X | |
| (29) | 012 311 393 D | adjusting shim<br>0,61 | | X | |
| (29) | 012 311 393 E | adjusting shim<br>0,65 | | X | |
| (29) | 012 311 393 F | adjusting shim<br>0,69 | | X | |
| (29) | 012 311 393 G | adjusting shim<br>0,73 | | X | |
| (29) | 012 311 393 H | adjusting shim<br>0,77 | | X | |
| (29) | 012 311 393 J | adjusting shim<br>0,81 | | X | |
| (29) | 012 311 393 K | adjusting shim<br>0,85 | | X | |
| (29) | 012 311 393 L | adjusting shim<br>0,89 | | X | |

| Pos | Part Number | Description | Remark | Qty | Model |
|---|---|---|---|---|---|
| (29) | 012 311 393 N | adjusting shim<br>0,97 | | X | |
| 30 | 012 301 251 B | pressure plate<br>70,98 X 14,8 | | X | |
| (30) | 012 301 251 C | pressure plate<br>70,98 X 15,3 | | X | |
| 31 | 012 301 193 | washer<br>71 X 7 | | 1 | |

| Pos | Part Number | Description | Remark | Qty | Model |
|---|---|---|---|---|---|

| Model | Year | MG | SG | Illustration | Restrictions | UPD | 18:13 | 30.07.2008 |
|---|---|---|---|---|---|---|---|---|
| 986 | 2004 | 3 | 03 | 303-06 | | 229 | | |

PORSCHE PET PORSCHE

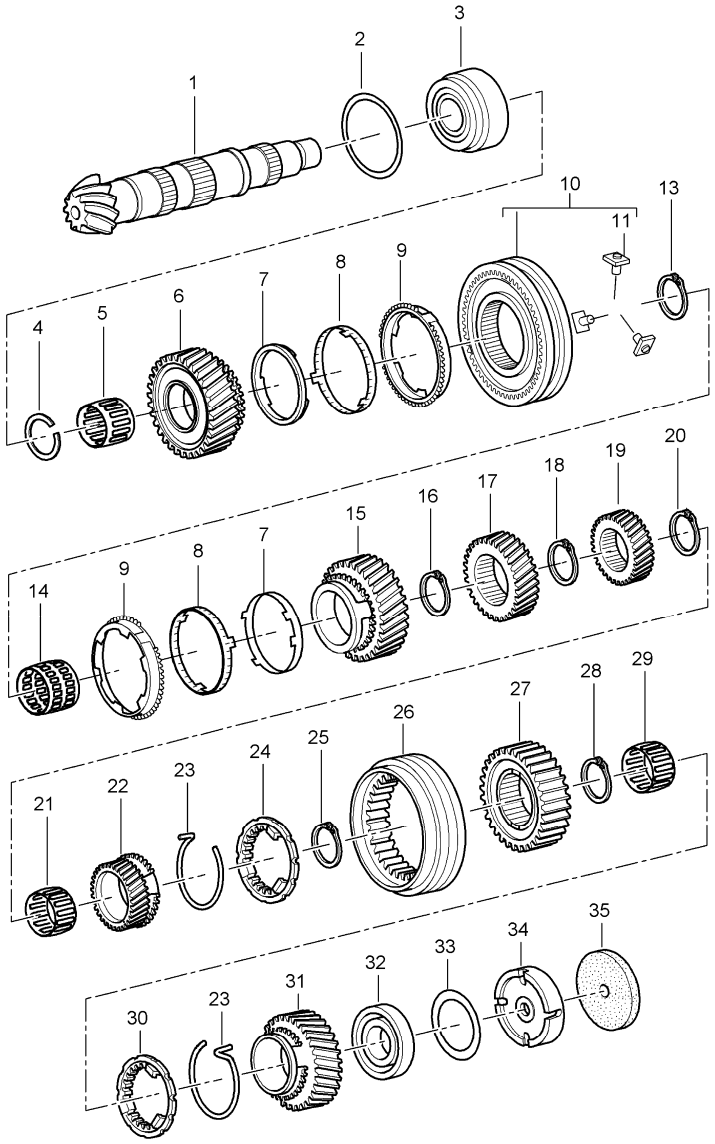


| Pos | Part Number | Description | Remark | Qty | Model |
|---|---|---|---|---|---|
| | | gears and shafts | | | G86.01<br>M481 |
| | | transmission<br>classification letter<br>attention | | | GFW |
| 1 | --- | output shaft | | 1 | |
| 2 | 012 311 391 | adjusting shim<br>0,4 | | X | |
| (2) | 012 311 391 A | adjusting shim<br>0,45 | | X | |
| (2) | 012 311 391 B | adjusting shim<br>0,5 | | X | |
| (2) | 012 311 391 C | adjusting shim<br>0,55 | | X | |
| (2) | 012 311 391 D | adjusting shim<br>0,6 | | X | |
| (2) | 012 311 391 E | adjusting shim<br>0,65 | | X | |
| (2) | 012 311 391 F | adjusting shim<br>0,7 | | X | |
| (2) | 012 311 391 G | adjusting shim<br>0,75 | | X | |
| 3 | 012 311 220 A | taper roller bearing<br>48,6 X 88 X 21,5 | | 1 | |
| 4 | N 908 600 01 | circlip<br>A 48,5 X 2,00 | | X | |
| (4) | N 908 600 07 | circlip<br>A 48,5 X 2,03 | | X | |
| (4) | N 908 600 08 | circlip<br>A 48,5 X 2,09 | | X | |
| (4) | N 908 600 09 | circlip<br>A 48,5 X 2,12 | | X | |
| (4) | N 908 600 10 | circlip<br>48,5 X 2,15 | | X | |
| 5 | 01X 311 325 A | needle cage<br>1st gear<br>48,5 X 52,5 X 26,4 | | 1 | |

| Pos | Part Number | Description | Remark | Qty | Model |
|---|---|---|---|---|---|
| 6 | 012 311 250 H | shifting gear<br>1st gear<br>Z = 35 : 10 | | 1 | |
| 7 | 01X 311 277 G | inner ring<br>1st gear | | 1 | |
| (7) | 01X 311 277 B | inner ring<br>2nd gear | | 1 | |
| 8 | 01X 311 259 G | intermediate ring<br>1st/2nd gear | | 2 | |
| 9 | 01X 311 247 N | synchroniser ring<br>1st/2nd gear | | 2 | |
| 10 | 01X 311 239 B | synchronising hub<br>with<br>operating sleeve<br>1st/2nd gear | | 1 | |
| 11 | 01X 311 314 B | pressure piece | | 3 | |
| 13 | N 902 947 01 | circlip<br>47 X 1,9 | | X | |
| (13) | N 902 947 02 | circlip<br>47 X 1,93 | | X | |
| (13) | N 902 947 03 | circlip<br>47 X 1,96 | | X | |
| (13) | N 902 947 04 | circlip<br>47 X 1,99 | | X | |
| (13) | N 902 947 05 | circlip<br>47 X 2,02 | | X | |
| 14 | 012 311 229 K | needle cage<br>2nd gear<br>47 X 52 X 26,6 | | 1 | |
| 15 | 012 311 260 H | shifting gear<br>2nd gear<br>Z = 36 : 17 | | 1 | |
| 16 | 012 311 317 | circlip<br>47 X 2,5 | | 1 | |
| 17 | 012 311 285 BT | gear wheel<br>3rd gear<br>Z = 40 : 28 | | 1 | |
| 18 | 01X 311 317 | circlip<br>44,5 x 1,9 | | X | |
| (18) | 01X 311 317 A | circlip<br>44,5 x 1,94 | | X | |
| (18) | 01X 311 317 B | circlip<br>44,5 x 1,98 | | X | |
| (18) | 01X 311 317 C | circlip<br>44,5 x 2,02 | | X | |
| (18) | 01X 311 317 D | circlip<br>44,5 x 2,06 | | X | |
| (18) | 01X 311 317 E | circlip<br>44,5 x 2,10 | | X | |
| 19 | 012 311 149 BT | gear wheel<br>4th speed<br>Z = 36 : 33 | | 1 | |
| 20 | N 902 945 01 | circlip<br>38 X 2 | | X | |
| (20) | N 902 945 02 | circlip<br>38 X 2,16 | | X | |
| (20) | N 902 945 03 | circlip<br>38 X 2,20 | | X | |
| (20) | N 902 945 04 | circlip<br>38 X 2,24 | | X | |
| (20) | N 902 945 05 | circlip<br>38 X 2,28 | | X | |
| 21 | 012 311 116 G | needle cage<br>5th gear<br>38 X 43 X 27 | | 1 | |
| 22 | 012 311 159 EJ | shifting gear<br>5th gear<br>Z = 31 : 37 | | 1 | |
| 23 | 01X 311 312 A | retaining spring | | 2 | |
| 24 | 01X 311 295 J | synchroniser ring<br>5th gear<br>and<br>reverse gear | | 1 | |
| 25 | N 902 945 01 | circlip<br>38 X 2 | | 1 | |
| 26 | 01X 311 315 | operating sleeve<br>5th gear<br>and<br>reverse gear | | 2 | |

| Pos | Part Number | Description | Remark | Qty | Model |
|---|---|---|---|---|---|
| 27 | 01X 311 309 | synchronising hub<br>5th gear<br>and<br>reverse gear | | 1 | |
| 28 | N 902 944 01 | circlip<br>37 X 1,9 | | X | |
| (28) | N 902 944 02 | circlip<br>37 X 1,93 | | X | |
| (28) | N 902 944 03 | circlip<br>37 X 1,96 | | X | |
| (28) | N 902 944 04 | circlip<br>37 X 1,99 | | X | |
| (28) | N 902 944 05 | circlip<br>37 X 2,02 | | X | |
| (28) | N 902 944 06 | circlip<br>37 X 2,05 | | X | |
| 29 | 012 311 234 E | needle-roller bearing<br>37 x 42 x 24,5 | | 1 | |
| 30 | 01X 311 295 J | synchroniser ring<br>reverse gear | | 1 | |
| 31 | 012 311 217 L | shifting gear<br>for<br>reverse gear | | 1 | |
| 32 | 012 311 375 C | taper roller bearing<br>31,7 x 76,2 x 25,4 | | 1 | |
| 33 | 012 311 393 | adjusting shim<br>0,45 | | X | |
| (33) | 012 311 393 A | adjusting shim<br>0,49 | | X | |
| (33) | 012 311 393 B | adjusting shim<br>0,53 | | X | |
| (33) | 012 311 393 C | adjusting shim<br>0,57 | | X | |
| (33) | 012 311 393 D | adjusting shim<br>0,61 | | X | |
| (33) | 012 311 393 E | adjusting shim<br>0,65 | | X | |
| (33) | 012 311 393 F | adjusting shim<br>0,69 | | X | |
| (33) | 012 311 393 G | adjusting shim<br>0,73 | | X | |
| (33) | 012 311 393 H | adjusting shim<br>0,77 | | X | |
| (33) | 012 311 393 J | adjusting shim<br>0,81 | | X | |
| (33) | 012 311 393 K | adjusting shim<br>0,85 | | X | |
| (33) | 012 311 393 L | adjusting shim<br>0,89 | | X | |
| 34 | 012 301 251 B | pressure plate<br>70,98 X 14,8 | | X | |
| (34) | 012 301 251 C | pressure plate<br>70,98 X 15,3 | | X | |
| 35 | 012 301 193 C | washer<br>71 X 7 | | 1 | |

| Model | Year | MG | SG | Illustration | Restrictions | UPD | 18:14 | 30.07.2008 |
|---|---|---|---|---|---|---|---|---|
| 986 | 2004 | 3 | 03 | 303-07 | | 229 | | |

PORSCHE PET PORSCHE

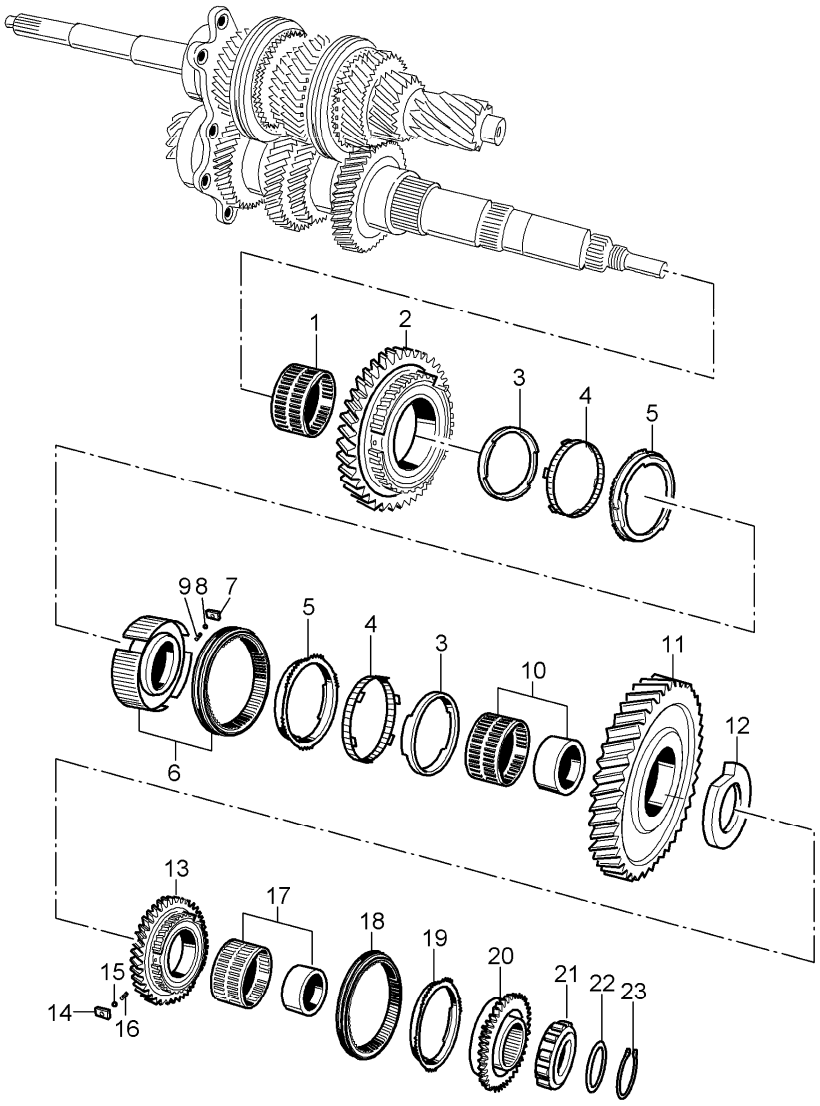


| Pos | Part Number | Description | Remark | Qty | Model |
|---|---|---|---|---|---|
| | | gears and shafts | | | G86.20 |
| 1 | 996 302 815 00 | needle-roller bearing<br>white | | 1 | |
| (1) | 996 302 815 01 | needle-roller bearing<br>blue | | 1 | |
| (1) | 996 302 815 02 | needle-roller bearing<br>green | | 1 | |
| (1) | 996 302 815 03 | needle-roller bearing<br>brown | | 1 | |
| 2 | 996 302 042 00 | loose gear wheel<br>2nd gear | | 1 | |
| 3 | 950 304 617 20 | ring | | 2 | |
| 4 | 996 304 613 20 | cone ring | | 2 | |
| 5 | 996 304 611 00 | synchroniser ring | | 2 | |
| 6 | 996 304 061 02 | guide sleeve<br>1st/2nd gear | | 1 | |
| 7 | 996 304 651 00 | stone | | 3 | |
| 8 | 900 108 058 00 | ball | | 3 | |
| 9 | 996 304 661 00 | compression spring | | 3 | |
| 10 | 996 302 816 00 | needle cage | | 1 | |
| 11 | 996 302 041 00 | loose gear wheel<br>1st gear | | 1 | |
| 12 | 996 302 281 00 | thrust washer<br>1st gear | | 1 | |
| 13 | 996 302 094 00 | loose gear wheel<br>reverse gear | | 1 | |
| 14 | 996 304 451 01 | stone | | 3 | |
| 15 | 900 108 058 00 | ball | | 3 | |
| 16 | 996 304 461 00 | compression spring | | 3 | |
| 17 | 996 302 816 00 | needle cage | | 1 | |
| 18 | 996 304 431 02 | shift sleeve | | 1 | |
| 19 | 996 304 411 00 | synchroniser ring | | 1 | |
| 20 | 996 304 401 00 | clutch hub<br>reverse gear wheel | | 1 | |

| Pos | Part Number | Description | Remark | Qty | Model |
|---|---|---|---|---|---|
| 21 | 996 301 806 00 | cylindrical-roller bearing<br>35 X 72 X 10 | | 1 | |
| 22 | 996 302 118 00 | shim<br>35 X 45 X 1,2 | | 1 | |
| (22) | 996 302 118 01 | shim<br>35 X 45 X 1,3 | | 1 | |
| (22) | 996 302 118 02 | shim<br>35 X 45 X 1,4 | | 1 | |
| (22) | 996 302 118 03 | shim<br>35 X 45 X 1,5 | | 1 | |
| (22) | 996 302 118 04 | shim<br>35 X 45 X 1,6 | | 1 | |
| (22) | 996 302 118 05 | shim<br>35 X 45 X 1,7 | | 1 | |
| (22) | 996 302 118 06 | shim<br>35 X 45 X 1,8 | | 1 | |
| (22) | 996 302 118 07 | shim<br>35 X 45 X 1,9 | | 1 | |
| (22) | 996 302 118 08 | shim<br>35 X 45 X 2,0 | | 1 | |
| (22) | 996 302 118 09 | shim<br>35 X 45 X 2,1 | | 1 | |
| (22) | 996 302 118 10 | shim<br>35 X 45 X 2,2 | | 1 | |
| (22) | 996 302 118 11 | shim<br>35 X 45 X 2,3 | | 1 | |
| (22) | 996 302 118 12 | shim<br>35 X 45 X 2,4 | | 1 | |
| (22) | 996 302 118 13 | shim<br>35 X 45 X 2,5 | | 1 | |
| 23 | 996 302 810 00 | circlip<br>35 X 2,25 | | 1 | |
| (23) | 996 302 810 01 | circlip<br>35 X 2,30 | | 1 | |
| (23) | 996 302 810 02 | circlip<br>35 X 2,35 | | 1 | |
| (23) | 996 302 810 03 | circlip<br>35 X 2,40 | | 1 | |
| (23) | 996 302 810 04 | circlip<br>35 X 2,45 | | 1 | |

| Model | Year | MG | SG | Illustration | Restrictions | UPD | 18:14 | 30.07.2008 | PET |
|---|---|---|---|---|---|---|---|---|---|
| 986 | 2004 | 3 | 03 | 303-08 | | 229 | | | |

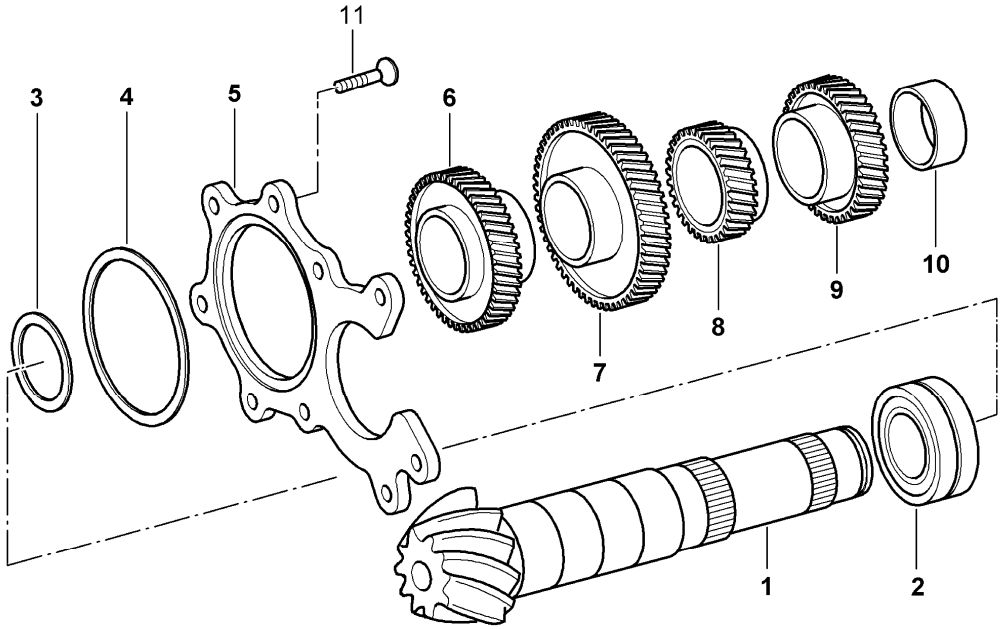


| Pos | Part Number | Description | Remark | Qty | Model |
|---|---|---|---|---|---|
| | | gears and shafts | | | G86.20 |
| 1 | --- | pinion shaft<br>see group<br>3/05/02 | | 1 | |
| 2 | 996 302 808 00 | bearing | | 1 | |
| 3 | 996 302 114 00 | shim<br>48 X 60 X 0,50 | | 1 | |
| (3) | 996 302 114 01 | shim<br>48 X 60 X 0,55 | | 1 | |
| (3) | 996 302 114 02 | shim<br>48 X 60 X 0,60 | | 1 | |
| (3) | 996 302 114 03 | shim<br>48 X 60 X 0,65 | | 1 | |
| (3) | 996 302 114 04 | shim<br>48 X 60 X 0,70 | | 1 | |
| (3) | 996 302 114 05 | shim<br>48 X 60 X 0,75 | | 1 | |
| (3) | 996 302 114 06 | shim<br>48 X 60 X 0,80 | | 1 | |
| (3) | 996 302 114 07 | shim<br>48 X 60 X 0,85 | | 1 | |
| (3) | 996 302 114 08 | shim<br>48 X 60 X 0,90 | | 1 | |
| (3) | 996 302 114 09 | shim<br>48 X 60 X 0,95 | | 1 | |
| 4 | 996 302 122 00 | shim<br>85,5 X 93 X 0,50 | | 1 | |
| (4) | 996 302 122 01 | shim<br>85,5 X 93 X 0,55 | | 1 | |
| (4) | 996 302 122 02 | shim<br>85,5 X 93 X 0,60 | | 1 | |
| (4) | 996 302 122 03 | shim<br>85,5 X 93 X 0,65 | | 1 | |
| (4) | 996 302 122 04 | shim<br>85,5 X 93 X 0,70 | | 1 | |
| (4) | 996 302 122 05 | shim<br>85,5 X 93 X 0,75 | | 1 | |

| Pos | Part Number | Description | Remark | Qty | Model |
|---|---|---|---|---|---|
| (4) | 996 302 122 06 | shim<br>85,5 X 93 X 0,80 | | 1 | |
| (4) | 996 302 122 07 | shim<br>85,5 X 93 X 0,85 | | 1 | |
| (4) | 996 302 122 08 | shim<br>85,5 X 93 X 0,90 | | 1 | |
| (4) | 996 302 122 09 | shim<br>85,5 X 93 X 0,95 | | 1 | |
| (4) | 996 302 122 10 | shim<br>85,5 X 93 X 1,00 | | 1 | |
| (4) | 996 302 122 11 | shim<br>85,5 X 93 X 1,05 | | 1 | |
| (4) | 996 302 122 12 | shim<br>85,5 X 93 X 1,10 | | X | |
| (4) | 996 302 122 13 | shim<br>85,5 X 93 X 1,15 | | X | |
| (4) | 996 302 122 14 | shim<br>85,5 X 93 X 1,20 | | X | |
| (4) | 996 302 122 15 | shim<br>85,5 X 93 X 1,25 | | 1 | |
| (4) | 996 302 122 16 | shim<br>85,5 X 93 X 1,30 | | 1 | |
| (4) | 996 302 122 17 | shim<br>85,5 X 93 X 1,35 | | 1 | |
| (4) | 996 302 122 18 | shim<br>85,5 X 93 X 1,40 | | 1 | |
| (4) | 996 302 122 19 | shim<br>85,5 X 93 X 1,45 | | 1 | |
| (4) | 996 302 122 20 | shim<br>85,5 X 93 X 1,50 | | 1 | |
| (4) | 996 302 122 21 | shim<br>85,5 X 93 X 1,55 | | 1 | |
| (4) | 996 302 122 22 | shim<br>85,5 X 93 X 1,60 | | 1 | |
| 5 | 986 302 121 00 | retainer plate | | 1 | |
| 6 | 996 302 214 00 | fixed gear wheel<br>4th speed | | 1 | |
| 7 | 996 302 213 00 | fixed gear wheel<br>3rd gear | | 1 | |
| 8 | 996 302 216 15 | fixed gear wheel<br>6th gear | | 1 | |
| 9 | 996 302 215 00 | fixed gear wheel<br>5th gear | | 1 | |
| 10 | 996 302 272 00 | inner ring | | 1 | |
| 11 | 996 302 817 00 | countersunk-head screw<br>mount<br>retainer plate | | 9 | |

| Model | Year | MG | SG | Illustration | Restrictions | UPD | 18:14 | 30.07.2008 | PORSCHE PET PORSCHE |
|---|---|---|---|---|---|---|---|---|---|
| 986 | 2004 | 3 | 04 | 304-00 | | 229 | | | |

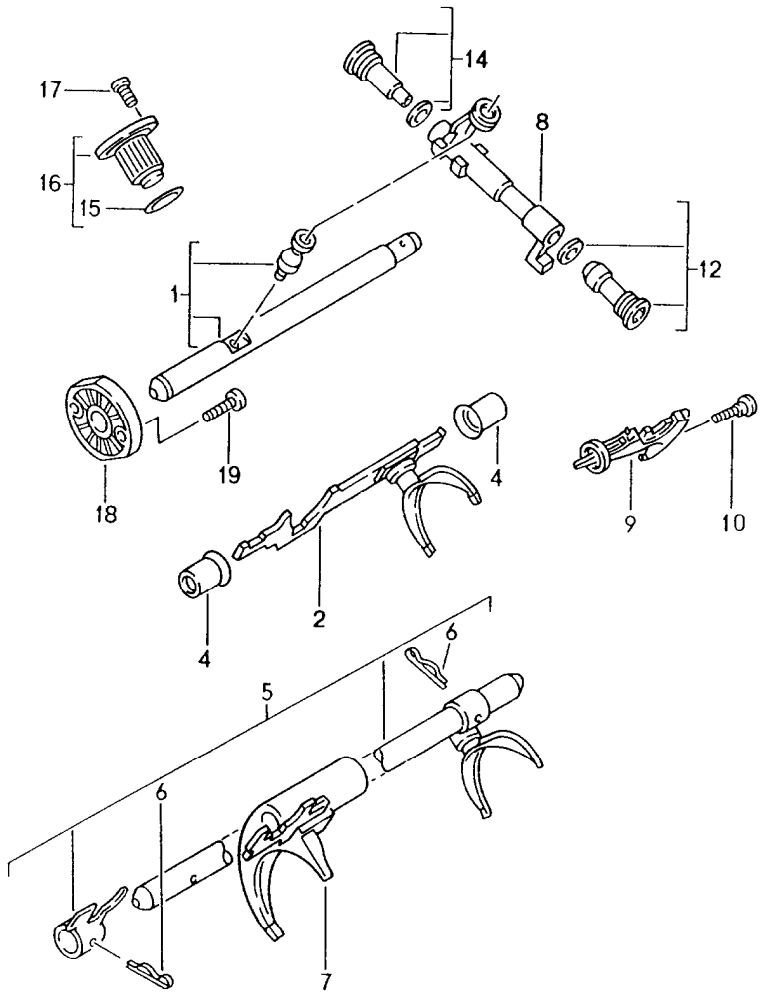


| Pos | Part Number | Description | Remark | Qty | Model |
|---|---|---|---|---|---|
| | | manual transmission | -99<br>00- | | G86.00<br>G86.01 |
| | | shift rods<br>shift forks | | | |
| 1 | 012 311 505 | shift rod | | 1 | |
| 2 | 012 311 559 D | gear shift rod<br>3rd/4th gear | | 1 | |
| 4 | 012 301 120 C | sleeve | | 2 | |
| 5 | 012 311 575 D | gear shift rod<br>5th gear<br>and<br>reverse gear | | 1 | |
| 6 | N 023 332 1 | tensioning sleeve<br>6 X 24 | | 2 | |
| 7 | 012 311 549 | shift fork<br>1st/2nd gear | | 1 | |
| 8 | 012 311 617 D | reverse lever | -99 | 1 | |
| (8) | 012 311 617 E | reverse lever | 00- | 1 | |
| 9 | 012 311 628 A | locking segment | | 1 | CWA/DVY/EFD/<br>GDW |
| (9) | 012 311 741 | locking segment | | 1 | GFW |
| 10 | 012 301 291 | torx screw<br>M 8 X 30 | | 1 | |
| 12 | 012 311 718 A | stop screw<br>M 22 X 1,5 | -99 | 1 | |
| (12) | 012 311 718 D | stop screw<br>M 22 X 1,5 | 00- | 1 | |
| 14 | 012 311 720 A | stop screw<br>M 26 X 1,5 | -99 | 1 | |
| (14) | 012 311 720 D | stop screw<br>M 26 X 1,5 | 00- | 1 | |
| 15 | N 903 541 01 | o-ring<br>22 X 2 | | 1 | |
| 16 | 012 311 691 A | pawl | | 1 | |
| 17 | N 903 663 03 | pan-head screw<br>M 8 X 22 | | 2 | |

| Pos | Part Number | Description | Remark | Qty | Model |
|---|---|---|---|---|---|
| 18 | 012 301 453 G | lid<br>for<br>shift rod | | 1 | CWA/DVY/EFD |
| (18) | 012 301 451 | lid<br>for<br>shift rod | | 1 | GDW/GFW/GAL |
| 19 | N 903 660 01 | torx screw<br>M 8 X 36 | | 2 | |

| Pos | Part Number | Description | Remark | Qty | Model |
|---|---|---|---|---|---|

| Model | Year | MG | SG | Illustration | Restrictions | UPD | 18:14 | 30.07.2008 | PET |
|---|---|---|---|---|---|---|---|---|---|
| 986 | 2004 | 3 | 04 | 304-05 | | 229 | | | |

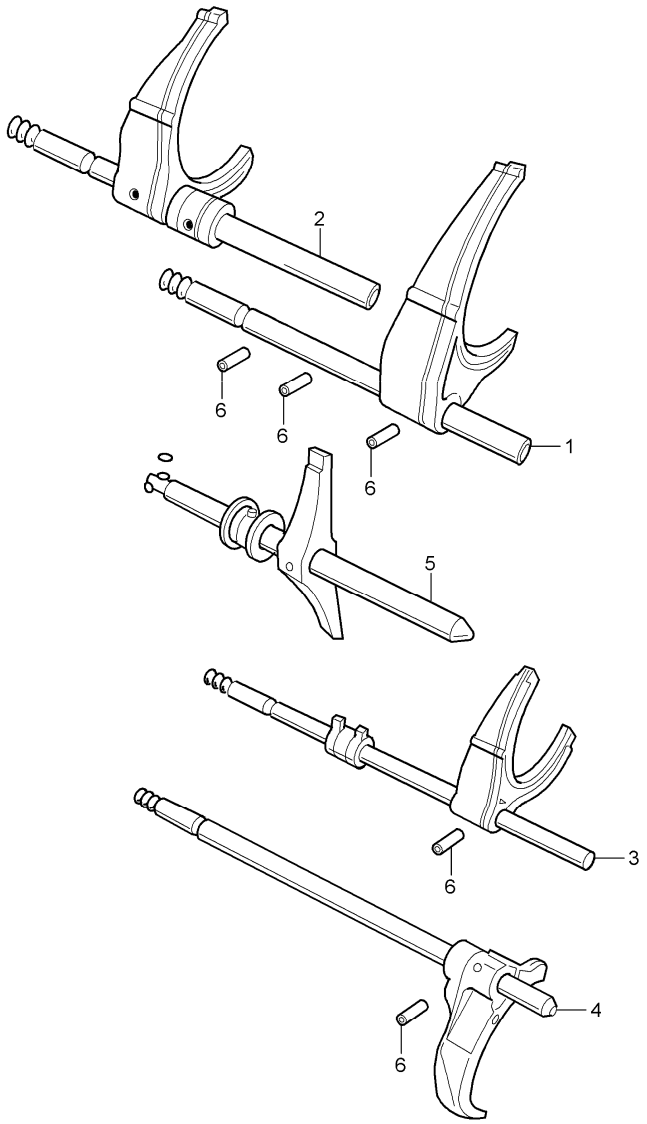


| Pos | Part Number | Description | Remark | Qty | Model |
|---|---|---|---|---|---|
| | | gear shift rod<br>shift fork | | | G86.20 |
| 1 | 986 303 015 00 | gear shift rod<br>5./6. Gang | | 1 | |
| 2 | 986 303 013 00 | gear shift rod<br>3./4. Gang | | 1 | |
| 3 | 986 303 010 00 | gear shift rod<br>1st/2nd gear | | 1 | |
| 4 | 986 303 016 00 | gear shift rod<br>reverse gear | | 1 | |
| 5 | 986 303 021 00 | shift rod | | 1 | |
| 6 | 996 303 301 00 | spiral clamping pin | | 5 | |

| Model | Year | MG | SG | Illustration | Restrictions | UPD | 18:14 | 30.07.2008 | PORSCHE PET PORSCHE |
|---|---|---|---|---|---|---|---|---|---|
| 986 | 2004 | 3 | 05 | 305-00 | | 229 | | | |

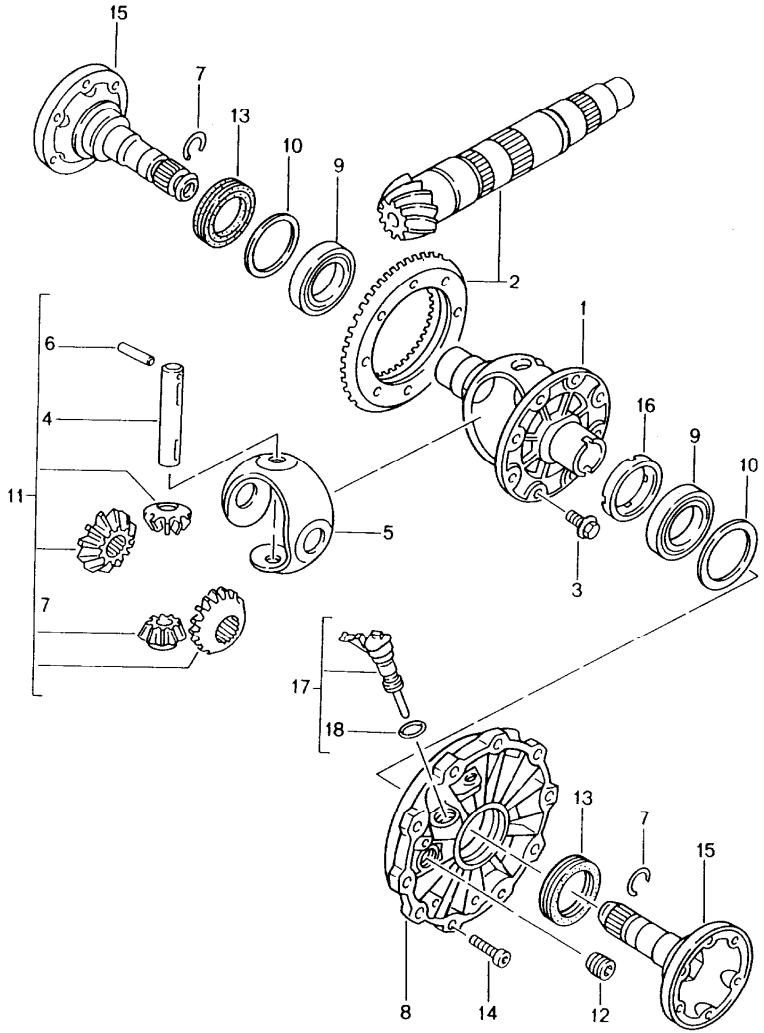


| Pos | Part Number | Description | Remark | Qty | Model |
|---|---|---|---|---|---|
| | | differential | -99<br>00- | | G86.00<br>G86.01 |
| | | transmission<br>classification letter<br>attention | | | CWA/DVY/EFD/<br>GDW/GFW |
| 1 | 012 409 121 M | differential housing<br>90 MM | | 1 | CWA |
| (1) | 012 409 121 M | differential housing<br>90 MM<br>G >> 10 01 9 | | 1 | DVY |
| (1) | 012 409 121 L | differential housing<br>90 MM<br>G 11 01 9 >> | | 1 | DVY/EFD/GDW |
| (1) | 01X 409 121 A | differential housing<br>90 MM | | 1 | GFW |
| 2 | 012 409 143 AR | ring gear and pinion shaft<br>35 : 9 | | 1 | CWA |
| 2 | 012 409 143 CA | ring gear and pinion shaft<br>35 : 9 | | 1 | DVY |
| 2 | 012 409 143 CQ | ring gear and pinion shaft<br>32 : 9 | | 1 | EFD/GDW |
| (2) | 012 409 143 EJ | ring gear and pinion shaft<br>32 : 9 | | 1 | GFW |
| 3 | N 903 614 01 | hexagon-head bolt<br>M 10 X 1 X 22,8 | | 10 | |
| 4 | 005 409 177 00 | differential bolt | | 1 | |
| 5 | 012 409 170 A | thrust washer | | 1 | CWA/DVY/EFD |
| (5) | 02B 409 170 A | thrust washer | | 1 | GDW/GFW |
| 6 | N 100 726 01 | roll pin<br>5 X 36 | | 1 | |
| 7 | 012 409 413 | circlip | | 2 | |
| 8 | 012 409 131 H | lid | | 1 | CWA |
| 8 | 012 409 131 H | lid<br>G >> 10 01 9 | | 1 | DVY |
| (8) | 012 409 131 L | lid<br>G 11 01 9 >> | | 1 | DVY/EFD/GDW |
| (8) | 012 409 131 L | lid | | 1 | GFW |

| Pos | Part Number | Description | Remark | Qty | Model |
|---|---|---|---|---|---|
| 9 | 002 517 185 | taper roller bearing<br>46 X 75 X 18 | | 2 | CWA |
| 9 | 002 517 185 A | taper roller bearing<br>46 X 75 X 18<br>G >> 10 01 9 | | 2 | DVY |
| 9 | 002 517 185 A | taper roller bearing<br>right<br>46 X 75 X 18<br>G 11 01 9 >> | | 1 | DVY/EFD/GDW |
| 9 | 002 517 185 A | taper roller bearing<br>right<br>46 X 75 X 18 | | 1 | GFW |
| 9 | 012 409 123 | taper roller bearing<br>left<br>50 X 80 X 20<br>G 11 01 9 >> | | 1 | DVY/EFD/GDW |
| 9 | 01X 409 123 | taper roller bearing<br>left<br>50 X 80 X 20 | | 1 | GFW |
| 10 | 012 409 387 | shim<br>0,45 | | X | CWA |
| 10 | 012 409 387 | shim<br>0,45<br>G >> 10 01 9 | | X | DVY |
| 10 | 012 409 387 DM | shim<br>left<br>0,45<br>G 11 01 9 >> | | X | DVY/EFD/GDW/<br>GFW |
| 10 | 012 409 387 AK | shim<br>right<br>0,45<br>G 11 01 9 >> | | X | DVY/EFD/GDW/<br>GFW |
| (10) | 012 409 387 A | shim<br>0,50 | | X | CWA |
| (10) | 012 409 387 A | shim<br>0,50<br>G >> 10 01 9 | | X | DVY |
| (10) | 012 409 387 DN | shim<br>left<br>0,49<br>G 11 01 9 >> | | X | DVY/EFD/GDW/<br>GFW |
| (10) | 012 409 387 AL | shim<br>right<br>0,49<br>G 11 01 9 >> | | X | DVY/EFD/GDW/<br>GFW |
| (10) | 012 409 387 B | shim<br>0,55 | | X | CWA |
| (10) | 012 409 387 B | shim<br>0,55<br>G >> 10 01 9 | | X | DVY |
| (10) | 012 409 387 DP | shim<br>left<br>0,53<br>G 11 01 9 >> | | X | DVY/EFD/GDW/<br>GFW |
| (10) | 012 409 387 AM | shim<br>right<br>0,53<br>G 11 01 9 >> | | X | DVY/EFD/GDW/<br>GFW |
| (10) | 012 409 387 C | shim<br>0,60 | | X | CWA |
| (10) | 012 409 387 C | shim<br>0,60<br>G >> 10 01 9 | | X | DVY |
| (10) | 012 409 387 DQ | shim<br>left<br>0,57<br>G 11 01 9 >> | | X | DVY/EFD/GDW/<br>GFW |
| (10) | 012 409 387 AN | shim<br>right<br>0,57<br>G 11 01 9 >> | | X | DVY/EFD/GDW/<br>GFW |
| (10) | 012 409 387 D | shim<br>0,65 | | X | CWA |
| (10) | 012 409 387 D | shim<br>0,65<br>G >> 10 01 9 | | X | DVY |
| (10) | 012 409 387 DR | shim<br>left<br>0,61<br>G 11 01 9 >> | | X | DVY/EFD/GDW/<br>GFW |
| (10) | 012 409 387 AP | shim<br>right<br>0,61<br>G 11 01 9 >> | | X | DVY/EFD/GDW/<br>GFW |

| Pos | Part Number | Description | Remark | Qty | Model |
|---|---|---|---|---|---|
| (10) | 012 409 387 E | shim<br>0,70 | | X | CWA |
| (10) | 012 409 387 E | shim<br>0,70<br>G >> 10 01 9 | | X | DVY |
| (10) | 012 409 387 DS | shim<br>left<br>0,65<br>G 11 01 9 >> | | X | DVY/EFD/GDW/<br>GFW |
| (10) | 012 409 387 AQ | shim<br>right<br>0,65<br>G 11 01 9 >> | | X | DVY/EFD/GDW/<br>GFW |
| (10) | 012 409 387 F | shim<br>0,75 | | X | CWA |
| (10) | 012 409 387 F | shim<br>0,75<br>G >> 10 01 9 | | X | DVY |
| (10) | 012 409 387 DT | shim<br>left<br>0,69<br>G 11 01 9 >> | | X | DVY/EFD/GDW/<br>GFW |
| (10) | 012 409 387 AR | shim<br>right<br>0,69<br>G 11 01 9 >> | | X | DVY/EFD/GDW/<br>GFW |
| (10) | 012 409 387 G | shim<br>0,80 | | X | CWA |
| (10) | 012 409 387 G | shim<br>0,80<br>G >> 10 01 9 | | X | DVY |
| (10) | 012 409 387 EA | shim<br>left<br>0,73<br>G 11 01 9 >> | | X | DVY/EFD/GDW/<br>GFW |
| (10) | 012 409 387 AS | shim<br>right<br>0,73<br>G 11 01 9 >> | | X | DVY/EFD/GDW/<br>GFW |
| (10) | 012 409 387 H | shim<br>0,85 | | X | CWA |
| (10) | 012 409 387 H | shim<br>0,85<br>G >> 10 01 9 | | X | DVY |
| (10) | 012 409 387 EB | shim<br>left<br>0,77<br>G 11 01 9 >> | | X | DVY/EFD/GDW/<br>GFW |
| (10) | 012 409 387 AT | shim<br>right<br>0,77<br>G 11 01 9 >> | | X | DVY/EFD/GDW/<br>GFW |
| (10) | 012 409 387 J | shim<br>0,90 | | X | CWA |
| (10) | 012 409 387 J | shim<br>0,90<br>G >> 10 01 9 | | X | DVY |
| (10) | 012 409 387 EC | shim<br>left<br>0,81<br>G 11 01 9 >> | | X | DVY/EFD/GDW/<br>GFW |
| (10) | 012 409 387 BA | shim<br>right<br>0,81<br>G 11 01 9 >> | | X | DVY/EFD/GDW/<br>GFW |
| (10) | 012 409 387 ED | shim<br>left<br>0,85<br>G 11 01 9 >> | | X | DVY/EFD/GDW/<br>GFW |
| (10) | 012 409 387 BB | shim<br>right<br>0,85<br>G 11 01 9 >> | | X | DVY/EFD/GDW/<br>GFW |
| 11 | 02M 498 081 A | differential pinions<br>1 set | | 1 | CWA/DVY/EFD/<br>GDW |
| (11) | 01X 498 081 | differential pinions<br>1 set | | 1 | GFW |
| 12 | 111 301 127 E | screw plug<br>M 24 X 1,5 | -02 | 1 | |
| (12) | WHT 001 937 | screw plug<br>M 24 X 1,5 | 03- | 1 | |
| 13 | 016 409 399 B | radial shaft seal<br>45 X 60 X 8 | | 2 | |
| 14 | N 903 660 01 | torx screw<br>M 8 X 36 | | 10 | |

| Pos | Part Number | Description | Remark | Qty | Model |
|---|---|---|---|---|---|
| 15 | 012 409 343 K | flanged shaft<br>F >>983S6 00191<br>F >>983U6 03154 | | 2 | CWA/DVY/EFD |
| (15) | 012 409 343 AA | flanged shaft<br>F 983S6 00192>><br>F 983U6 03155>> | | 2 | CWA/DVY/EFD |
| (15) | 012 409 343 AC | flanged shaft | | 2 | GDW/GFW |
| 16 | 012 409 182 B | drive wheel<br>without<br>function-drive | -02 | 1 | |
| (16) | 012 409 182 C | drive wheel<br>without<br>function-drive | 03- | 1 | |
| 17 | 012 409 191 C | sensor<br>without<br>function-drive | -99 | 1 | |
| (17) | 012 409 191 D | sensor<br>without<br>function-drive<br>G >> 28 06 | 00- | 1 | |
| (17) | 012 409 961 | stopper<br>G 01 07 2 >> | | 1 | |
| 18 | N 903 684 01 | round seal<br>14,5 X 2 | | 1 | |

| Pos | Part Number | Description | Remark | Qty | Model |
|---|---|---|---|---|---|

| Model | Year | MG | SG | Illustration | Restrictions | UPD | 18:15 | 30.07.2008 |
|---|---|---|---|---|---|---|---|---|
| 986 | 2004 | 3 | 05 | 305-01 | | 229 | | |

PORSCHE PET PORSCHE

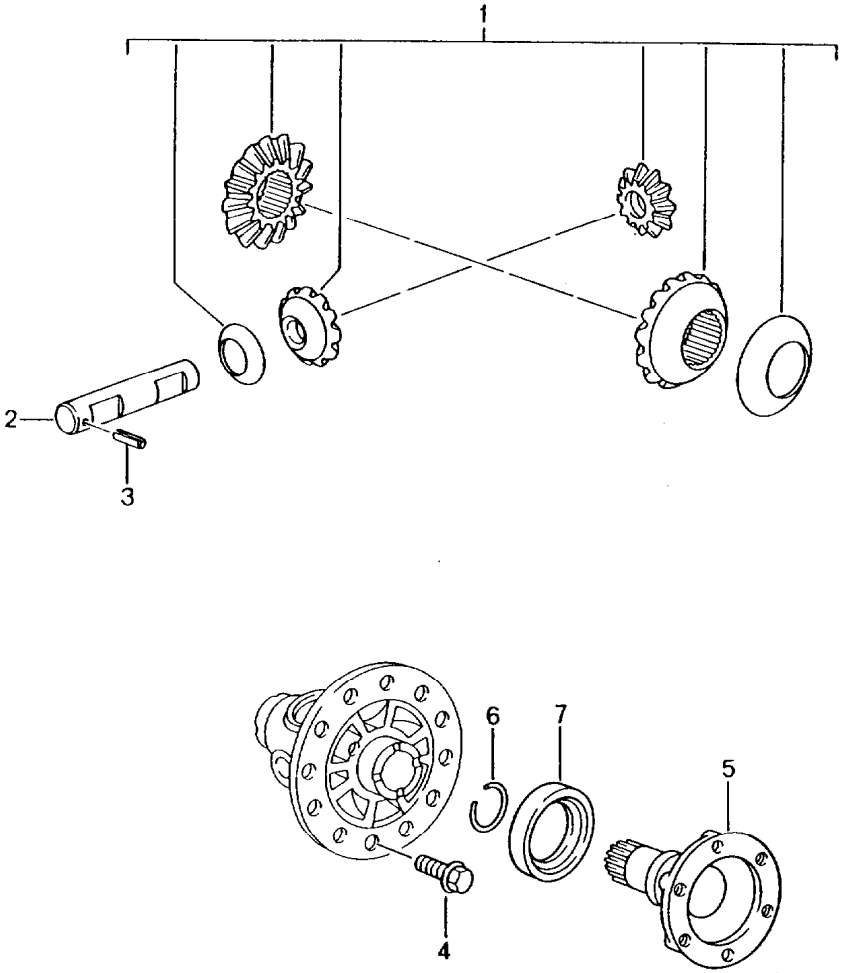


| Pos | Part Number | Description | Remark | Qty | Model |
|---|---|---|---|---|---|
| | | differential | 00- | | G86.20 |
| 1 | 996 332 922 00 | differential pinions<br>1 set | | 1 | |
| 2 | 996 332 205 00 | differential bolt | | 1 | |
| 3 | 900 309 038 01 | pin<br>5 X 16 | | 1 | |
| 4 | 996 332 276 00 | hexagon-head bolt<br>M 12 X 1,25 X 22,5 | | 12 | |
| 5 | 996 332 209 00 | joint flange | | 2 | |
| 6 | 996 332 249 00 | circlip<br>35 X 2,5 | | 2 | |
| 7 | 999 113 347 40 | shaft sealing ring<br>48 X 68 X 10 | | 2 | |

| Model | Year | MG | SG | Illustration | Restrictions | UPD | 18:15 | 30.07.2008 | PET |
|---|---|---|---|---|---|---|---|---|---|
| 986 | 2004 | 3 | 05 | 305-02 | | 229 | | | |

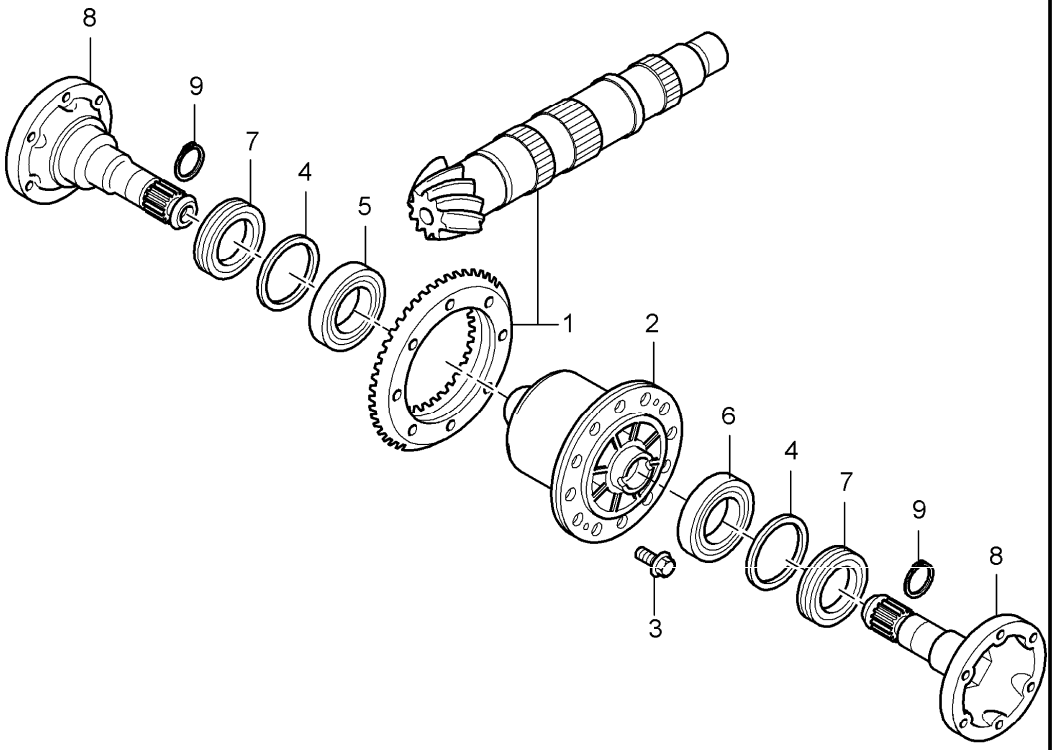


| Pos | Part Number | Description | Remark | Qty | Model |
|---|---|---|---|---|---|
| | | differential<br>rear axle | | | G86.20 |
| 1 | 996 302 911 00 | gear set | | 1 | |
| 2 | 996 332 005 00 | differential | | 1 | |
| 3 | 999 217 152 01 | hexagon-head bolt<br>M 12 X 1,25 | | 12 | |
| 4 | 996 332 266 50 | adjusting ring<br>1,50 MM | | 2 | |
| (4) | 996 332 266 51 | adjusting ring<br>1,55 MM | | 2 | |
| (4) | 996 332 266 52 | adjusting ring<br>1,60 MM | | 2 | |
| (4) | 996 332 266 53 | adjusting ring<br>1,65 MM | | 2 | |
| (4) | 996 332 266 54 | adjusting ring<br>1,70 MM | | 2 | |
| (4) | 996 332 266 55 | adjusting ring<br>1,75 MM | | 2 | |
| (4) | 996 332 266 56 | adjusting ring<br>1,80 MM | | 2 | |
| (4) | 996 332 266 57 | adjusting ring<br>1,85 MM | | 2 | |
| (4) | 996 332 266 58 | adjusting ring<br>1,90 MM | | 2 | |
| (4) | 996 332 266 59 | adjusting ring<br>1,95 MM | | 2 | |
| (4) | 996 332 266 60 | adjusting ring<br>2,00 MM | | 2 | |
| (4) | 996 332 266 61 | adjusting ring<br>2,05 MM | | 2 | |
| (4) | 996 332 266 62 | adjusting ring<br>2,10 MM | | 2 | |
| (4) | 996 332 266 63 | adjusting ring<br>2,15 MM | | 2 | |
| (4) | 996 332 266 64 | adjusting ring<br>2,20 MM | | 2 | |
| (4) | 996 332 266 65 | adjusting ring<br>2,25 MM | | 2 | |

| Pos | Part Number | Description | Remark | Qty | Model |
|---|---|---|---|---|---|
| (4) | 996 332 266 66 | adjusting ring<br>2,30 MM | | 2 | |
| (4) | 996 332 266 67 | adjusting ring<br>2,35 MM | | 2 | |
| (4) | 996 332 266 68 | adjusting ring<br>2,40 MM | | 2 | |
| (4) | 996 332 266 69 | adjusting ring<br>2,45 MM | | 2 | |
| (4) | 996 332 266 70 | adjusting ring<br>2,50 MM | | 2 | |
| (4) | 996 332 266 71 | adjusting ring<br>2,55 MM | | 2 | |
| (4) | 996 332 266 72 | adjusting ring<br>2,60 MM | | 2 | |
| (4) | 996 332 266 73 | adjusting ring<br>2,65 MM | | 2 | |
| (4) | 996 332 266 74 | adjusting ring<br>2,70 MM | | 2 | |
| (4) | 996 332 266 75 | adjusting ring<br>2,75 MM | | 2 | |
| (4) | 996 332 266 76 | adjusting ring<br>2,80 MM | | 2 | |
| 5 | 999 059 066 02 | taper roller bearing | | 1 | |
| 6 | 999 059 064 00 | taper roller bearing | | 1 | |
| 7 | 999 113 356 40 | shaft sealing ring<br>AS 48 X 68 X 10 | | 2 | |
| 8 | 996 332 209 00 | joint flange | | 2 | |
| 9 | 996 332 249 00 | circlip<br>35 X 2,5 | | 2 | |

| Model | Year | MG | SG | Illustration | Restrictions | UPD | 18:15 | 30.07.2008 | PET |
|---|---|---|---|---|---|---|---|---|---|
| 986 | 2004 | 3 | 06 | 306-00 | | 229 | | | |

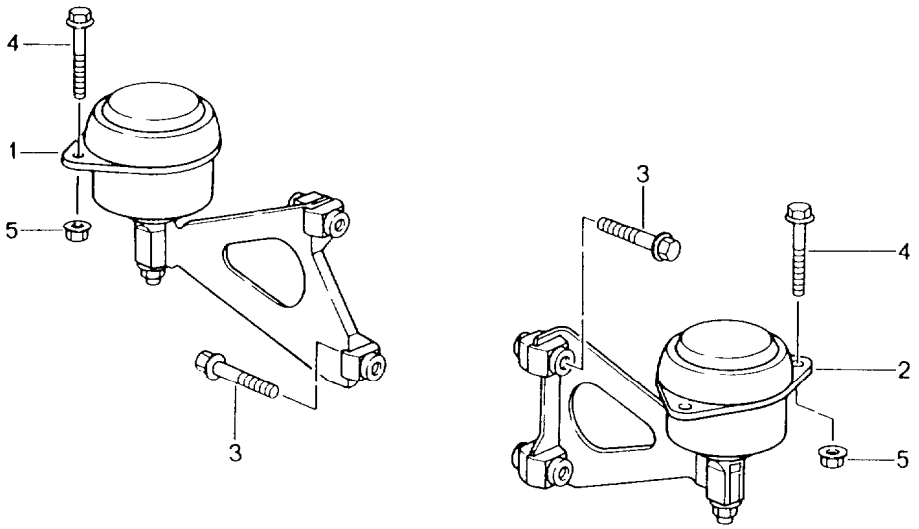


| Pos | Part Number | Description | Remark | Qty | Model |
|---|---|---|---|---|---|
| | | manual transmission | -99<br>00- | | G86.00<br>G86.01 |
| | | transmission suspension<br>threaded joint<br>engine | | | |
| 1 | 986 375 084 03 | transmission bracket<br>right | | 1 | |
| 2 | 986 375 083 03 | transmission bracket<br>left | | 1 | |
| 3 | 900 378 098 09 | hexagon-head bolt<br>M 10 X 60 | | 4 | |
| 4 | 900 378 056 02 | hexagon-head bolt<br>M 8 X 60 | | 4 | |
| 5 | 999 084 447 09 | hexagon nut<br>M 8 | | 4 | |
| 6 | 999 072 008 09 | hexagon-head bolt<br>M 12 X 1,5 X 70 | | 1 | |
| 7 | 999 072 009 09 | hexagon-head bolt<br>M 12 X 1,5 X 90 | | 3 | |
| 8 | 999 218 088 09 | stud<br>M 10 X 30 | | 1 | |
| 9 | 900 377 011 09 | hexagon nut<br>M 10 | | 1 | |
| 10 | 999 073 118 09 | pan-head screw<br>M 10 X 40 | | 1 | |
| 11 | N 905 028 02 | washer<br>15 X 28 X 3,5 | | 1 | |
| 12 | 999 072 010 09 | hexagon-head bolt<br>M 12 X 1,5 X 100 | | 1 | |

| Model | Year | MG | SG | Illustration | Restrictions | UPD | 18:15 | 30.07.2008 | PET |
|---|---|---|---|---|---|---|---|---|---|
| 986 | 2004 | 3 | 06 | 306-01 | | 229 | | | |

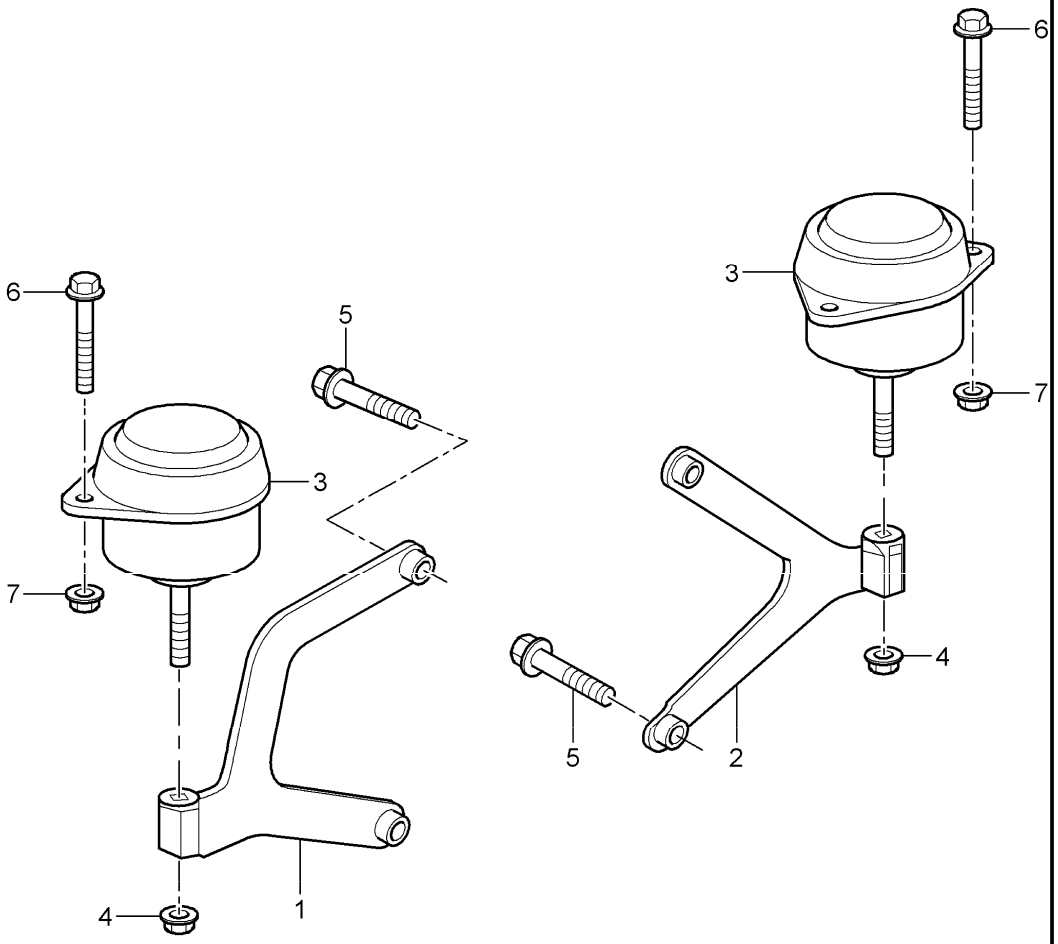


| Pos | Part Number | Description | Remark | Qty | Model |
|---|---|---|---|---|---|
| | | manual transmission<br>transmission suspension<br>threaded joint<br>engine | 00- | | G86.20 |
| 1 | 986 375 166 03 | bracket<br>right | | 1 | |
| 2 | 986 375 165 03 | bracket<br>left | | 1 | |
| 3 | 986 375 049 01 | bearing | | 2 | |
| 4 | 999 086 009 09 | nut<br>M 12 X 1,5 | | 2 | |
| 5 | A 900 378 092 09 | hexagon-head bolt<br>M 12 X 1,5 X 40 | | 4 | |
| 6 | 900 378 159 09 | hexagon-head bolt<br>M 8 X 60 | | 4 | |
| 7 | 900 380 005 09 | hexagon nut<br>M 8 | | 4 | |

| Model | Year | MG | SG | Illustration | Restrictions | UPD | 18:15 | 30.07.2008 |
|---|---|---|---|---|---|---|---|---|
| 986 | 2004 | 3 | 20 | 320-00 | | 229 | | |

PORSCHE PET PORSCHE

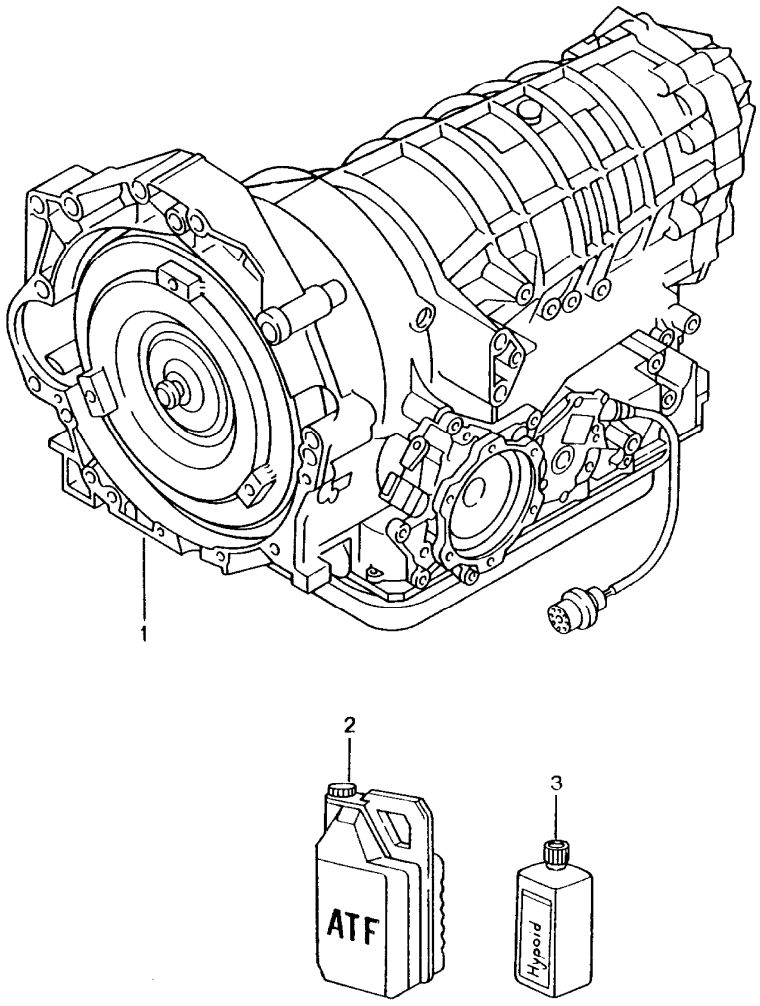


| Pos | Part Number | Description | Remark | Qty | Model |
|---|---|---|---|---|---|
| | | tiptronic | -99<br>00-<br>00- | | A86.00<br>A86.05<br>A86.20 |
| | | see technical information<br>group<br>3<br>NR. 2 / 2A /98 | | | |
| | | replacement transmission<br>not<br>ready for installation | | | |
| 1 | A 986 300 911 01 | transmission | -97 | 1 | A86.00 |
| (1) | A 986 300 011 02 | transmission | 98 | 1 | A86.00 |
| (1) | 986 300 011 03 | transmission<br>F >>98XS6 00783<br>use also:<br>control unit<br>986.618.225.04 | 99 | 1 | A86.00 |
| (1) | 986 300 011 05 | transmission | | 1 | A86.05 |
| (1) | 986 300 011 20 | transmission | | 1 | A86.20 |
| 2 | 000 043 205 09 | transmission oil<br>ATF<br>20 LTR.<br>container | | X | |
| 3 | 999 917 546 00 | transmission oil<br>HYPOID<br>1 LTR.<br>container | | X | |

| Model | Year | MG | SG | Illustration | Restrictions | UPD | 18:16 | 30.07.2008 | PET |
|---|---|---|---|---|---|---|---|---|---|
| 986 | 2004 | 3 | 20 | 320-03 | | 229 | | | |

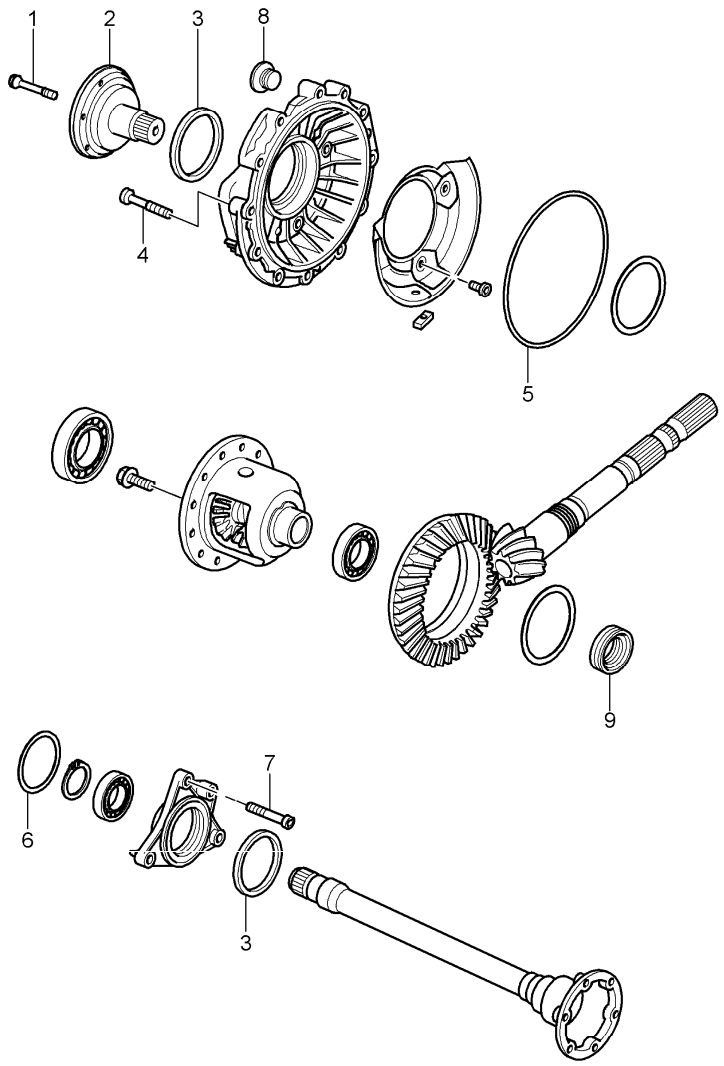


| Pos | Part Number | Description | Remark | Qty | Model |
|---|---|---|---|---|---|
| | | tiptronic | -99<br>00-<br>00- | | A86.00<br>A86.05<br>A86.20 |
| | | differential<br>differential housing | | | |
| 1 | 944 332 587 00 | elastic bolt<br>M 8 | | 1 | |
| 2 | 986 332 201 00 | drive flange | | 1 | |
| 2 | 986 332 201 20 | drive flange | | 1 | A86.20 |
| 3 | 986 397 027 00 | shaft sealing ring<br>for<br>lid | | 1 | |
| (3) | 996 397 015 00 | shaft sealing ring<br>for<br>flange | | 1 | |
| 4 | 986 397 029 00 | pan-head screw<br>M 8 X 45 | | 12 | |
| 5 | 986 397 028 00 | round seal | | 1 | |
| 6 | 986 397 034 00 | round seal | | 1 | |
| 7 | 996 397 007 00 | pan-head screw<br>M 8 X 30 | | 3 | |
| 8 | 986 397 026 00 | screw plug | | 1 | |
| 9 | 986 397 039 00 | shaft sealing ring<br>34 X 46-37 X 12-16 | | 1 | |

| Model | Year | MG | SG | Illustration | Restrictions | UPD | 18:16 | 30.07.2008 |
|---|---|---|---|---|---|---|---|---|
| 986 | 2004 | 3 | 20 | 320-05 | | 229 | | |

PORSCHE PET PORSCHE

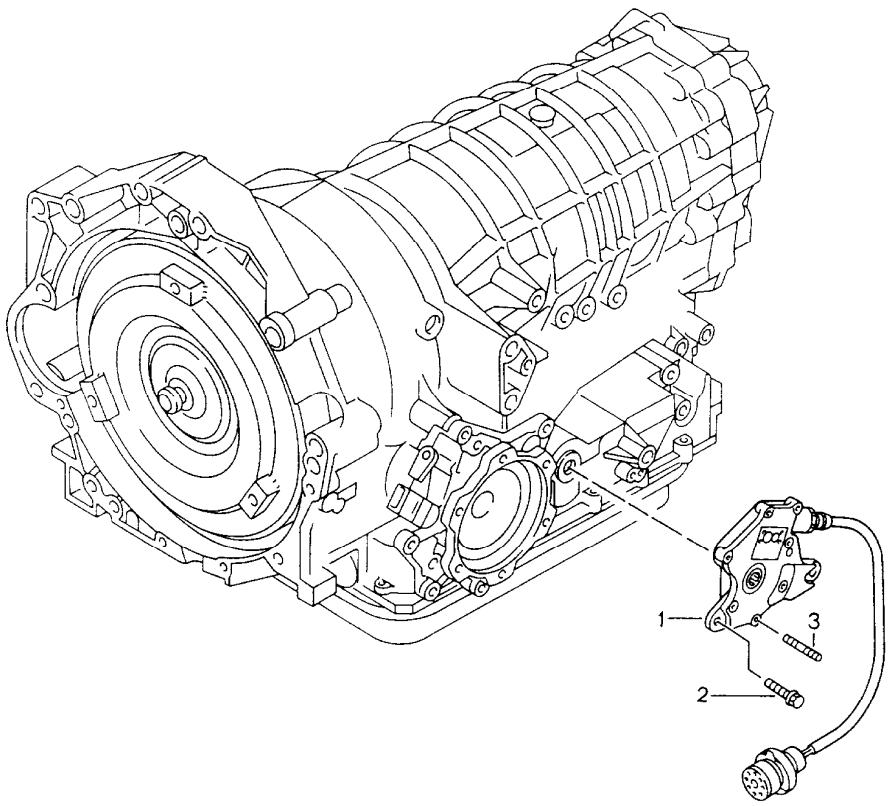


| Pos | Part Number | Description | Remark | Qty | Model |
|---|---|---|---|---|---|
| | | tiptronic | -99<br>00-<br>00- | | A86.00<br>A86.05<br>A86.20 |
| | | selector switch | | | |
| 1 | 986 325 612 01 | switch | | 1 | |
| 2 | 986 397 025 00 | pan-head screw<br>M 6 X 15 | | 2 | |
| 3 | 986 397 024 00 | straight pin<br>M 6 X 14 | | 1 | |

| Model | Year | MG | SG | Illustration | Restrictions | UPD | 18:16 | 30.07.2008 | PET |
|---|---|---|---|---|---|---|---|---|---|
| 986 | 2004 | 3 | 30 | 330-00 | | 229 | | | |

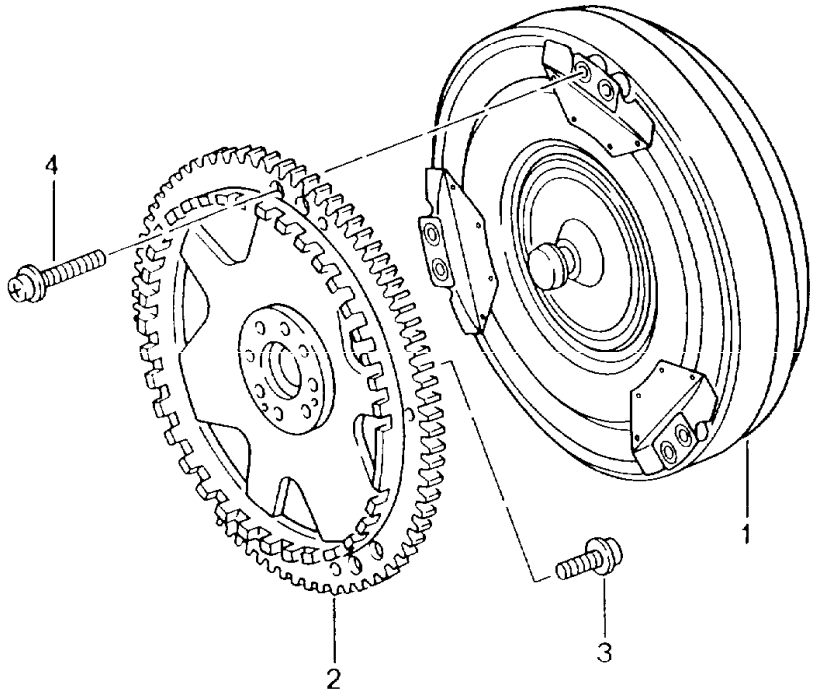


| Pos | Part Number | Description | Remark | Qty | Model |
|---|---|---|---|---|---|
| | | tiptronic | -99<br>00-<br>00- | | A86.00<br>A86.05<br>A86.20 |
| | | torque converter | | | |
| 1 | 986 316 001 00 | torque converter | | 1 | |
| 2 | 996 116 075 07 | drive plate | | 1 | |
| 3 | 999 073 091 09 | pan-head screw<br>M 10 X 1 X 25 | | 8 | |
| 4 | 900 067 369 09 | pan-head screw<br>M 8 X 20 | | 6 | |

| Model | Year | MG | SG | Illustration | Restrictions | UPD | 18:16 | 30.07.2008 | PET |
|---|---|---|---|---|---|---|---|---|---|
| 986 | 2004 | 3 | 30 | 330-01 | | 229 | | | |

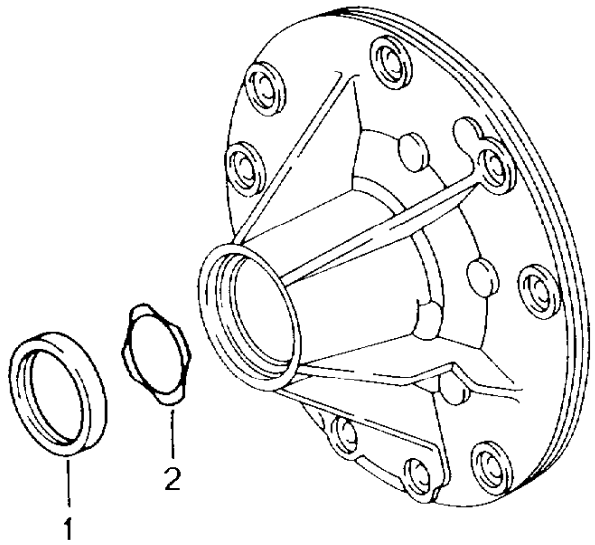


| Pos | Part Number | Description | Remark | Qty | Model |
|---|---|---|---|---|---|
| | | tiptronic | -99<br>00-<br>00- | | A86.00<br>A86.05<br>A86.20 |
| | | oil pump | | | |
| 1 | 996 397 010 00 | shaft sealing ring | | 1 | |
| 2 | 986 397 012 00 | washer | | 1 | |

| Model | Year | MG | SG | Illustration | Restrictions | UPD | 18:16 | 30.07.2008 | PET |
|---|---|---|---|---|---|---|---|---|---|
| 986 | 2004 | 3 | 40 | 340-01 | | 229 | | | |

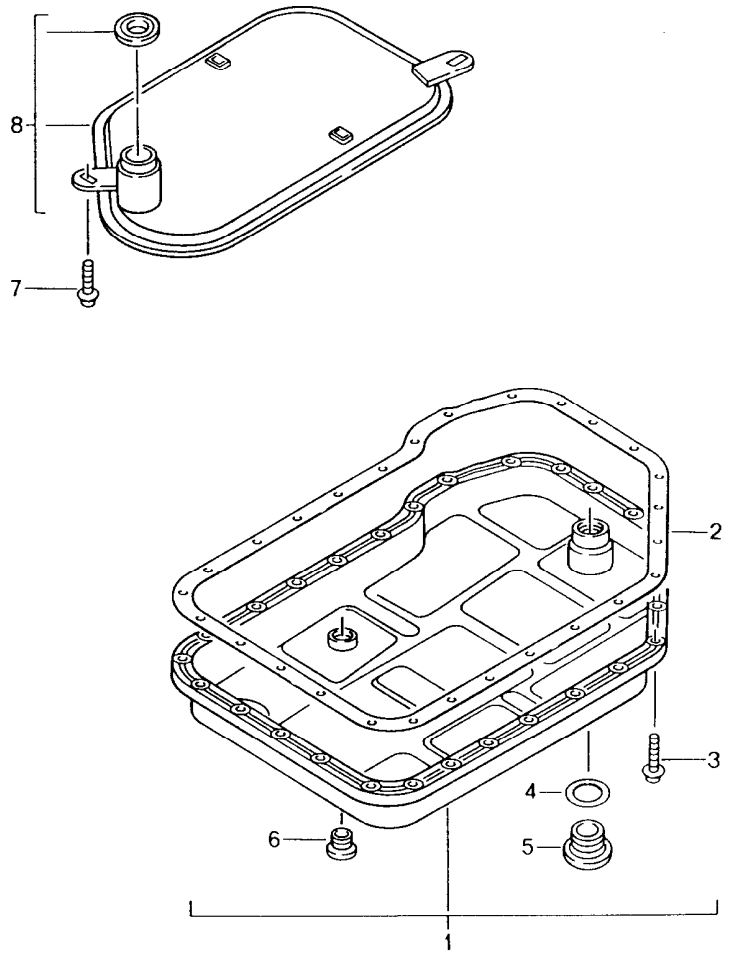


| Pos | Part Number | Description | Remark | Qty | Model |
|---|---|---|---|---|---|
| | | tiptronic | -99<br>00-<br>00- | | A86.00<br>A86.05<br>A86.20 |
| | | oil filter<br>oil pan | | | |
| 1 | 986 321 025 02 | oil pan | | 1 | |
| 2 | 986 397 016 00 | gasket | | 1 | |
| 3 | 943 397 039 00 | pan-head screw<br>M 6 X 20 | | 27 | |
| 4 | 986 397 014 00 | round seal | | 1 | |
| 5 | 986 397 015 00 | screw plug<br>M 30 X 1,5 | | 1 | |
| 6 | 986 397 013 00 | screw plug<br>M 16 X 1,5 | | 1 | |
| 7 | 943 397 045 00 | pan-head screw<br>M 5 X 12 | | 2 | |
| 8 | 986 307 403 00 | filter | | 2 | |

| Model | Year | MG | SG | Illustration | Restrictions | UPD | 18:17 | 30.07.2008 |
|---|---|---|---|---|---|---|---|---|
| 986 | 2004 | 3 | 40 | 340-02 | | 229 | | |

PORSCHE PET PORSCHE

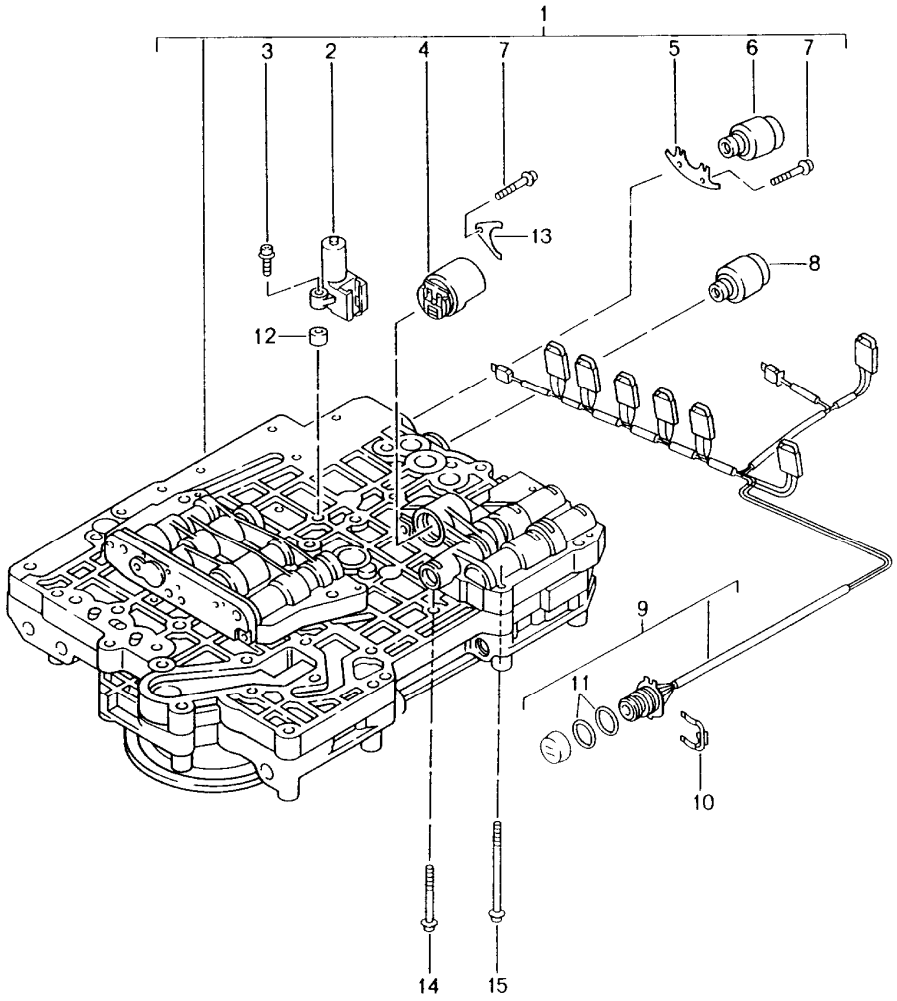


| Pos | Part Number | Description | Remark | Qty | Model |
|---|---|---|---|---|---|
| | | tiptronic | -99<br>00-<br>00- | | A86.00<br>A86.05<br>A86.20 |
| | | switch unit<br>solenoid valve<br>pressure regulator | | | |
| 1 | 986 325 617 00 | switch unit<br>type label<br>transmission case<br>attention<br>1060 030 031<br>>> 155 067 | <br><br><br><br>-99 | 1 | <br><br><br><br>A86.00 |
| 1 | 986 325 617 01 | switch unit<br>type label<br>transmission case<br>attention<br>1060 030 053<br><< 155 068 | <br><br><br><br>00- | 1 | <br><br><br><br>A86.05/20 |
| 2 | 986 325 608 00 | inductive transmitter | | 1 | |
| 3 | 986 397 019 00 | pan-head screw<br>M 5 X 40 | | 2 | |
| 4 | 986 325 604 00 | pressure regulator<br>type label<br>transmission case<br>attention<br>1060 030 031<br>>> 155 067 | <br><br><br><br>-99 | 1 | <br><br><br><br>A86.00 |
| 4 | 986 325 604 01 | pressure regulator<br>type label<br>transmission case<br>attention<br>1060 030 053<br><< 155 068 | <br><br><br><br>00- | 1 | <br><br><br><br>A86.05/20 |
| 5 | 986 325 615 00 | retaining bracket | | 2 | |
| 6 | 986 325 601 00 | solenoid valve | | 3 | |
| 7 | 943 397 045 00 | pan-head screw<br>M 5 X 12 | | 5 | |
| 8 | 986 325 603 00 | pressure regulator | | 3 | |
| 9 | 986 325 611 00 | wiring harness | | 1 | |
| 10 | 986 397 018 00 | clamp | | 1 | |
| 11 | 986 397 017 00 | round seal | | 2 | |
| 12 | 986 397 020 00 | spacer ring | | 2 | |

| Pos | Part Number | Description | Remark | Qty | Model |
|---|---|---|---|---|---|
| 13 | 943 325 111 00 | retaining bracket | | 1 | |
| 14 | 943 397 013 00 | pan-head screw<br>M 6 X 30 | | 1 | |
| 15 | 943 397 005 00 | pan-head screw<br>M 6 X 60 | | 16 | |

| Pos | Part Number | Description | Remark | Qty | Model |
|---|---|---|---|---|---|

| Model | Year | MG | SG | Illustration | Restrictions | UPD | 18:17 | 30.07.2008 |
|---|---|---|---|---|---|---|---|---|
| 986 | 2004 | 3 | 60 | 360-00 | | 229 | | |

PORSCHE PET PORSCHE

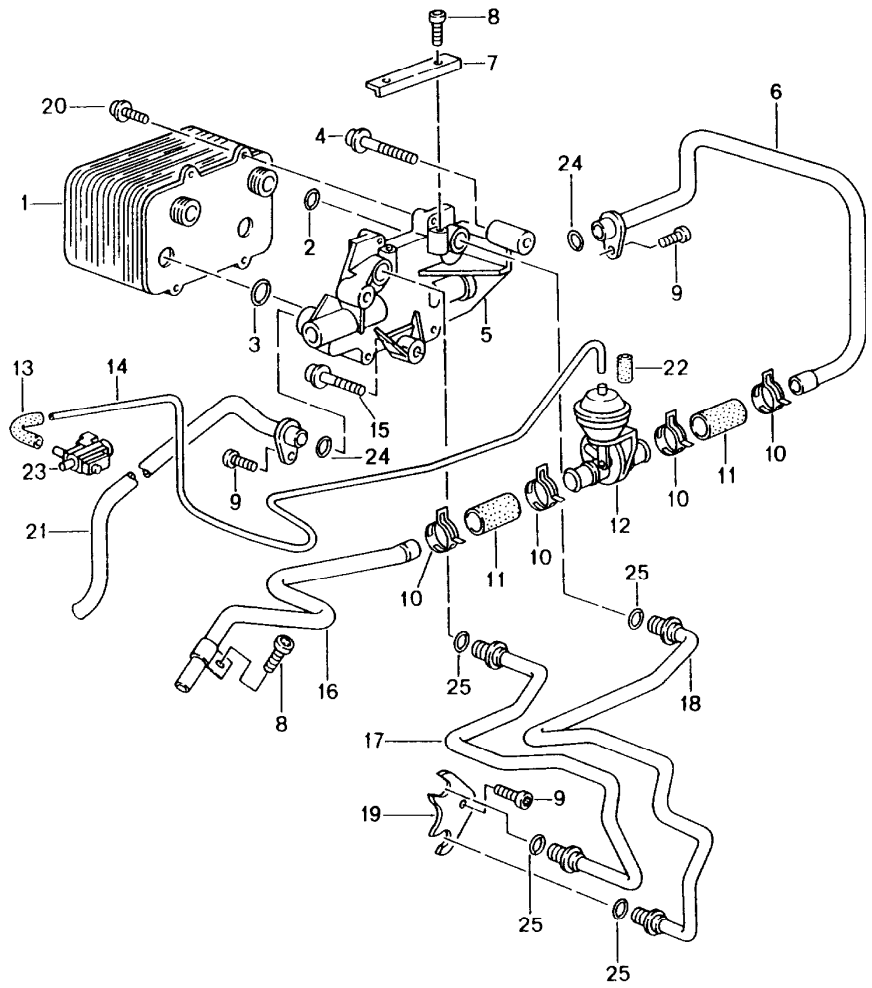


| Pos | Part Number | Description | Remark | Qty | Model |
|---|---|---|---|---|---|
| | | tiptronic | -99<br>00-<br>00- | | A86.00<br>A86.05<br>A86.20 |
| | | atf cooler<br>atf lines | | | |
| 1 | 996 307 017 01 | atf cooler | | 1 | |
| 2 | 999 707 388 40 | o-ring<br>18,64 X 3,53 | | 2 | |
| 3 | 900 331 034 40 | o-ring<br>25,8 X 3,55 | | 2 | |
| 4 | 999 073 116 09 | oval-head screw<br>M 8 X 55 | | 1 | |
| 5 | 986 307 020 00 | port plate | | 1 | |
| 6 | 986 307 076 00 | water line<br>supply | -00 | 1 | |
| 6 | 986 307 076 21 | water line<br>supply | 01- | 1 | |
| 7 | 986 307 143 02 | latch | | 1 | |
| 8 | 999 073 103 09 | oval-head screw<br>M 6 X 16 | | 2 | |
| 9 | 999 073 094 09 | oval-head screw<br>M 8 X 20 | | 1 | |
| 10 | 999 512 552 00 | hose clamp<br>25 X 12 | | 4 | |
| 11 | 900 181 060 50 | water hose<br>18 X 3,5 X 50 | | 4 | |
| (11) | 900 181 062 50 | water hose<br>18 X 3,5 X 60 | | 2 | |
| 12 | 928 574 573 03 | disc valve | | 1 | |
| 13 | 928 574 717 03 | moulded hose | | 1 | |
| -- | 999 181 742 40 | pipe<br>4 X 1 | | * | |
| 14 | - | 650 MM | | 1 | |
| 15 | 999 073 105 09 | round head screw<br>M 8 X 40 | | 2 | |
| 16 | 986 307 075 06 | water line<br>supply | -00 | 1 | |

| Pos | Part Number | Description | Remark | Qty | Model |
|---|---|---|---|---|---|
| 16 | 986 307 075 21 | water line<br>supply | 01- | 1 | |
| 17 | 986 307 085 04 | oil pipe<br>return line | | 1 | |
| 18 | 986 307 082 04 | oil pipe<br>supply | | 1 | |
| 19 | 996 307 147 00 | support | | 1 | |
| 20 | 999 073 103 09 | oval-head screw<br>M 6 X 16 | | 4 | |
| 21 | 986 307 077 06 | water line<br>return line | -99 | 1 | A86.00 |
| (21) | 986 307 077 21 | water line<br>return line | 00-<br>00- | 1 | A86.05<br>A86.20 |
| 22 | 999 239 040 40 | connecting piece | | 1 | |
| 23 | 996 605 123 01 | change-over valve | | 1 | |
| 24 | 999 707 387 40 | o-ring<br>15 X 2,5 | | 2 | |
| 25 | 999 707 386 40 | o-ring<br>12,37 X 2,62 | | 4 | |
| -- | 999 652 838 40 | plug socket | | 1 | |
| -- | 999 652 771 12 | connector | | 1 | |
| -- | 999 704 161 40 | gasket | | 2 | |
| -- | 999 181 389 40 | protective tube | | 1 | |

| Model | Year | MG | SG | Illustration | Restrictions | UPD | 18:17 | 30.07.2008 | PET |
|---|---|---|---|---|---|---|---|---|---|
| 986 | 2004 | 3 | 70 | 370-00 | | 229 | | | |

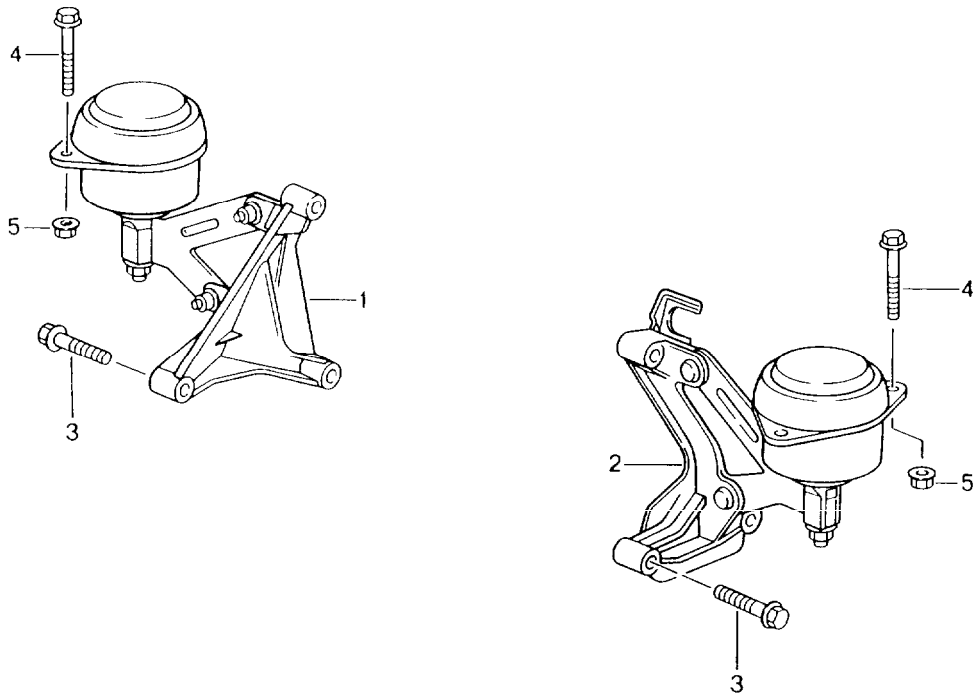


| Pos | Part Number | Description | Remark | Qty | Model |
|---|---|---|---|---|---|
| | | tiptronic | -99<br>00-<br>00- | | A86.00<br>A86.05<br>A86.20 |
| | | transmission suspension<br>threaded joint<br>engine | | | |
| 1 | 986 375 094 02 | transmission bracket<br>right | | 1 | |
| 2 | 986 375 093 02 | transmission bracket<br>left | | 1 | |
| 3 | 900 378 076 09 | hexagon-head bolt<br>M 10 X 50 | | 6 | |
| 4 | 900 378 056 02 | hexagon-head bolt<br>M 8 X 60 | | 4 | |
| 5 | 999 084 447 09 | hexagon nut<br>M 8 | | 4 | |
| 6 | 999 072 008 09 | hexagon-head bolt<br>M 12 X 1,5 X 70 | | 1 | |
| 7 | 999 072 009 09 | hexagon-head bolt<br>M 12 X 1,5 X 90 | | 3 | |
| 8 | 999 218 088 09 | stud<br>M 10 X 30 | | 1 | |
| 9 | 900 377 011 09 | hexagon nut<br>M 10 | | 1 | |
| 10 | 999 073 118 09 | pan-head screw<br>M 10 X 40 | | 1 | |
| 11 | N 905 028 02 | washer<br>15 X 28 X 3,5 | | 1 | |
| 12 | 999 072 010 09 | hexagon-head bolt<br>M 12 X 1,5 X 100 | | 1 | |

| Model | Year | MG | SG | Illustration | Restrictions | UPD | 18:17 | 30.07.2008 | PET |
|---|---|---|---|---|---|---|---|---|---|
| 986 | 2004 | 4 | 01 | 401-00 | | 229 | | | |

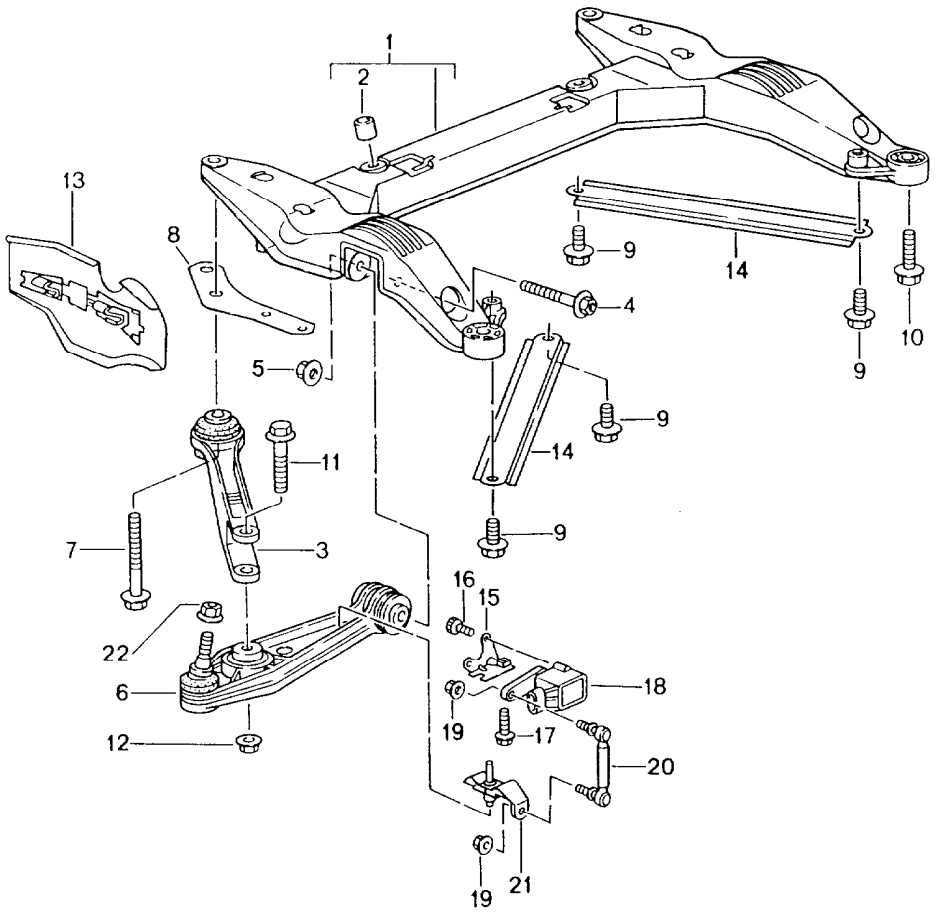


| Pos | Part Number | Description | Remark | Qty | Model |
|---|---|---|---|---|---|
| | | cross member<br>wishbone | | | |
| 1 | 996 341 081 05 | cross member<br>F >>98WS6 06069 | | 1 | |
| (1) | 996 341 081 10 | cross member<br>F 98WS6 06070>> | -01 | 1 | |
| (1) | A 996 341 081 12 | cross member | 02- | 1 | |
| (1) | 996 341 081 14 | cross member | 02- | 1 | |
| 2 | 900 197 004 00 | roll pin<br>13 X 14 | | 1 | |
| 3 | 996 341 043 06 | control arm | | 2 | |
| 4 | 900 378 165 09 | hexagon-head bolt<br>M 12 X 1,5 X 95 | | 2 | |
| 5 | 999 084 445 09 | hexagon nut<br>M 12 X 1,5 | | 2 | |
| 6 | A 996 341 053 06 | wishbone | 97 | 2 | |
| (6) | A 996 341 053 07 | wishbone | -03 | 2 | |
| (6) | 996 341 053 16 | wishbone | 04- | 2 | |
| (6) | 996 341 941 00 | wishbone<br>adjustable<br>with<br>eccentric screw<br>eccentric washer<br>and<br>hexagon nut<br>not<br>with<br>M 601 | | X | |
| (6) | 996 341 941 01 | wishbone<br>adjustable<br>with<br>eccentric screw<br>eccentric washer<br>and<br>hexagon nut | | X | M 601 |
| 7 | 900 378 146 09 | hexagon-head bolt<br>M 14 X 1,5 X 110 | | 2 | |
| 8 | 996 341 145 06 | plate | | 2 | |
| 9 | 900 378 094 09 | hexagon-head bolt<br>M 12 X 1,5 X 25 | | 4 | |

| Pos | Part Number | Description | Remark | Qty | Model |
|---|---|---|---|---|---|
| 10 | 900 378 145 09 | hexagon-head bolt<br>M 14 X 1,5 X 45<br>F >>98WS6 06069 | | 2 | |
| (10) | 900 378 192 09 | hexagon-head bolt<br>M 14 X 1,5 X 50<br>F 98WS6 06070>> | -01<br>02- | 2<br>4 | |
| 11 | 900 378 135 09 | hexagon-head bolt<br>M 14 X 1,5 X 73 | | 2<br>2 | |
| 12 | 900 380 012 09 | hexagon nut<br>M 14 X 1,5 | | 2 | |
| 13 | 996 341 483 01 | spoiler | /L | 1 | |
| (13) | 996 341 484 01 | spoiler | /R | 1 | |
| 14 | 996 504 433 00 | strut | | 2 | |
| 15 | 996 341 511 01 | support | 99 | 1 | M 601 |
| 15 | 996 341 511 02 | support | 00- | 1 | M 601 |
| 16 | N 014 129 12 | oval-head screw<br>M 5 X 10 | 99- | 2 | M 601 |
| 17 | 900 378 177 09 | hexagon-head bolt<br>M 6 X 30 | 99- | 1 | M 601 |
| 18 | 996 631 121 00 | sensor | 99- | 1 | M 601 |
| 19 | 900 380 015 09 | hexagon nut<br>VM 6 | 99- | 2 | M 601 |
| 20 | 996 341 375 01 | strut | 99- | 1 | M 601 |
| 21 | 996 341 371 03 | support | 99- | 1 | M 601 |
| 22 | 999 084 449 09 | hexagon nut<br>M 12 X 1,5 | | 2 | |

| Model | Year | MG | SG | Illustration | Restrictions | UPD | 18:18 | 30.07.2008 | PET |
|---|---|---|---|---|---|---|---|---|---|
| 986 | 2004 | 4 | 01 | 401-05 | | 229 | | | |

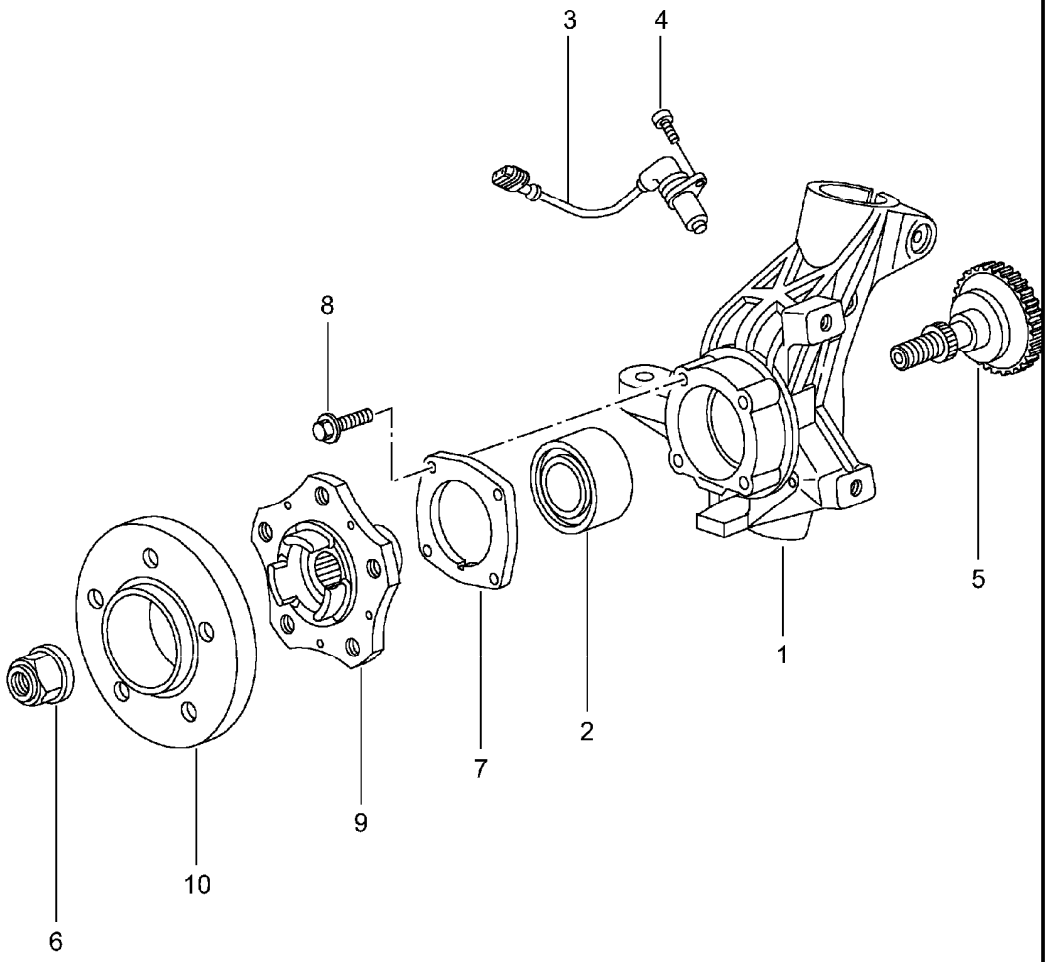


| Pos | Part Number | Description | Remark | Qty | Model |
|---|---|---|---|---|---|
| | | wheel carrier<br>wheel hub | | | |
| 1 | A 996 341 157 09 | wheel carrier | /L | 1 | |
| (1) | A 996 341 157 11 | wheel carrier | /L | 1 | |
| (1) | A 996 341 957 11 | wheel carrier | /L -00 | 1 | |
| (1) | 996 341 957 12 | wheel carrier | /L | 1 | |
| (1) | A 996 341 158 09 | wheel carrier | /R | 1 | |
| (1) | A 996 341 158 11 | wheel carrier | /R | 1 | |
| (1) | A 996 341 958 11 | wheel carrier | /R -00 | 1 | |
| (1) | 996 341 958 12 | wheel carrier | /R | 1 | |
| 2 | A 999 053 043 02 | angular-contact bearing | | 2 | |
| (2) | 999 053 041 02 | angular-contact bearing | -00 | 2 | |
| (2) | 999 053 041 03 | bearing | 01- | 2 | |
| 3 | 996 606 406 00 | speed sensor | -01 | 2 | |
| (3) | 996 606 406 00 | speed sensor | 01 | 2 | M 476 |
| (3) | 996 606 407 02 | speed sensor | 02- | 2 | |
| (3) | 996 606 406 00 | speed sensor | 02- | 2 | M 476 |
| - | 964 094 400 99 | spacer<br>see technical information group 4 NR.1/97 | | X | |
| - | 999 507 464 40 | clip | | 2 | |
| 4 | 900 067 117 09 | pan-head screw<br>M 6 X 16 | | 2 | |
| 5 | 996 341 131 01 | tension bolt | | 2 | |
| 6 | A 999 084 634 09 | hexagon nut<br>M 22 X 1,5 | | 2 | |
| (6) | 999 084 634 02 | hexagon nut<br>m 22 x 1,5 | | 2 | |
| 7 | 964 341 661 01 | lid | | 2 | |
| 8 | 999 217 042 09 | hexagon-head bolt<br>M 8 X 35 | | 8 | |
| 9 | 996 341 605 54 | wheel hub | | 2 | |

| Pos | Part Number | Description | Remark | Qty | Model |
|---|---|---|---|---|---|
| 10 | 997 361 605 90 | spacer ring | 01- | 2 | XRP |
| (10) | 997 361 605 90 | spacer ring<br>5 MM<br>see technical information<br>group 4<br>NR.1/04<br>NR.2/04 | 04 | 2 | M 091 |

| Pos | Part Number | Description | Remark | Qty | Model |
|---|---|---|---|---|---|

| Model | Year | MG | SG | Illustration | Restrictions | UPD | 18:18 | 30.07.2008 |
|---|---|---|---|---|---|---|---|---|
| 986 | 2004 | 4 | 02 | 402-00 | | 229 | | |

PORSCHE PET PORSCHE

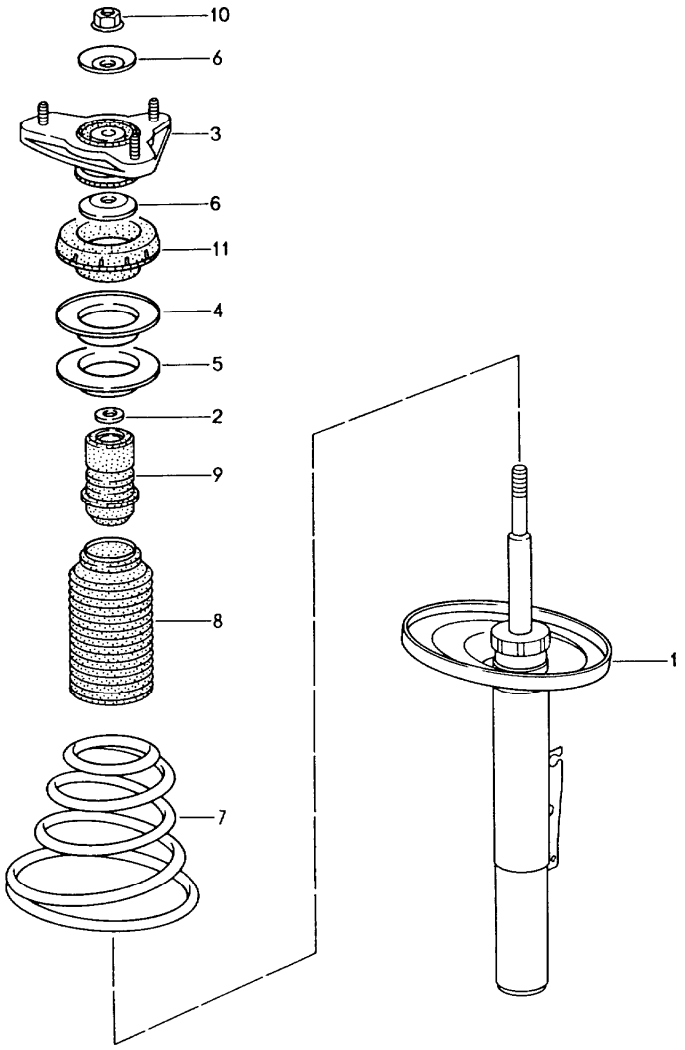


| Pos | Part Number | Description | Remark | Qty | Model |
|---|---|---|---|---|---|
| | | suspension<br>shock absorber strut | | | |
| 1 | A 986 343 041 02 | shock absorber<br>- bilstein - | -99 | 2 | |
| (1) | 986 343 041 04 | shock absorber<br>- bilstein - | -99 | 2 | |
| (1) | 986 343 041 20 | shock absorber<br>- bilstein - | 00- | 2 | |
| (1) | A 986 343 041 12 | shock absorber<br>- bilstein - | -99 | 2 | M 030 |
| (1) | 986 343 041 16 | shock absorber<br>- bilstein - | -99 | 2 | M 030 |
| (1) | 986 343 041 30 | shock absorber<br>- bilstein - | 00- | 2 | M 030 |
| | | mount<br>shock absorber | | | |
| - | 900 378 138 09 | hexagon-head bolt<br>M 12 X 1,5 X 70 | | 2 | |
| - | 999 084 445 09 | hexagon nut<br>M 12 X 1,5 | | 2 | |
| 2 | 996 343 513 00 | cone washer | | 2 | |
| 3 | 996 343 018 04 | supporting mount | -03 | 2 | |
| (3) | 997 343 018 00 | supporting mount | 04- | 2 | |
| - | 999 084 447 09 | hexagon nut<br>M 8 | | 6 | |
| - | 999 703 457 40 | lid | | 2 | |
| 4 | 996 343 517 01 | support ring | | 2 | |
| 5 | 996 343 511 00 | compensating plate<br>3,0 MM | | X | |
| (5) | 996 343 511 01 | compensating plate<br>6,5 MM | | X | |
| 6 | 996 343 107 02 | stop plate | -99 | 4 | |
| (6) | 996 343 107 03 | stop plate | 00- | 4 | |
| 7 | 986 343 531 01 | coil spring<br>1 set | -02 | 1 | |

| Pos | Part Number | Description | Remark | Qty | Model |
|---|---|---|---|---|---|
| | 504 | identification<br>blue<br>yellow | | | |
| (7) | 986 343 531 05 | coil spring<br>1 set | 03- | 1 | |
| | 504 | identification<br>blue<br>yellow | | | |
| (7) | 986 343 531 11 | coil spring<br>1 set | -02 | 1 | M 030 |
| | 504 | identification<br>red<br>yellow | | | |
| (7) | 986 343 531 15 | coil spring<br>1 set | 03- | 1 | M 030 |
| | 504 | identification<br>red<br>yellow | | | |
| 8 | 996 343 505 00 | bellows | | 2 | |
| 9 | 996 343 301 02 | additional spring | | 2 | |
| 10 | 900 380 012 09 | hexagon nut<br>M 14 X 1,5 | | 2 | |
| 11 | A 996 343 515 03 | deep-groove ball bearing<br>with housing | 97 | 2 | |
| (11) | A 996 343 515 04 | deep-groove ball bearing<br>with housing | 98- | 2 | |
| (11) | 996 343 515 05 | bearing<br>with housing | 00- | 2 | |

| Pos | Part Number | Description | Remark | Qty | Model |
|---|---|---|---|---|---|

| Model | Year | MG | SG | Illustration | Restrictions | UPD | 18:18 | 30.07.2008 |
|---|---|---|---|---|---|---|---|---|
| 986 | 2004 | 4 | 02 | 402-05 | | 229 | | |

PORSCHE PET PORSCHE

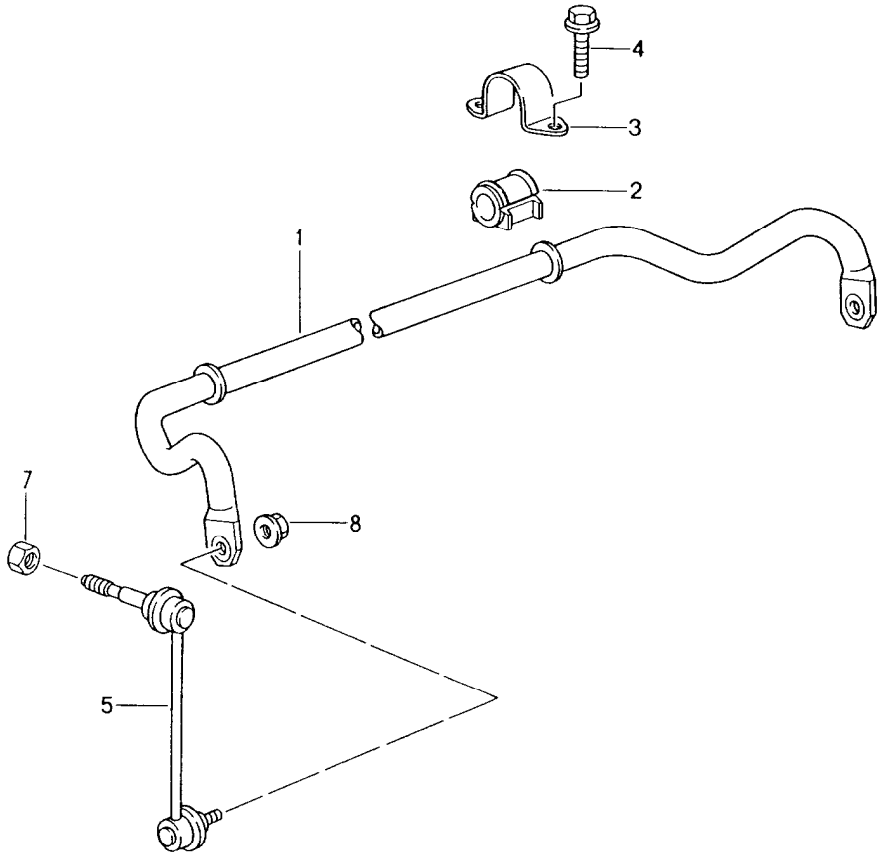


| Pos | Part Number | Description | Remark | Qty | Model |
|---|---|---|---|---|---|
| | | stabiliser | | | |
| 1 | 996 343 701 09 | stabiliser | -99 | 1 | |
| (1) | A 996 343 701 04 | stabiliser | -99 | 1 | M 030 |
| (1) | 996 343 701 21 | stabiliser | -99 | 1 | M 030 |
| (1) | 996 343 701 09 | stabiliser | 00- | 1 | |
| (1) | A 996 343 701 04 | stabiliser | 00-<br>00- | 1<br>1 | M 008<br>M 030 |
| (1) | 996 343 701 21 | stabiliser | 00-<br>00- | 1 | M 008<br>M 030 |
| (1) | A 996 343 701 10 | stabiliser | 00- | 1 | M 008/030 |
| (1) | 996 343 701 23 | stabiliser | 00- | 1 | M 008/030 |
| 2 | 996 343 792 14 | stabiliser mounting | -99 | 2 | |
| (2) | 996 343 792 12 | stabiliser mounting | -99 | 2 | M 030 |
| (2) | 996 343 792 14 | stabiliser mounting | 00- | 2 | |
| (2) | 996 343 792 12 | stabiliser mounting | 00-<br>00- | 2<br>2 | M 008<br>M 030 |
| (2) | 996 343 792 17 | stabiliser mounting | 00- | 2 | M 008/030 |
| 3 | 996 343 777 01 | clip | | 2 | |
| 4 | 900 378 070 09 | hexagon-head bolt<br>M 10 X 30 | | 4 | |
| 5 | 996 343 069 02 | stabiliser mounting | /L -99 | 1 | |
| (5) | 996 343 069 03 | stabiliser mounting | /L 00- | 1 | |
| (5) | 996 343 070 02 | stabiliser mounting | /R -99 | 1 | |
| (5) | 996 343 070 03 | stabiliser mounting | /R 00- | 1 | |
| 7 | 999 084 445 09 | hexagon nut<br>M 12 X 1,5 | | 2 | |
| 8 | 999 084 643 09 | hexagon nut<br>M10 | | 2 | |

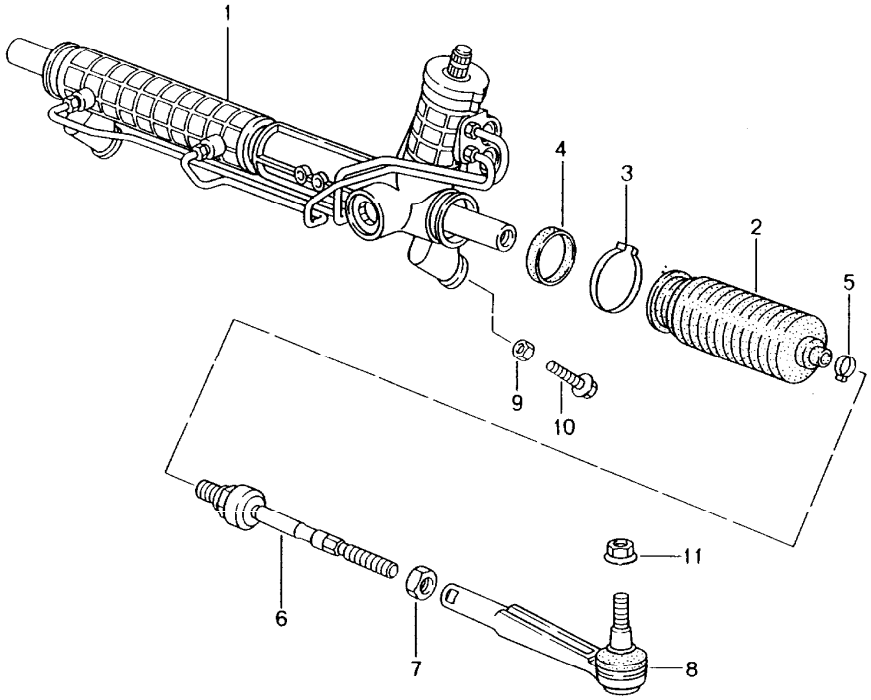


| Pos | Part Number | Description | Remark | Qty | Model |
|---|---|---|---|---|---|
| | | power steering<br>steering gear<br>steering parts | | | |
| 1 | A 996 347 011 04 | steering gear<br>power steering | /LL 97 | 1 | |
| (1) | A 996 347 012 04 | steering gear<br>power steering | /RL 97 | 1 | |
| (1) | A 996 347 011 05 | steering gear<br>power steering | /LL 98- | 1 | |
| (1) | A 996 347 011 06 | steering gear<br>power steering | /LL 98- | 1 | |
| (1) | > 996 347 011 07 | steering gear<br>power steering | /LL | 1 | |
| (1) | A 996 347 012 05 | steering gear<br>power steering | /RL -98 | 1 | |
| (1) | A 996 347 012 07 | steering gear<br>power steering | /RL 00 | 1 | |
| (1) | > 996 347 012 08 | steering gear<br>power steering | /RL | 1 | |
| - | A 996 347 110 01 | clip<br>pinion<br>steering gear | -03 | 1 | |
| - | 996 347 110 02 | clip<br>pinion<br>steering gear | 04- | 1 | |
| 2 | 996 347 191 02 | bellows<br>for<br>steering gear<br>996.347.011.04<br>996.347.012.04<br>996.347.011.05<br>996.347.012.05 | | 2 | |
| (2) | 996 347 191 04 | bellows<br>for<br>steering gear<br>996.347.011.06/07<br>996.347.012.07/08 | | 2 | |
| 3 | 996 347 293 03 | clamping ring<br>for<br>steering gear<br>996.347.011.04<br>996.347.012.04<br>996.347.011.05<br>996.347.012.05 | | 2 | |

| Pos | Part Number | Description | Remark | Qty | Model |
|---|---|---|---|---|---|
| N(3) | 996 347 293 04 | clamping ring<br>for<br>steering gear<br>996.347.011.06/07<br>996.347.012.07/08 | | 2 | |
| 4 | A 996 347 373 00 | sealing ring | | 2 | |
| (4) | 997 347 373 00 | sealing ring<br>for<br>steering gear<br>996.347.011.04<br>996.347.012.04<br>996.347.011.05<br>996.347.012.05 | | 2 | |
| (4) | 997 347 373 00 | sealing ring<br>for<br>steering gear<br>996.347.011.06/07<br>996.347.012.07/08 | | 2 | |
| 5 | 999 512 645 09 | clamping ring | | 2 | |
| 6 | 996 347 322 03 | joint | | 2 | |
| 7 | 900 034 024 07 | hexagon nut<br>M 14 X 1,5 | | 2 | |
| 8 | 996 347 131 03 | track rod | | 2 | |
| 9 | - | see illustrations<br>4/01/00<br>POS.2 | | | |
| 10 | 900 378 100 09 | hexagon-head bolt<br>AM 10 X 45 | | 2 | |
| 11 | 999 084 449 09 | hexagon nut<br>M 12 X 1,5 | | 2 | |

| Pos | Part Number | Description | Remark | Qty | Model |
|---|---|---|---|---|---|

| Model | Year | MG | SG | Illustration | Restrictions | UPD | 18:18 | 30.07.2008 | PET |
|---|---|---|---|---|---|---|---|---|---|
| 986 | 2004 | 4 | 03 | 403-01 | | 229 | | | |

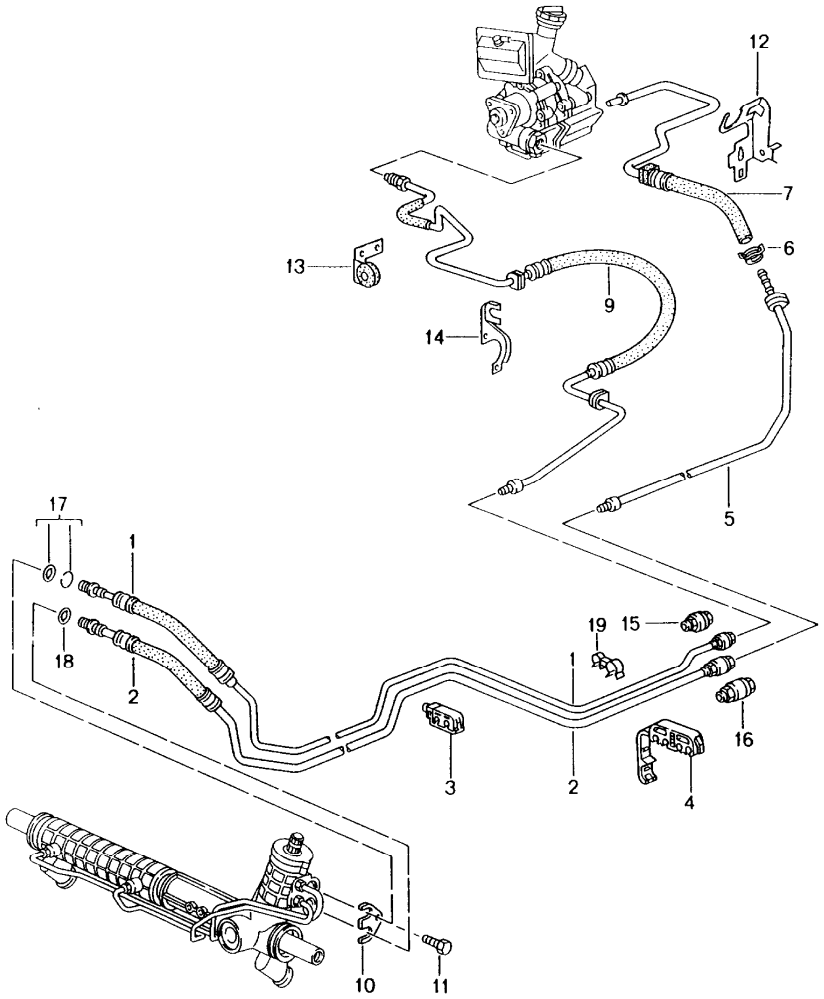


| Pos | Part Number | Description | Remark | Qty | Model |
|---|---|---|---|---|---|
| | | power steering lines | | | |
| 1 | 996 347 451 08 | pressure line | /LL -01 | 1 | |
| (1) | A 996 347 451 09 | pressure line | /LL 02 | 1 | |
| (1) | 996 347 451 10 | pressure line | /LL 03- | 1 | |
| (1) | A 996 347 452 03 | pressure line | /RL 97 | 1 | |
| (1) | 996 347 452 04 | pressure line | /RL 98- | 1 | |
| (1) | A 996 347 452 07 | pressure line | /RL 02 | 1 | |
| (1) | 996 347 452 08 | pressure line | /RL 03- | 1 | |
| 2 | 996 347 449 06 | return line | /LL -01 | 1 | |
| (2) | 996 347 449 09 | return line | /LL 02- | 1 | |
| (2) | 996 347 450 02 | return line | /RL 97 | 1 | |
| (2) | 996 347 450 03 | return line | /RL 98- | 1 | |
| (2) | 996 347 450 06 | return line | /RL 02- | 1 | |
| 3 | 996 347 543 00 | support | | X | |
| 4 | 996 355 543 00 | support | | 1 | |
| - | 996 347 674 00 | support pressure line return line | /RL | 1 | |
| 5 | A 986 347 441 07 | return line | -98 | 1 | |
| (5) | A 986 347 441 08 | return line | 99- | 1 | |
| (5) | 986 347 441 09 | return line | 99- | 1 | |
| 6 | 999 512 639 09 | clip | | 1 | |
| 7 | A 986 347 439 03 | return line | -99 | 1 | |
| (7) | A 986 347 439 04 | return line | -02 | 1 | |
| (7) | U 986 347 439 05 | return line | 03- | 1 | |
| (7) | 986 347 439 06 | return line | 03- | 1 | |
| 8 | 996 355 543 00 | support | | 1 | |
| - | 999 230 578 40 | circlip for threaded joint return line | 04- | 1 | |

| Pos | Part Number | Description | Remark | Qty | Model |
|---|---|---|---|---|---|
| 9 | 986 347 443 09 | pressure line | -98 | 1 | |
| (9) | 986 347 443 10 | pressure line | 99 | 1 | |
| (9) | A 986 347 443 12 | pressure line | 00- | 1 | |
| (9) | 986 347 443 13 | pressure line | 00- | 1 | |
| (9) | 986 347 443 15 | pressure line | 03- | 1 | |
| - | 986 347 777 00 | support<br>for<br>pressure line | | 1 | |
| - | 999 707 355 40 | sealing ring<br>7,65 X 1,65<br>for<br>pressure line<br>986.347.443.09/10/12/13 | | 1 | |
| - | 999 707 503 40 | sealing ring<br>7,80 X 1,70<br>for<br>pressure line<br>986.347.443.14 | | 1 | |
| - | 999 507 610 09 | support<br>return line<br>pressure line | 99- | 1 | |
| 10 | 996 347 769 01 | tension shackle | | 1 | |
| 11 | 900 067 063 02 | pan-head screw<br>M 10 X 20 | | 1 | |
| 12 | 986 347 759 01 | support | | 1 | |
| 13 | 986 347 739 03 | support | -02 | 1 | |
| (13) | 986 347 739 04 | support | 03- | 1 | |
| 14 | 986 347 749 02 | support | -02 | 1 | |
| (14) | 986 347 749 04 | support | 03- | 1 | |
| | | mount<br>pressure line<br>return line<br>power steering | | | |
| - | 996 347 671 01 | support<br>left | /RL | 1 | |
| - | 996 347 672 01 | support<br>right | /RL | 1 | |
| 15 | A 999 230 539 10 | threaded joint | | 1 | |
| (15) | 999 230 552 10 | threaded joint | | 1 | |
| 16 | A 999 230 540 10 | threaded joint | | 1 | |
| (16) | 999 230 551 10 | threaded joint | | 1 | |
| - | 999 230 685 40 | circlip<br>for<br>threaded joint | | 1 | |
| 17 | 999 230 543 40 | repair kit<br>gaskets | | 1 | |
| 18 | 999 230 542 40 | o-ring | | 1 | |

| Model | Year | MG | SG | Illustration | Restrictions | UPD | 18:19 | 30.07.2008 |
|---|---|---|---|---|---|---|---|---|
| 986 | 2004 | 4 | 03 | 403-03 | | 229 | | |

PORSCHE PET PORSCHE

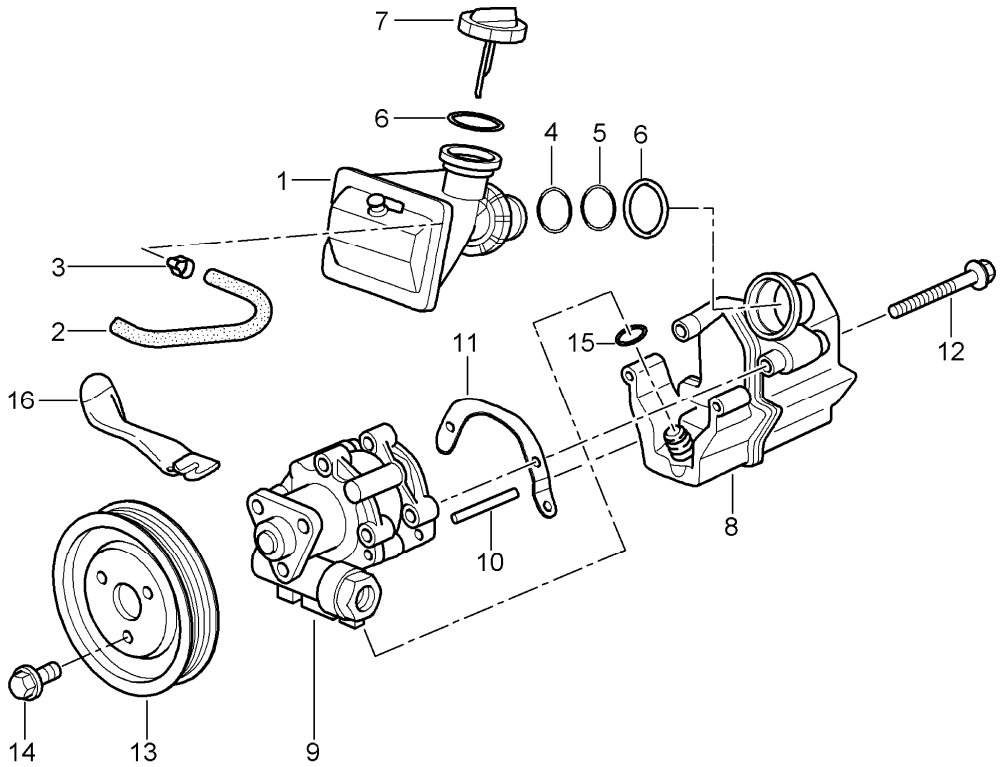


| Pos | Part Number | Description | Remark | Qty | Model |
|---|---|---|---|---|---|
| | | power steering<br>power-steering pump<br>container | | | |
| 1 | 986 314 225 01 | expansion tank | | 1 | |
| 2 | 986 314 545 00 | hose | | 1 | |
| 3 | 999 512 527 00 | terminal | | 1 | |
| 4 | 999 707 362 40 | o-ring | | 1 | |
| 5 | 999 707 363 40 | o-ring | | 1 | |
| 6 | 999 701 154 40 | o-ring | | 2 | |
| 7 | 986 314 223 00 | lid | | 1 | |
| 8 | A 996 314 220 03 | container | -02 | 1 | |
| (8) | 997 314 220 00 | container | | 1 | |
| 9 | 996 314 050 02 | power-steering pump | | 1 | |
| 10 | 996 314 320 03 | straight pin | | 2 | |
| 11 | 996 314 431 05 | bracket | | 1 | |
| 12 | 900 378 105 09 | hexagon-head bolt<br>AM 8 X 70 | | 2 | |
| 13 | 996 147 223 60 | pulley | -99<br>-99 | 1<br>1 | M 249<br>M 480/574 |
| (13) | 996 147 223 53 | pulley | -99 | 1 | M 480/573 |
| (13) | 996 147 223 60 | pulley | 00- | 1 | |
| 14 | 900 378 123 09 | hexagon-head bolt<br>M 8 X 12 | | 3 | |
| 15 | 999 707 204 40 | sealing ring<br>12.5 X 2N | | 1 | |
| 16 | 986 426 287 02 | support<br>F >>98WS6 02046 | | 1 | M 249 |
| - | 000 043 203 33 | pentosin<br>1000 ML | | X | |

| Model | Year | MG | SG | Illustration | Restrictions | UPD | 18:19 | 30.07.2008 |
|---|---|---|---|---|---|---|---|---|
| 986 | 2004 | 4 | 03 | 403-05 | | 229 | | |

PORSCHE PET PORSCHE

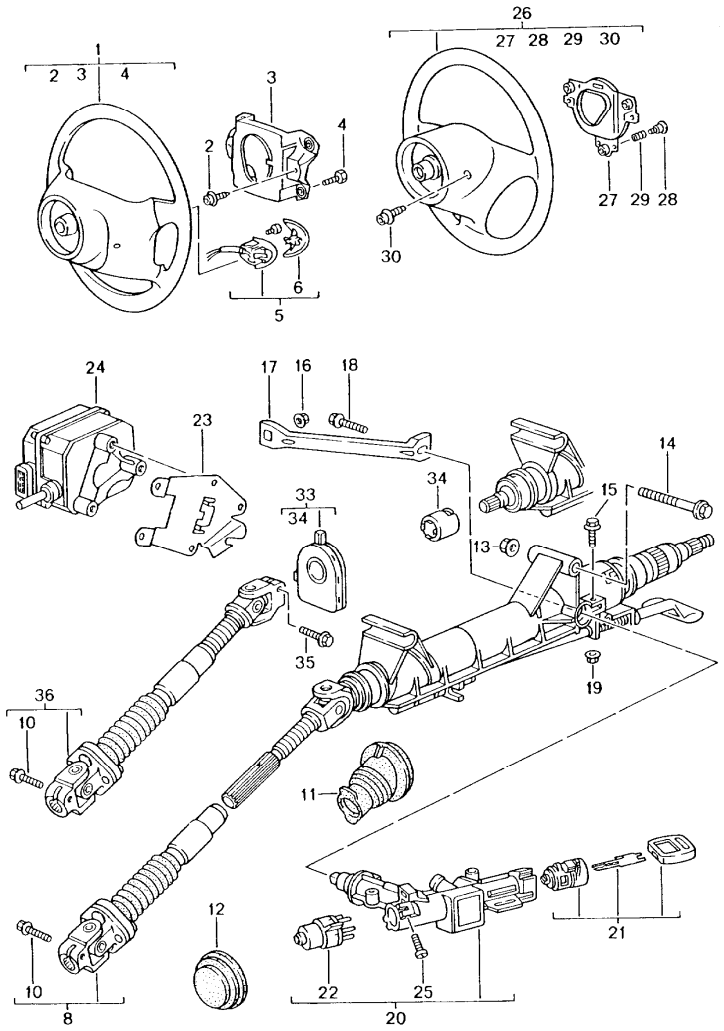


| Pos | Part Number | Description | Remark | Qty | Model |
|---|---|---|---|---|---|
| | | steering outer tube<br>steering shaft<br>steering wheels | | | |
| 1 | 993 347 804 55 | steering wheel | 97 | 1 | M 481 |
| | 8YR | black | -00 | | |
| (1) | 993 347 804 56 | steering wheel | 98-01 | 1 | M 481 |
| | 8YR | black | -00 | | |
| | A28 | black | 01 | | |
| (1) | 993 347 804 63 | steering wheel | 97 | 1 | M 249 |
| | 8YR | black | -00 | | |
| (1) | 993 347 804 64 | steering wheel | 98-01 | 1 | M 249 |
| | 8YR | black | -00 | | |
| | A28 | black | 01 | | |
| | | mount<br>steering wheel<br>steering shaft | | | |
| - | N 012 238 1 | spring washer<br>B 16 | | 1 | |
| - | 900 078 006 01 | hexagon nut<br>M 16 X 1,5 | | 1 | |
| 2 | 999 073 134 02 | pan-head screw<br>M 6 X 9,1 | | 2 | |
| 3 | 993 347 088 01 | retaining frame | | 1 | |
| 4 | 999 073 127 02 | hexagon-head bolt<br>M 5 X 20 | | 2 | |
| 5 | 993 347 831 00 | switch | | 1 | M 249 |
| | | | 98- | 1 | M 432 |
| 6 | 993 347 835 00 | lever | /L | 1 | M 249 |
| | | | /L 98- | 1 | M 432 |
| | 01C | black | | | |
| (6) | 993 347 836 00 | lever | /R | 1 | M 249 |
| | | | /R 98- | 1 | M 432 |
| | 01C | black | | | |

| Pos | Part Number | Description | Remark | Qty | Model |
|---|---|---|---|---|---|
| 7 | 900 146 016 02 | round head screw<br>M 3 X 6 | 98- | 4<br>4 | M 249<br>M 432 |
| 8 | A 996 347 007 01 | steering column<br>complete<br>with<br>steering shaft | 97 | 1 | |
| (8) | A 996 347 007 04 | steering column<br>complete<br>with<br>steering shaft | -99 | 1 | |
| (8) | 996 347 007 05 | steering column<br>complete<br>with<br>steering shaft | 00- | 1 | |
| (8) | A 996 347 007 02 | steering column<br>complete<br>with<br>steering shaft | 01- | 1 | M 476 |
| (8) | A 996 347 007 06 | steering column<br>complete<br>with<br>steering shaft<br>see technical manual<br>group 4<br>NR.45.... | 01- | 1 | M 476 |
| (8) | 996 347 007 07 | steering column<br>complete<br>with<br>steering shaft | 03- | 1 | M 476 |
| 9 | U 986 347 025 00 | universal joint | | 1 | |
| 10 | 999 217 042 09 | hexagon-head bolt<br>M 8 X 35 | | 1 | |
| 11 | 986 347 037 00 | bellows | -99 | 1 | |
| (11) | 986 347 037 01 | bellows | 00- | 1 | |
| 12 | 996 347 339 02 | rubber seal | | 1 | |
| 13 | 900 380 008 09 | hexagon nut<br>M 10 | | 1 | |
| 14 | 900 378 095 09 | hexagon-head bolt<br>M 10 X 100 | | 1 | |
| 15 | 900 378 157 09 | hexagon-head bolt<br>AM 6 X 25 | | 1 | |
| 16 | 999 076 055 09 | hexagon nut<br>M 8 | | 1 | |
| 17 | 996 347 243 01 | strut | | 1 | |
| 18 | 900 378 055 09 | hexagon-head bolt<br>AM 8 X 40 | | 1 | |
| 19 | 900 377 002 02 | hexagon nut<br>M 6 | | 1 | |
| 20 | A 996 347 017 03 | steering lock housing | | 1 | |
| (20) | A 996 347 017 04 | steering lock housing | | 1 | |
| (20) | A 996 347 017 05 | steering lock housing | | 1 | |
| (20) | 996 347 017 06 | steering lock | -03 | 1 | |
| (20) | 996 347 017 07 | steering lock<br>see technical information<br>group 2<br>NR.1/03 | 04- | 1 | |
| 21 | 996 347 917 00 | lock cylinder<br>with stipulated lock number | -01 | 1 | |
| (21) | 996 347 917 01 | lock cylinder<br>with stipulated lock number | 02- | 1 | |
| (21) | 996 347 915 00 | lock cylinder<br>w/o stipulated lock number | -01 | 1 | |
| (21) | 996 347 915 01 | lock cylinder<br>w/o stipulated lock number | 02- | 1 | |
| 22 | A 4A0 905 849 | ignition starter switch | | 1 | |
| (22) | 4A0 905 849 B | ignition starter switch | -03 | 1 | |
| (22) | 4B0 905 849 | ignition starter switch<br>see technical information<br>group 2<br>NR.1/03 | 04- | 1 | |
| 23 | 996 617 121 00 | support | /RL -99 | 1 | |
| 24 | 996 617 021 03 | control unit<br>cruise control | 97 | 1 | |
| (24) | 996 617 021 04 | control unit<br>cruise control | 98- | 1 | |
| 25 | 996 347 901 00 | slotted screw | | 2 | |
| 26 | A 996 347 804 52 | steering wheel | 98- | 1 | M 436 |

| Pos | Part Number | Description | Remark | Qty | Model |
|---|---|---|---|---|---|
| | 8YR | black | | | |
| | B50 | space grey | | | |
| | C50 | graphite grey | | | |
| | G10 | metropole blue | | | |
| | S30 | savanna | | | |
| (26) | 996 347 804 53 | steering wheel | 99 | 1 | M 436 |
| | 8YR | black | | | |
| | B50 | space grey | | | |
| | C50 | graphite grey | | | |
| | G10 | metropole blue | | | |
| | S30 | savanna | | | |
| (26) | 996 347 804 54 | steering wheel | 00- | 1 | M 436 |
| | A08 | black | -00 | | |
| | A28 | black | 01- | | |
| | B50 | space grey | | | |
| | C56 | graphite grey | -00 | | |
| | C60 | graphite grey | 01- | | |
| | G16 | metropole blue | -00 | | |
| | G30 | metropole blue | 01- | | |
| | S36 | savanna | -00 | | |
| | S40 | savanna | 01- | | |
| | J40 | nephrite green | 03 | | |
| | M40 | boxster red | 03- | | |
| | P20 | cinnamon brown | 03- | | |
| | D11 | dark grey/natural | 03- | | |
| | T11 | brown/natural | 03- | | |
| (26) | 996 347 804 57 | steering wheel | 04 | 1 | M 091/436 |
| | EWE | cocoa | | | |
| | VTB | dark grey/natural | | | |
| (26) | 996 347 983 28 | steering wheel | 03- | 1 | XPG |
| | A28 | black | | | |
| | C60 | graphite grey | | | |
| | S40 | savanna | | | |
| | G30 | metropole blue | | | |
| | J40 | nephrite green | 03 | | |
| | M40 | boxster red | | | |
| | P20 | cinnamon brown | | | |
| | D11 | dark grey/natural | | | |
| | T11 | brown/natural | | | |
| (26) A | 996 347 804 62 | steering wheel | 98- | 1 | M 436<br>M 432 |
| | 8YR | black | | | |
| | B50 | space grey | | | |
| | C50 | graphite grey | | | |
| | G10 | metropole blue | | | |
| | S30 | savanna | | | |
| (26) | 996 347 804 63 | steering wheel | 99 | 1 | M 436<br>M 432 |
| | 8YR | black | | | |
| | B50 | space grey | | | |
| | C50 | graphite grey | | | |
| | G10 | metropole blue | | | |
| | S30 | savanna | | | |
| (26) | 996 347 804 64 | steering wheel | 00- | 1 | M 436<br>M 432 |
| | A08 | black | -00 | | |
| | A28 | black | 01- | | |
| | B50 | space grey | | | |
| | C56 | graphite grey | -00 | | |

| Pos | Part Number | Description | Remark | Qty | Model |
|---|---|---|---|---|---|
| | C60 | graphite grey | 01- | | |
| | G16 | metropole blue | -00 | | |
| | G30 | metropole blue | 01- | | |
| | S36 | savanna | -00 | | |
| | S40 | savanna | 01- | | |
| | J40 | nephrite green | 03 | | |
| | M40 | boxster red | 03- | | |
| | P20 | cinnamon brown | 03- | | |
| | D11 | dark grey/natural | 03- | | |
| | T11 | brown/natural | 03- | | |
| (26) | 996 347 804 67 | steering wheel | 04 | 1 | M 091<br>M 436/432 |
| | EWE | cocoa | | | |
| | VTB | dark grey/natural | | | |
| (26) | 996 347 983 29 | steering wheel | 03- | 1 | M 432/XPG |
| | A28 | black | | | |
| | C60 | graphite grey | | | |
| | S40 | savanna | | | |
| | G30 | metropole blue | | | |
| | J40 | nephrite green | 03 | | |
| | M40 | boxster red | | | |
| | P20 | cinnamon brown | | | |
| | D11 | dark grey/natural | | | |
| | T11 | brown/natural | | | |
| - | 996 347 831 00 | switch | 98- | 1 | M 436<br>M 432 |
| - | 996 347 835 00 | lever | 98- | 1 | M 436 |
| | 01C | black | | | M 432 |
| - | 996 347 836 00 | lever | 98- | 1 | M 436 |
| | 01C | black | | | M 432 |

| Pos | Part Number | Description | Remark | Qty | Model |
|---|---|---|---|---|---|
| | | mount<br>steering wheel<br>steering shaft | | | |
| - | N 012 238 1 | spring washer<br>B 16 | | 1 | |
| - | 900 078 006 01 | hexagon nut<br>M 16 X 1,5 | | 1 | |
| 27 | A 996 347 880 00 | retaining frame | 98- | 1 | M 436 |
| (27) | 996 347 880 01 | retaining frame | 99 | 1 | |
| (27) | 996 347 880 02 | mounting plate | 00- | 1 | |
| 28 | 999 073 184 02 | round head screw<br>M 5 X 18,7 | 98- | 2 | M 436 |
| 29 | 999 521 079 02 | compression spring | 98- | 2 | M 436 |
| 30 | 999 073 183 02 | pan-head screw<br>M 6 X 10,5 | 98- | 2 | M 436 |
| 33 | 996 606 109 02 | steering-angle sensor<br>see technical manual<br>group 4<br>NR.45.... | -02 | 1 | M 476 |
| (33) | 996 606 119 00 | steering-angle sensor | 03- | 1 | M 476 |
| - | 996 610 123 00 | cable guide<br>for<br>steering-angle sensor | -02 | 1 | M 476 |
| - | 996 610 123 01 | cable guide<br>for<br>steering-angle sensor | 03- | 1 | M 476 |
| 34 | 996 347 705 00 | adapter | 01- | 1 | M 476 |
| 35 | 999 217 042 09 | hexagon-head bolt | 01- | 1 | M 476 |
| 36 | 996 347 023 00 | steering shaft | 01- | 1 | M 476 |

| Model | Year | MG | SG | Illustration | Restrictions | UPD | 18:19 | 30.07.2008 | PET |
|---|---|---|---|---|---|---|---|---|---|
| 986 | 2004 | 4 | 03 | 403-06 | | 229 | | | |

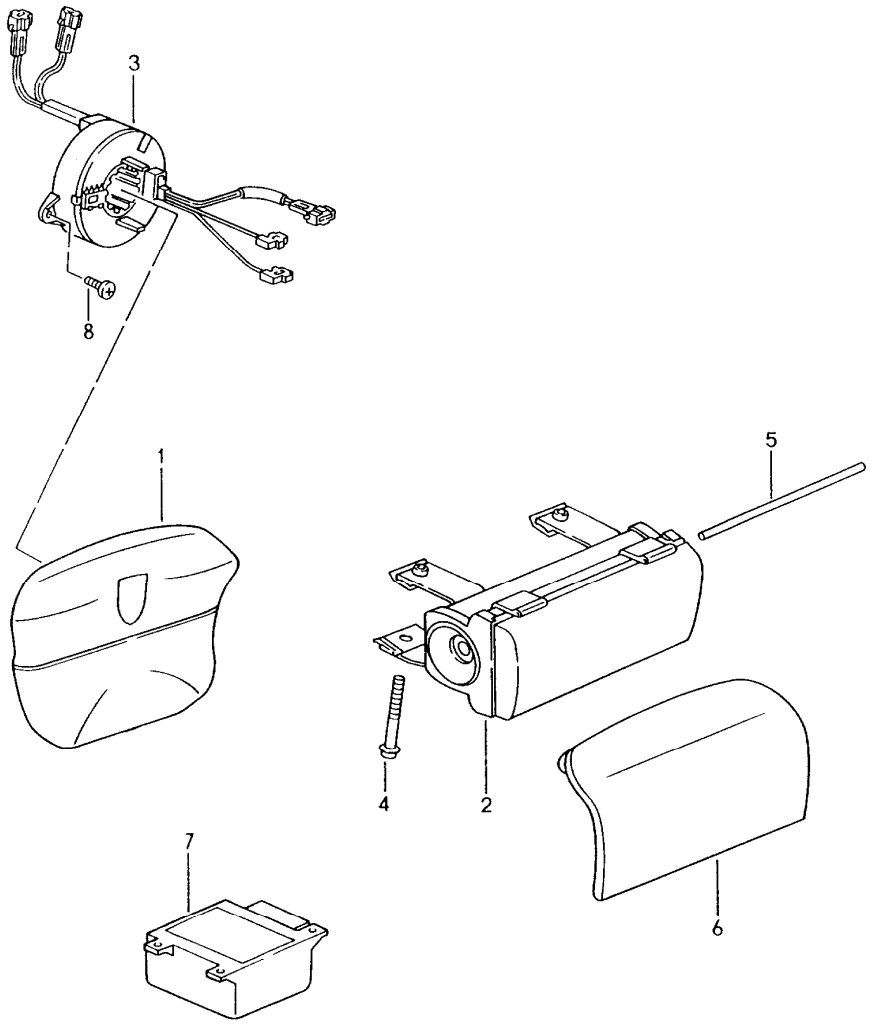


| Pos | Part Number | Description | Remark | Qty | Model |
|---|---|---|---|---|---|
| | | airbag | | | |
| 1 | A 996 803 089 01 | airbag unit<br>four-spoke steering wheel<br>plastic material | | 1 | |
| | 1DB | black | | | |
| (1) | 996 803 089 03 | airbag unit<br>four-spoke steering wheel<br>plastic material | | 1 | |
| | 8YR | black | -00 | | |
| | A28 | black | 01- | | |
| (1) | 996 803 089 02 | airbag unit<br>3-spoke steering wheel<br>plastic material | -99 | 1 | M 436 |
| | 8YR | black | | | |
| (1) | 996 803 089 04 | airbag unit<br>3-spoke steering wheel<br>plastic material | 00 | 1 | M 436 |
| | A08 | black | | | |
| (1) | 996 803 089 02 | airbag unit<br>3-spoke steering wheel<br>plastic material | 01-02 | 1 | M 436 |
| | A28 | black | | | |
| (1) | 996 803 089 02 | airbag unit<br>3-spoke steering wheel<br>plastic material | 03- | 1 | M 436 |
| | A28 | black | | | |
| | C60 | graphite grey | | | |
| | S40 | savanna | | | |
| | G30 | metropole blue | | | |
| | J40 | nephrite green | 03 | | |
| | M40 | boxster red | | | |
| | P20 | cinnamon brown | | | |
| | D11 | dark grey/natural | | | |
| | T11 | brown/natural | | | |

| Pos | Part Number | Description | Remark | Qty | Model |
|---|---|---|---|---|---|
| (1) | 996 803 089 05 | airbag unit<br>3-spoke steering wheel | | 17 | M 091 |
| | 9Q3 | cocoa | | | |
| | D11 | dark grey/natural | | | |
| (1) | 996 803 980 02 | airbag unit<br>four-spoke steering wheel<br>leather<br>crest<br>embossed | 99<br>99-01<br>00-01 | 1 | XNT<br>X26/X77<br>X30 |
| | 8YR | black | 99-00 | | |
| | C50 | graphite grey | 99-00 | | |
| | S30 | savanna | 99-00 | | |
| | G10 | metropole blue | 99-00 | | |
| | J30 | nephrite green | 99-00 | | |
| | M30 | boxster red | 99-00 | | |
| (1) | 996 803 980 01 | airbag unit<br>3-spoke steering wheel<br>leather<br>crest<br>coloured | 98-99<br>98-99 | 1 | XPA/XPD/<br>XPE |
| | 8YR | black | | | |
| | C50 | graphite grey | | | |
| | S30 | savanna | | | |
| | G10 | metropole blue | | | |
| | J30 | nephrite green | | | |
| | M30 | boxster red | | | |
| (1) | 996 803 980 03 | airbag unit<br>3-spoke steering wheel<br>leather<br>crest<br>silver | 00<br>00 | 1 | XPA/XPD/<br>XPC |
| | 8YR | black | | | |
| | C50 | graphite grey | | | |
| | S30 | savanna | | | |
| | G10 | metropole blue | | | |
| | J30 | nephrite green | | | |
| | M30 | boxster red | | | |
| | D11 | dark grey/natural | | | |
| | T11 | brown/natural | | | |
| (1) | 996 803 980 01 | airbag unit<br>3-spoke steering wheel<br>leather<br>crest<br>coloured | 01-<br>01-<br>03- | 1 | XPA/XPD/<br>XPC<br>XPG |
| | A28 | black | | | |
| | C60 | graphite grey | | | |
| | S40 | savanna | | | |
| | G30 | metropole blue | | | |
| | J40 | nephrite green | -03 | | |
| | M40 | boxster red | | | |
| | P20 | cinnamon brown | | | |
| | D11 | dark grey/natural | | | |
| | T11 | brown/natural | | | |
| 2 | A 996 803 071 04 | airbag unit | 97 | 1 | |
| (2) | A 996 803 071 05 | airbag unit | 97 | 1 | |
| (2) | A 996 803 071 06 | airbag unit | 98- | 1 | |
| (2) | A 996 803 071 07 | airbag unit<br>see technical information<br>GR.6 NR.1/03 | -03 | 1 | |
| (2) | 996 803 071 08 | airbag unit<br>see technical information<br>GR.6 NR.1/03 | 03- | 1 | |
| - | 996 803 091 00 | airbag unit | /L 98- | 1 | M 563 |
| - | 996 803 092 00 | airbag unit | /R 98- | 1 | M 563 |
| - | 900 378 222 09 | hexagon-head bolt<br>M 6 X 16 | | 8 | M 563 |
| 3 | 996 652 211 00 | support for contact | | 1<br>1 | M 481<br>M 480 |
| (3) | 996 652 213 00 | support for contact | | 1 | M 249 |

| Pos | Part Number | Description | Remark | Qty | Model |
|---|---|---|---|---|---|
| 4 | 900 378 137 09 | hexagon-head bolt<br>AM 8 X 95 | | 2 | |
| 5 | 996 803 611 00 | hinge pin | | 1 | |
| 6 | A 996 803 173 00 | lid | 97 | 1 | |
| | A10 | black | | | |
| | C50 | graphite grey | | | |
| | S30 | savanna | | | |
| (6) | U 996 803 973 00 | lid | 97 | 1 | |
| | A10 | black | | | |
| | C50 | graphite grey | | | |
| | S30 | savanna | | | |
| (6) | 986 803 973 00 | lid<br>leatherette | 97 | 1 | |
| | A10 | black | | | |
| | C50 | graphite grey | | | |
| | S30 | savanna | | | |
| (6) | 996 803 173 04 | lid<br>leatherette | 98- | 1 | |
| | A18 | black | -99 | | |
| | C18 | graphite grey | -99 | | |
| | S18 | savanna | -99 | | |
| | G18 | metropole blue | -99 | | |
| | S32 | savanna | 00- | | |
| | G12 | metropole blue | 00- | | |
| | A12 | black | 00- | | |
| | C52 | graphite grey | 00- | | |
| | J32 | nephrite green | 01-03 | | |
| (6) | 996 803 173 01 | lid<br>leather | 97 | 1 | |
| | A11 | black | | | |
| | C51 | graphite grey | | | |
| | S31 | savanna | | | |
| | J31 | nephrite green | | | |
| | M31 | boxster red | | | |
| (6) | 996 803 173 05 | lid<br>leather | 98- | 1 | |
| | A11 | black | | | |
| | C51 | graphite grey | | | |
| | G11 | metropole blue | | | |
| | J31 | nephrite green | -03 | | |
| | M31 | boxster red | | | |
| | S31 | savanna | | | |
| | A11 | black | 99- | | M 012 |
| | C51 | graphite grey | 99- | | M 012 |
| | S31 | savanna | 99- | | M 012 |
| | G11 | metropole blue | 99- | | M 012 |
| | J31 | nephrite green | 99-03 | | M 012 |
| | M31 | boxster red | 99- | | M 012 |
| | A11 | black | 00- | | |
| | D12 | dark grey/natural | 00- | | |
| | T12 | brown/natural | 00- | | |
| | P12 | cinnamon brown | 01- | | |
| (6) | 996 803 173 05 | lid | 04 | 1 | M 091 |
| | 9V6 | cocoa | | | |
| | T12 | dark grey/natural | | | |
| 7 | 996 618 217 01 | switch unit | 97 | 1 | |
| - | 944 618 401 00 | nut<br>M 6 | 97 | 2 | |
| - | 900 377 010 09 | hexagon nut<br>M 6 | 97 | 1 | |
| 7 | 996 618 217 01 | switch unit | 98- | 1 | M 562 |

| Pos | Part Number | Description | Remark | Qty | Model |
|---|---|---|---|---|---|
| - | 900 377 010 09 | nut<br>M 6 | 98- | 1 | M 562 |
| - | 999 084 635 02 | shear-off nut<br>M 6 | 98- | 2 | M 562 |
| (7) A | 996 618 219 00 | control unit | | 1 | M 562,563 |
| (7) | 996 618 219 02 | control unit | | 1 | M 562,563 |
| - | 900 377 010 09 | nut<br>M 6 | 98- | 1 | M 562,563 |
| - | 996 618 221 00 | sensor<br>airbag | 98- | 2 | M 563 |
| - | 996 618 221 01 | sensor<br>airbag | 02- | 2 | M 563 |
| - | 999 073 152 09 | oval-head screw<br>M 6 X 18 | 98- | 4 | M 563 |
| 8 | 900 146 024 07 | oval-head screw<br>M 5 X 8 | | 2 | |

| Pos | Part Number | Description | Remark | Qty | Model |
|---|---|---|---|---|---|

| Model | Year | MG | SG | Illustration | Restrictions | UPD | 18:19 | 30.07.2008 | PET |
|---|---|---|---|---|---|---|---|---|---|
| 986 | 2004 | 5 | 01 | 501-00 | | 229 | | | |

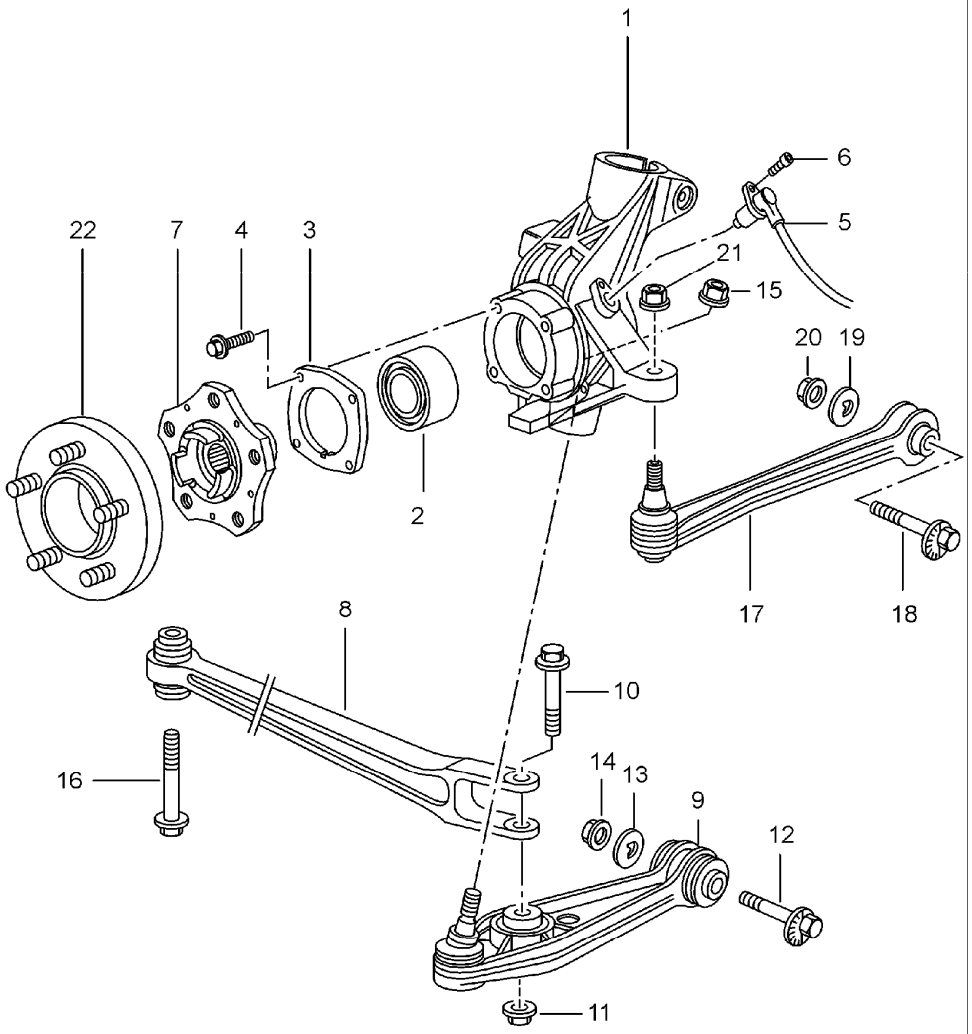


| Pos | Part Number | Description | Remark | Qty | Model |
|---|---|---|---|---|---|
| | | rear axle<br>wheel carrier<br>control arm<br>wheel hub | | | |
| 1 | A 996 341 158 09 | wheel carrier<br>F >>98XS6 01524 | /L | 1 | |
| (1) | A 996 341 158 10 | wheel carrier<br>F 98XS6 01525>><br><br>use also:<br>F >>98XS6 01524<br>986.352.081.04 | /L -00 | 1 | |
| (1) | 996 341 958 12 | wheel carrier | /L | 1 | |
| (1) | 986 331 157 20 | wheel carrier | /L 00- | 1 | M 008 |
| (1) | A 996 341 157 09 | wheel carrier<br>F >>98XS6 01524 | /R | 1 | |
| (1) | A 996 341 157 10 | wheel carrier<br>F 98XS6 01525>><br><br>use also:<br>F >>98XS6 01524<br>986.352.082.04 | /R -00 | 1 | |
| (1) | 996 341 957 12 | wheel carrier | /R | 1 | |
| (1) | 986 331 158 20 | wheel carrier | /R 00- | 1 | M 008 |
| 2 | 999 053 041 02 | angular-contact bearing | -00 | 2 | |
| (2) | 999 053 041 03 | angular-contact bearing | 01- | 2 | |
| (2) | 999 053 042 07 | angular-contact bearing | -01 | 2 | M 008 |
| (2) | 999 053 054 05 | angular-contact bearing | 02- | 2 | M 008 |
| 3 | 964 341 661 01 | lid | | 2 | |
| (3) | 986 331 661 20 | lid | 00- | 2 | M 008 |
| 4 | 999 217 042 09 | hexagon-head bolt<br>M 8 X 35 | | 8 | |
| 5 | 996 606 406 00 | speed sensor | -01 | 2 | |
| (5) | 996 606 406 00 | speed sensor | 01 | 2 | M 476 |
| (5) | 996 606 407 02 | speed sensor | 02- | 2 | |
| (5) | 996 606 406 00 | speed sensor | 02- | 2 | M 476 |

| Pos | Part Number | Description | Remark | Qty | Model |
|---|---|---|---|---|---|
| - | 964 094 400 99 | spacer<br>for<br>speed sensor<br>see technical information<br>group 4<br>NR.1/97 | | X | |
| 6 | 900 067 117 09 | pan-head screw<br>M 6 X 16 | | 2 | |
| 7 | 996 341 605 54 | wheel hub | | 2 | |
| 7 | 986 331 605 20 | wheel hub | 00- | 2 | M 008 |
| 8 | A 986 331 043 04 | control arm | -01 | 2 | |
| (8) | A 986 331 043 05 | control arm | 02 | 2 | |
| (8) | A 986 331 043 06 | control arm | 03- | 2 | |
| (8) | 986 331 043 07 | control arm | 04 | 2 | |
| 9 | 996 341 053 05 | wishbone | | 2 | |
| (9) | A 996 341 053 06 | wishbone | 97 | 2 | |
| (9) | A 996 341 053 07 | wishbone | -03 | 2 | |
| (9) | 996 341 053 16 | wishbone | 04- | 2 | |
| 10 | 900 378 135 09 | hexagon-head bolt<br>M 14 X 1,5 X 75 | | 2 | |
| 11 | 900 380 012 09 | hexagon nut<br>M 14 X 1,5 | | 2 | |
| 12 | 996 331 217 03 | eccentric screw<br>M 12 X 100<br>F >>98XS6 01535 | | 2 | |
| (12) | 996 331 217 04 | eccentric screw<br>M 12 X 105<br>F 98XS6 01536>> | | 2 | |
| 13 | 996 331 219 00 | eccentric washer | | 2 | |
| 14 | 999 084 445 09 | hexagon nut<br>M 12 X 1,5 | | 4 | |
| 15 | 999 084 449 09 | hexagon nut<br>M 12 X 1,5 | | 2 | |
| 16 | A 900 378 160 09 | hexagon-head bolt<br>M 14 X 1,5 X 90 | | 2 | |
| (16) | 900 378 199 09 | hexagon-head bolt<br>M 14 X 1,5 X 90 | | 2 | |
| - | 986 331 023 00 | nut lock | | 2 | |
| 17 | A 996 331 045 06 | track rod<br>F >>98WS6 01168 | | 2 | |
| (17) | A 996 331 045 07 | track rod | | 2 | |
| (17) | A 996 331 045 08 | track rod<br>F 98WS6 01169>> | | 2 | |
| (17) | 996 331 045 12 | track rod | 00- | 2 | |
| (17) | 996 331 045 12 | track rod | 00- | 2 | M 008 |
| 18 | 996 331 217 02 | eccentric screw<br>M 12 X 83 | | 2 | |
| 19 | 996 331 219 00 | eccentric washer | | 2 | |
| 20 | 999 084 445 09 | hexagon nut<br>M 12 X 1,5 | | 2 | |
| 21 | 999 084 449 09 | hexagon nut<br>M 12 X 1,5 | | 2 | |
| 22 | 996 361 617 00 | spacer ring<br>17 MM<br>with<br>wheel bolt | 01- | 2 | XRN |
| (22) | 997 361 605 90 | spacer ring | 01- | 2 | XRP |
| (22) | 996 361 605 90 | spacer ring<br>5 MM<br>see technical information<br>group 4<br>NR.1/04<br>NR.2/04 | 04 | 2 | M 091 |

| Model | Year | MG | SG | Illustration | Restrictions | UPD | 18:19 | 30.07.2008 |
|---|---|---|---|---|---|---|---|---|
| 986 | 2004 | 5 | 01 | 501-01 | | 229 | | |

PORSCHE PET PORSCHE

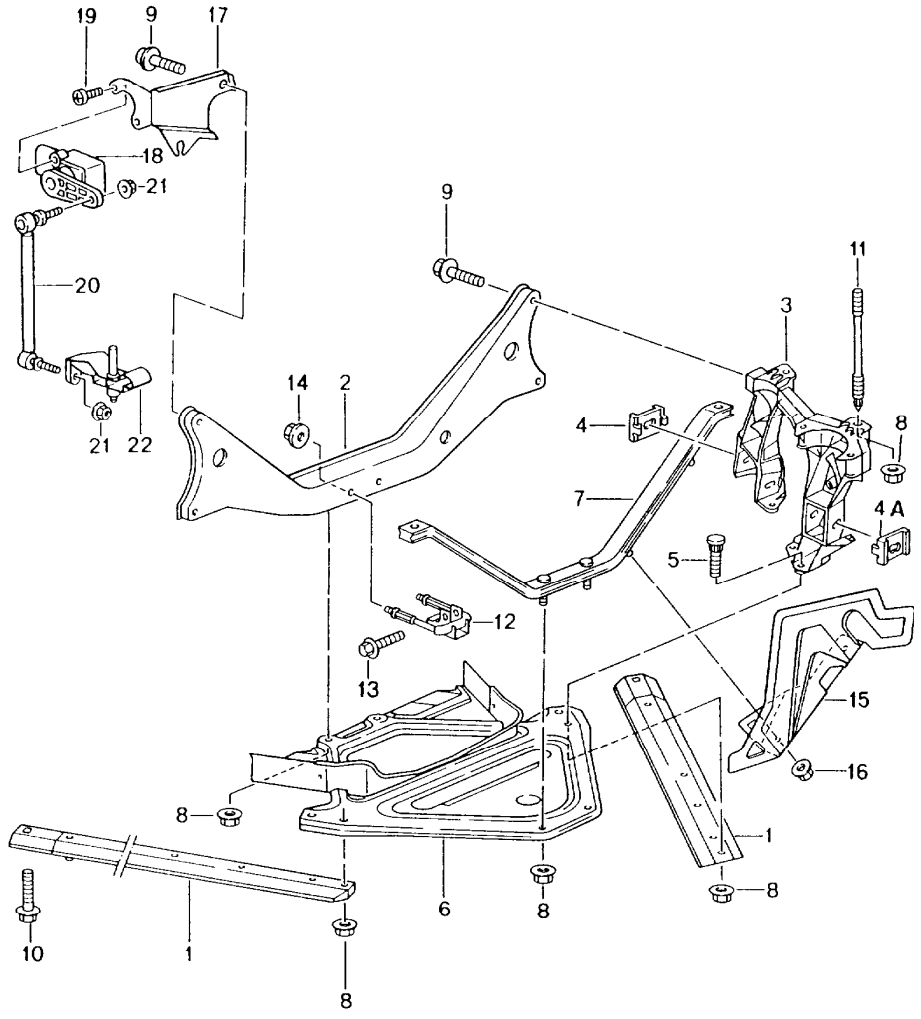


| Pos | Part Number | Description | Remark | Qty | Model |
|---|---|---|---|---|---|
| | | rear axle<br>side section<br>bracket | | | |
| 1 | 986 331 080 03 | strut | 97 | 2 | |
| (1) | 986 331 031 00 | strut | /L 98- | 1 | |
| (1) | 986 331 032 00 | strut | /R 98- | 1 | |
| 2 A | 986 331 071 07 | cross member | | 1 | |
| (2) A | 986 331 071 09 | cross member | -03 | 1 | |
| (2) | 986 331 071 10 | cross member | 04- | 1 | |
| - | 999 072 024 09 | hexagon-head bolt<br>M 10 X 25<br>cross member<br>bracket | | 2 | |
| 3 | 986 331 051 06 | side section<br>F >>98XS6 01535 | /L | 1 | |
| (3) | 986 331 051 08 | side section<br>F 98XS6 01536>> | /L | 1 | |
| | | use also:<br>F >>98XS6 01535<br>999.072.037.09<br>996.331.217.04 | | <br>1<br>1 | |
| (3) | 986 331 052 06 | side section<br>F >>98XS6 01535 | /R | 1 | |
| (3) | 986 331 052 08 | side section<br>F 98XS6 01536>> | /R | 1 | |
| | | use also:<br>F >>98XS6 01535<br>999.072.037.09<br>996.331.217.04 | | <br>1<br>1 | |
| 4 | 986 331 351 01 | clip | | 2 | |
| 4A | 986 331 351 03 | clip | | 4 | |
| 5 | 999 080 031 09 | screw | | 8 | |
| 6 A | 986 331 161 00 | bracket | 97 | 1 | |
| (6) | 986 331 161 03 | bracket | -99 | 1 | |
| (6) | 986 331 161 04 | bracket | 00- | 1 | M 249 |
| (6) | 986 331 163 00 | bracket | 00-<br>00- | 1 | M 480<br>M 481 |

| Pos | Part Number | Description | Remark | Qty | Model |
|---|---|---|---|---|---|
| - | 986 331 361 02 | spoiler | -00 | 2 | |
| - | 986 331 361 03 | spoiler | 01- | 2 | |
| - | 999 507 774 40 | push button<br>A 3,9 | 01- | 2 | |
| - | 999 507 775 40 | push button<br>B 3,9 | 01- | 2 | |
| 7 | 986 331 093 03 | strut | | 1 | M 249 |
| (7) | 986 331 093 03 | strut<br>F >>98VS6 06499 | | 1 | M 481 |
| (7) | 986 331 093 04 | strut<br>F 98VS6 06500>> | | 1 | M 481 |
| - | 999 072 032 09 | hexagon-head bolt<br>M 10 X 75<br>POS.7<br>threaded joint<br>body | | 2 | |
| 8 | 999 076 053 09 | hexagon nut<br>M 10 | | 14 | |
| 9 | 999 072 023 09 | hexagon-head bolt<br>M 10 X 45<br>F >>98XS6 01535 | | 4 | |
| (9) | 999 072 037 09 | hexagon-head bolt<br>M 10 X 45<br>F 98XS6 01536>> | | 4 | |
| - | 999 076 058 09 | nut<br>M 10 | | 4 | |
| 10 | 999 072 031 09 | hexagon-head bolt<br>M 10 X 45 | | 2 | |
| 11 | 999 061 108 09 | stud<br>M 10 X 119 | | 4 | |
| 12 | 986 331 181 01 | restraining cable | | 1 | |
| 13 | 900 378 107 09 | hexagon-head bolt<br>M 8 X 45 | | 1 | |
| 14 | 900 380 005 09 | hexagon nut<br>M 8 | | 2 | |
| 15 | 986 331 098 00 | heat shield<br>F 98VS6 06500>> | | 1 | M 481 |
| 16 | 900 380 015 09 | lock nut<br>M 6<br>F 98VS6 06500>> | | 2 | M 481 |
| 17 | 986 331 611 02 | support | -99 | 2 | M 601 |
| (17) | 986 331 611 03 | support | 00- | 1 | M 601 |
| 18 | 996 631 121 00 | sensor | 99- | 1 | M 601 |
| 19 | N 014 129 12 | oval-head screw<br>M 5 X 10 | 99- | 2 | M 601 |
| 20 | 996 331 375 01 | strut | 99- | 1 | M 601 |
| 21 | 900 380 015 09 | hexagon nut<br>VM 6 | 99- | 2 | M 601 |
| 22 | 996 341 371 03 | support | 99- | 1 | M 601 |

| Model | Year | MG | SG | Illustration | Restrictions | UPD | 18:20 | 30.07.2008 | PET |
|---|---|---|---|---|---|---|---|---|---|
| 986 | 2004 | 5 | 01 | 501-03 | | 229 | | | |

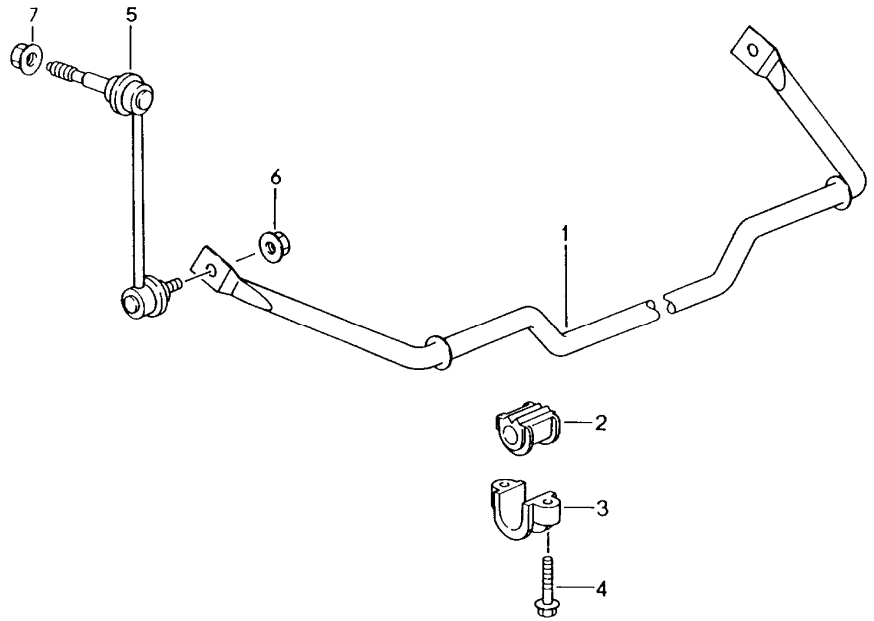


| Pos | Part Number | Description | Remark | Qty | Model |
|---|---|---|---|---|---|
| | | stabiliser | | | |
| 1 | 986 333 701 10 | stabiliser | -02 | 1 | |
| (1) | 986 333 701 11 | stabiliser | -02 | 1 | M 009/030 |
| (1) | 986 333 701 13 | stabiliser | -02 | 1 | M 008/030 |
| (1) | 986 333 701 10 | stabiliser | -04 | 1 | M 009 |
| (1) | 986 333 701 11 | stabiliser | -04<br>-04 | 1<br>1 | M 009/030<br>M 008<br>M 480/030 |
| (1) | 986 333 701 13 | stabiliser | -04<br>-04 | 1<br>1 | M 008<br>M 249/030<br>M 008/480 |
| (1) | 986 333 701 10 | stabiliser | -04 | 1 | M 008/249 |
| (2) | 996 333 792 24 | stabiliser mounting<br>18,7 MM | -02 | 2 | M 009 |
| (2) | 996 333 792 25 | stabiliser mounting<br>19,8 MM | -02 | 2 | M 009/030 |
| (2) | 996 333 792 28 | stabiliser mounting<br>19,2 MM | -02 | 2 | M 008 |
| (2) | 996 333 792 25 | stabiliser mounting<br>19,8 MM | -02 | 2 | M 008/030 |
| (2) | 996 333 792 24 | stabiliser mounting<br>18,7 MM | 03- | 2 | M 009 |
| (2) | 996 333 792 25 | stabiliser mounting<br>19,8 MM | 03- | 2 | M 009/030 |
| (2) | 996 333 792 28 | stabiliser mounting<br>19,2 MM | 03- | 2 | M 008/480 |
| (2) | 996 333 792 24 | stabiliser mounting<br>18,7 MM | 03- | 2 | M 008/249 |
| (2) | 996 333 792 25 | stabiliser mounting<br>19,8 MM | 03- | 2 | M 008<br>M 480/030 |
| (2) | 996 333 792 28 | stabiliser mounting<br>19,2 MM | 03- | 2 | M 008<br>M 249/030 |
| 3 | 996 333 777 01 | bearing clamp | | 2 | |
| 4 | 900 378 055 09 | hexagon-head bolt<br>AM 8 X 40 | | 4 | |
| 5 | 996 343 069 02 | stabiliser mounting | /L -99 | 1 | |

| Pos | Part Number | Description | Remark | Qty | Model |
|---|---|---|---|---|---|
| (5) | 996 343 069 03 | stabiliser mounting | /L 00- | 1 | |
| (5) | 996 343 070 02 | stabiliser mounting | /R -99 | 1 | |
| (5) | 996 343 070 03 | stabiliser mounting | /R 00- | 1 | |
| 6 | 999 084 643 09 | hexagon nut<br>M 10 | | 2 | |
| 7 | 999 084 445 09 | hexagon nut<br>M 12 | | 2 | |

| Pos | Part Number | Description | Remark | Qty | Model |
|---|---|---|---|---|---|

| Model | Year | MG | SG | Illustration | Restrictions | UPD | 18:20 | 30.07.2008 | PET |
|---|---|---|---|---|---|---|---|---|---|
| 986 | 2004 | 5 | 01 | 501-05 | | 229 | | | |

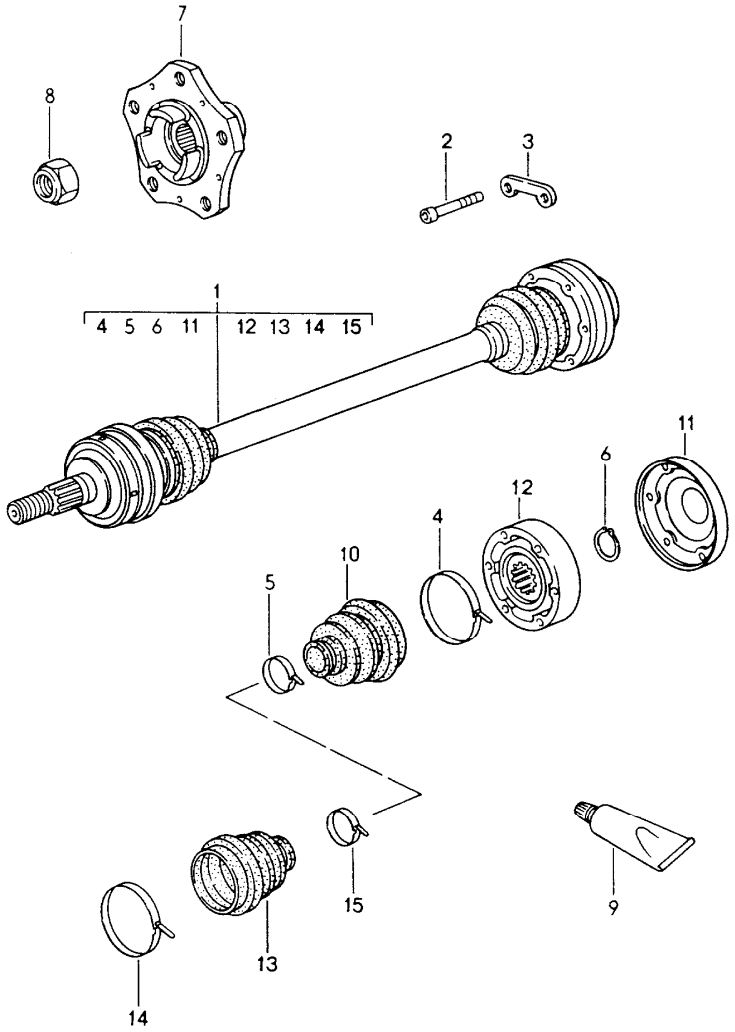


| Pos | Part Number | Description | Remark | Qty | Model |
|---|---|---|---|---|---|
| | | drive shaft<br>wheel hub | -02 | | |
| 1 | 986 332 024 05 | drive shaft | -98 | 2 | M 249 |
| (1) | 986 332 024 08 | drive shaft | 99- | 2 | M 249 |
| (1) | 986 332 024 04 | drive shaft | /L -98 | 1 | M 481 |
| (1) | 986 332 024 07 | drive shaft | /L 99- | 1 | M 481 |
| (1) | 986 332 024 03 | drive shaft | /R -98 | 1 | M 481 |
| (1) | 986 332 024 06 | drive shaft | /R 99- | 1 | M 481 |
| (1) | 986 332 024 50 | drive shaft | 00- | 2 | M 008/480 |
| (1) | 986 332 024 51 | drive shaft | 00- | 2 | M 008/249 |
| 2 | 900 067 211 09 | pan-head screw<br>M 8 X 50 | | 12 | |
| (2) | 900 067 123 09 | pan-head screw<br>M 10 X 50 | 00- | 12 | M 008 |
| 3 | 993 349 191 00 | plate | | 6 | |
| (3) | 996 332 191 00 | plate | | 6 | M 008 |
| 4 | 911 332 257 00 | clip<br>$ 73 MM | | 2 | |
| 5 | 928 332 257 01 | clip<br>$ 34 MM | | 2 | |
| 6 | 900 041 013 01 | circlip | | 2 | |
| (6) | 900 041 014 00 | circlip | 00- | 2 | M 008 |
| 7 | 996 341 605 54 | wheel hub | | 2 | |
| (7) | 986 331 605 20 | wheel hub | 00- | 2 | M 008 |
| 8 | 999 084 641 02 | lock nut<br>M 22 X 1,5 | -01 | 2 | |
| (8) | 999 084 641 02 | lock nut<br>M 22 X 1,5 | 02 | 2 | |
| 9 | 000 043 110 01 | grease for drive shaft<br>1 100-gramme tube | | X | |
| (9) | 000 043 205 36 | sealing compound<br>drive shaft<br>1 100-gramme tube | | X | |
| 10 | 928 332 293 02 | dust bellows | | 2 | |

| Pos | Part Number | Description | Remark | Qty | Model |
|---|---|---|---|---|---|
| - | 951 332 259 00 | bellow support<br>for<br>dust bellows<br>for<br>drive shaft<br>986.332.024.03/04/05<br>986.332.024.06/07/08 | | 2 | |
| - | 911 332 259 01 | bellow support<br>for<br>dust bellows<br>for<br>drive shaft<br>986.332.024.50/51 | | 2 | M 008 |
| 11 | 964 332 267 00 | lid | -99 | 2 | |
| (11) | 928 332 267 01 | lid | 00- | 2 | M 008 |
| 12 | 951 332 030 00 | joint | -02 | 2 | |
| (12) | 911 332 030 01 | joint | 00- | 2 | M 008 |
| 13 | 928 332 293 02 | dust bellows | | 2 | |
| 14 | 911 332 257 00 | clip | | 2 | |
| 15 | 928 332 257 01 | clip | | 2 | |

| Pos | Part Number | Description | Remark | Qty | Model |
|---|---|---|---|---|---|

| Model | Year | MG | SG | Illustration | Restrictions | UPD | 18:20 | 30.07.2008 | PORSCHE | PET | PORSCHE |
|---|---|---|---|---|---|---|---|---|---|---|---|
| 986 | 2004 | 5 | 01 | 501-06 | | 229 | | | | | |

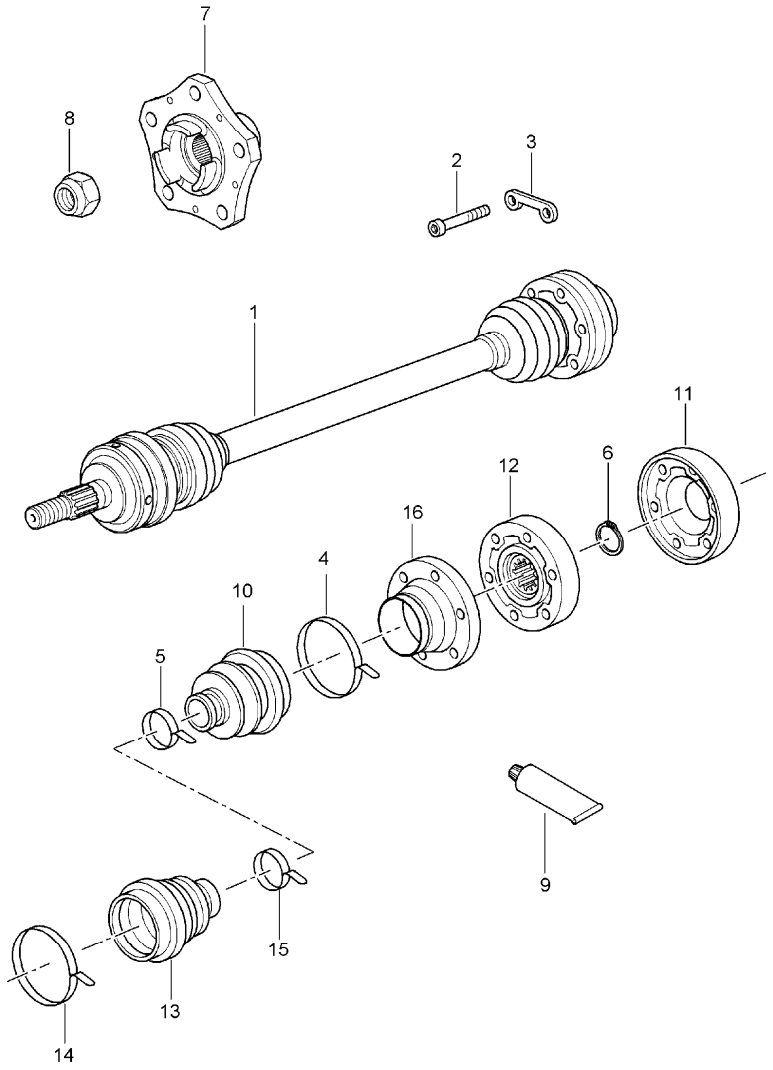


| Pos | Part Number | Description | Remark | Qty | Model |
|---|---|---|---|---|---|
| | | drive shaft<br>wheel hub | 03- | | |
| 1 | 986 332 024 09 | drive shaft | /L | 1 | M 481 |
| (1) | 986 332 024 10 | drive shaft | /R | 1 | M 481 |
| (1) | 986 332 024 11 | drive shaft | | 2 | M 009/249 |
| (1) | 986 332 024 50 | drive shaft | | 2 | M 008/480 |
| (1) | 986 332 024 51 | drive shaft | | 2 | M 008/249 |
| (2) | 986 332 190 00 | pan-head screw<br>M 8<br>F >>983S6 00191<br>F >>983U6 03154 | | 12 | M 481 |
| 2 | N 909 417 01 | pan-head screw<br>M 10 X 45<br>F 983S6 00192>><br>F 983U6 03155>> | | 12 | M 481 |
| (2) | 986 332 190 00 | pan-head screw<br>M 8<br>F 983U6 03186>><br>F >>983U6 03188<br>F 983U6 03192>><br>F >>983U6 03196<br>F 983U6 03198>><br>F >>983U6 03199<br>F 983U6 03201>><br>F >>983U6 03206 | | 12 | M 481 |
| (2) | 986 332 190 00 | pan-head screw<br>M 8 | | 12 | M 009/249 |
| (2) | 900 067 229 09 | pan-head screw<br>M 10 X 48 | | 12 | M 008 |
| 3 | 986 332 191 00 | plate | | 6 | M 481 |
| (3) | 986 332 191 00 | plate | | 6 | M 009/249 |
| (3) | 996 332 191 00 | plate | | 6 | M 008 |
| 4 | 996 332 957 00 | clip | | 1 | M 009 |
| (4) | 911 332 257 00 | clip | | 1 | M 008 |
| 5 | 996 332 257 00 | clip | | 1 | M 009 |
| (5) | 928 332 257 01 | clip | | 1 | M 008 |
| 6 | 900 041 013 01 | circlip | | 1 | |
| 7 | 996 341 605 54 | wheel hub | | 2 | M 481 |

| Pos | Part Number | Description | Remark | Qty | Model |
|---|---|---|---|---|---|
| (7) | 986 331 605 20 | wheel hub | | 2 | M 008 |
| 8 | 999 084 641 02 | lock nut<br>M 22 X 1,5 | -03 | 2 | |
| (8) | 999 084 641 02 | lock nut<br>M 22 X 1,5 | 04- | 2 | |
| 9 | 000 043 110 00 | grease<br>1 100-gramme tube | | X | |
| (9) | 000 043 205 36 | sealing compound<br>drive shaft<br>1 100-gramme tube | | X | |
| 10 | 996 332 293 00 | dust bellows | | 2 | M 009 |
| (10) | 928 332 293 02 | dust bellows | | 2 | M 008/249 |
| (10) | 986 332 293 00 | dust bellows | | 2 | M 008/480 |
| 11 | 986 332 267 00 | lid | | 2 | M 009 |
| (11) | 928 332 267 01 | lid | | 2 | M 008 |
| 12 | 986 332 030 00 | joint | | 2 | M 009 |
| (12) | 911 332 030 01 | joint | | 2 | M 008 |
| 13 | 996 332 293 00 | dust bellows | | 2 | M 009 |
| (13) | 928 332 293 02 | dust bellows | | 2 | M 008 |
| 14 | 996 332 957 00 | clip | | 2 | M 009 |
| (14) | 911 332 257 00 | clip | | 1 | M 008 |
| 15 | 996 332 257 00 | clip<br>$ 41,5 MM | | 1 | M 009 |
| (15) | 928 332 257 01 | clip | | 1 | M 008 |
| 16 | 986 332 259 00 | bellow support | | X | M 009 |
| (16) | 996 332 259 00 | bellow support | | X | M 008 |

| Pos | Part Number | Description | Remark | Qty | Model |
|---|---|---|---|---|---|

| Model | Year | MG | SG | Illustration | Restrictions | UPD | 18:20 | 30.07.2008 | PET |
|---|---|---|---|---|---|---|---|---|---|
| 986 | 2004 | 5 | 02 | 502-00 | | 229 | | | |

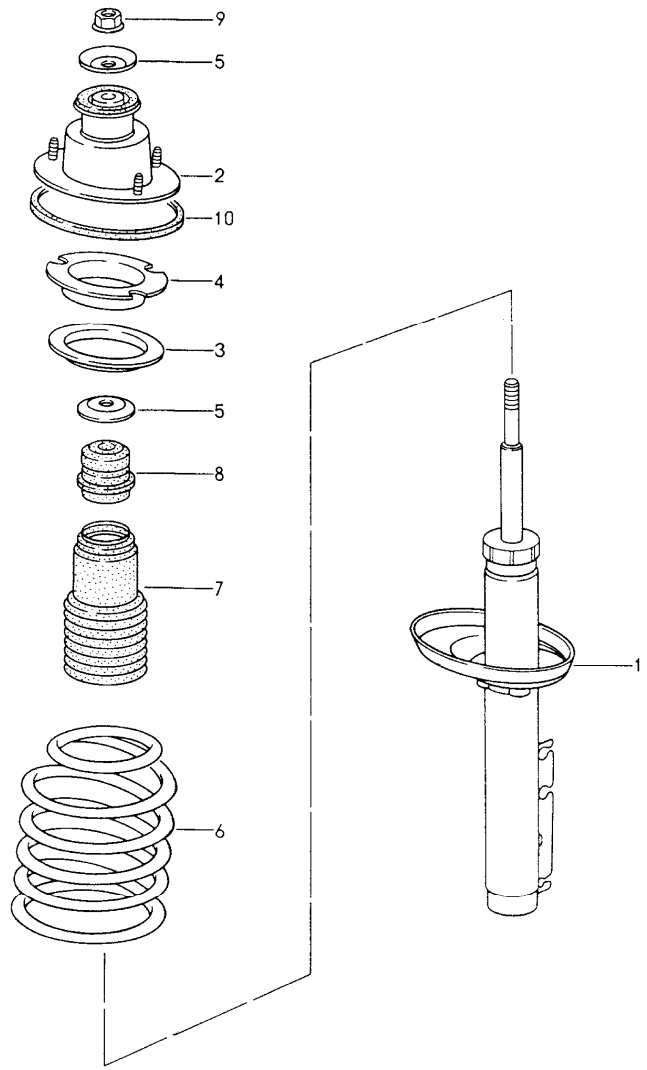


| Pos | Part Number | Description | Remark | Qty | Model |
|---|---|---|---|---|---|
| | | shock absorber<br>coil spring | | | |
| 1 | A 986 333 051 04 | shock absorber<br>- bilstein - | | 2 | |
| (1) | 986 333 051 06 | shock absorber<br>- bilstein - | -99 | 2 | |
| (1) | 986 333 051 20 | shock absorber<br>- bilstein - | 00- | 2 | |
| (1) | A 986 333 051 14 | shock absorber<br>- bilstein - | | 2 | M 030 |
| (1) | 986 333 051 18 | shock absorber<br>- bilstein - | -99 | 2 | M 030 |
| (1) | 986 333 051 30 | shock absorber<br>- bilstein - | 00- | 2 | M 030 |
| | | mount<br>shock absorber | | | |
| - | 900 378 138 09 | hexagon-head bolt<br>M 12 X 1,5 X 70 | | 2 | |
| - | 999 084 445 09 | hexagon nut<br>M 12 X 1,5 | | 2 | |
| 2 | A 986 333 059 03 | supporting mount | | 2 | |
| (2) | 986 333 059 04 | supporting mount | -02 | 2 | |
| (2) | 986 333 059 06 | supporting mount | 03- | 2 | |
| - | 900 380 005 09 | hexagon nut<br>M 8 | | 6 | |
| - | 803 803 583 | lid | | 2 | |
| 3 | 986 333 504 02 | compensating plate<br>3,0 MM | | X | |
| (3) | 986 333 504 03 | compensating plate<br>6,0 MM | | X | |
| 4 | 986 333 509 02 | ring | | 2 | |
| 5 | 996 343 107 02 | stop plate | -99 | 4 | |
| (5) | 996 343 107 03 | stop plate | 00- | 4 | |
| 6 | 986 333 531 04 | coil spring<br>1 set | -02 | 1 | M 481 |

| Pos | Part Number | Description | Remark | Qty | Model |
|---|---|---|---|---|---|
| | 504 | identification<br>blue<br>yellow | | | |
| (6) | 986 333 531 34 | coil spring<br>1 set | 03- | 1 | M 481 |
| | 504 | identification<br>blue<br>yellow | | | |
| (6) | 986 333 531 05 | coil spring<br>1 set | -02 | 1 | M 249 |
| | 504 | identification<br>blue<br>white | | | |
| (6) | 986 333 531 35 | coil spring<br>1 set | 03- | 1 | M 249 |
| | 504 | identification<br>blue<br>white | | | |
| (6) | 986 333 531 11 | coil spring<br>1 set | -02 | 1 | M 481/030 |
| | 504 | identification<br>red<br>red | | | |
| (6) | 986 333 531 42 | coil spring<br>1 set | 03- | 1 | M 481/030 |
| | 504 | identification<br>red<br>red | | | |
| (6) | 986 333 531 12 | coil spring<br>1 set | -02 | 1 | M 249/030 |
| | 504 | identification<br>red<br>yellow | | | |
| (6) | 986 333 531 43 | coil spring<br>1 set | 03- | 1 | M 249/030 |
| | 504 | identification<br>red<br>yellow | | | |
| (6) | 986 333 531 20 | coil spring<br>1 set | -02 | 1 | M 008/480 |

| Pos | Part Number | Description | Remark | Qty | Model |
|---|---|---|---|---|---|
| | 504 | identification<br>violet<br>yellow | | | |
| (6) | 986 333 531 38 | coil spring<br>1 set | 03- | 1 | M 008/480 |
| | 504 | identification<br>violet<br>yellow | | | |
| (6) | 986 333 531 21 | coil spring<br>1 set | -02 | 1 | M 008/249 |
| | 504 | identification<br>violet<br>white | | | |
| (6) | 986 333 531 39 | coil spring<br>1 set | 03- | 1 | M 008/249 |
| | 504 | identification<br>violet<br>white | | | |
| (6) | 986 333 531 30 | coil spring<br>1 set | -02 | 1 | M 008/030<br>M 480 |
| | 504 | identification<br>silver<br>red | | | |
| (6) | 986 333 531 44 | coil spring<br>1 set | 03- | 1 | M 008/030<br>M 480 |
| | 504 | identification<br>silver<br>red | | | |
| (6) | 986 333 531 31 | coil spring<br>1 set | -02 | 1 | M 008/030<br>M 249 |
| | 504 | identification<br>silver<br>yellow | | | |
| (6) | 986 333 531 45 | coil spring<br>1 set | 03- | 1 | M 008/030<br>M 249 |
| | 504 | identification<br>silver<br>yellow | | | |
| 7 | 986 333 505 01 | bellows | | 1 | |
| 8 | 986 333 301 01 | additional spring | | 1 | |

| Pos | Part Number | Description | Remark | Qty | Model |
|---|---|---|---|---|---|
| 9 | 900 380 012 09 | hexagon nut<br>M 14 X 1,5 | | 2 | |
| 10 | 986 333 285 01 | sealing ring | | 2 | |

| Model | Year | MG | SG | Illustration | Restrictions | UPD | 18:21 | 30.07.2008 | PET |
|---|---|---|---|---|---|---|---|---|---|
| 986 | 2004 | 6 | 01 | 601-00 | | 229 | | | |

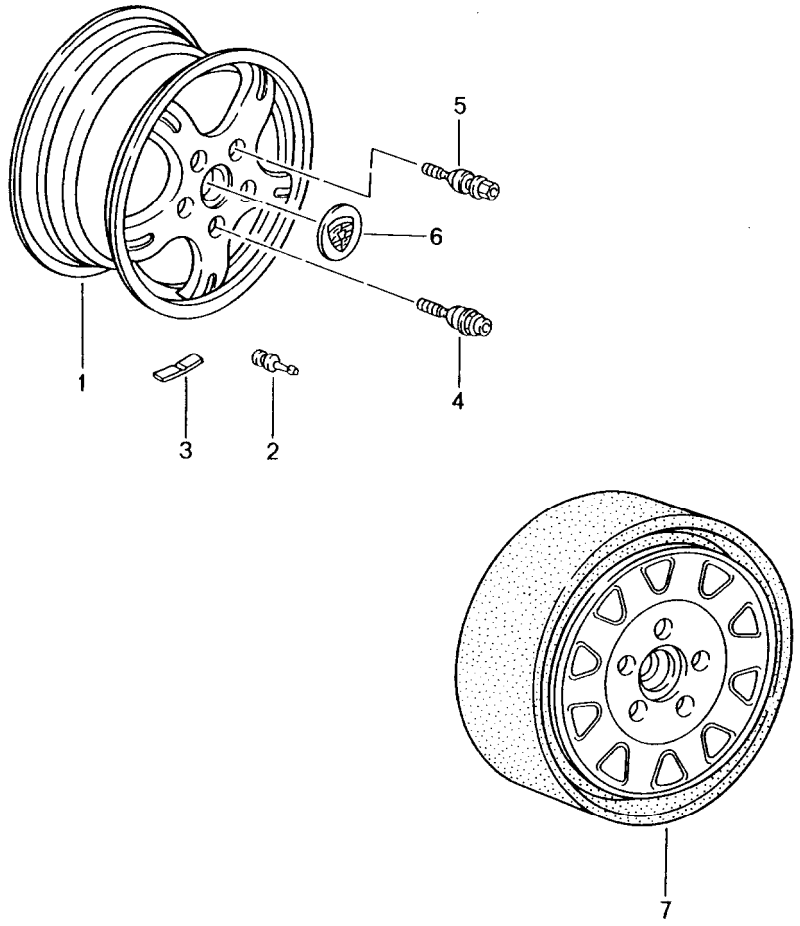


| Pos | Part Number | Description | Remark | Qty | Model |
|---|---|---|---|---|---|
| | | wheels<br><br>see technical information<br>group 4<br>NR.1/04<br>NR.2/04 | | | |
| 1 | 996 362 112 00 | disc wheel<br>6 J X 16<br>ET 50 | /V | 2 | M 395 |
| (1) | 996 362 112 00 | disc wheel<br>6 J X 16<br>ET 50<br>for winter use | /V | 2 | M 008/009 |
| (1) | 996 362 124 00 | disc wheel<br>7 J X 17<br>ET 55 | /V | 2 | M 396 |
| (1) | 986 362 124 00 | disc wheel<br>7 J X 17<br>ET 55 | /V 00- | 2 | M 400 |
| (1) | 993 362 134 06 | disc wheel<br>7,5 X 18<br>ET 50 | /V 99- | 2 | M 413 |
| (1) | 986 362 124 01 | disc wheel<br>7 J X 17<br>ET 55 | /V 01- | 2 | M 391 |
| (1) | 993 362 124 51 | disc wheel<br>7 J X 17<br>ET 55 | /V 01- | 2 | XRA |
| (1) | 993 362 134 08 | disc wheel<br>7,5 J X 18<br>ET 50 | /V 01- | 2 | M 414 |
| (1) | 996 362 136 51 | disc wheel<br>8 J X 18<br>ET50 | /V 02- | 2 | XRC |
| (1) | 996 362 134 05 | disc wheel<br>7,5 J X 18<br>ET 50 | /V 03- | 2 | M 411 |
| (1) | 986 362 124 02 | disc wheel<br>7 J X 17<br>ET 55 | /V 03- | 2 | M 394 |
| (1) | 996 362 134 06 | disc wheel<br>7,5 J X 18<br>ET50 | /V 03- | 2 | M 415 |

| Pos | Part Number | Description | Remark | Qty | Model |
|---|---|---|---|---|---|
| (1) | 996 362 134 05 | disc wheel<br>7,5 J X 18<br>ET 50<br>it is necessary to rework<br>paint | /V 04 | 2 | M 091/191 |
| (1) | 996 362 114 00 | disc wheel<br>7 J X 16<br>ET 40 | /H | 2 | M 395 |
| (1) | 996 362 114 00 | disc wheel<br>7 J X 16<br>ET 40<br>for winter use | /H | 2 | M 008/009 |
| (1) | 996 362 126 05 | disc wheel<br>8,5 J X 17<br>ET 50 | /H | 2 | M 396 |
| (1) | 986 362 126 05 | disc wheel<br>8,5 J X 17<br>ET 50 | /H 00- | 2 | M 400 |
| (1) | 993 362 138 01 | disc wheel<br>9 J X 18<br>ET 52 | /H 99- | 2 | M 413 |
| (1) | 986 362 126 06 | disc wheel<br>8,5 J X 17<br>ET 48 | /H 01- | 2 | M 391 |
| (1) | 993 362 138 08 | disc wheel<br>9 J X 18<br>ET 52 | /H 01- | 2 | M 414 |
| (1) | 993 362 126 55 | disc wheel<br>8,5 X 17<br>ET 50 | /H 01- | 2 | XRA |
| (1) | 996 362 140 51 | disc wheel<br>10 J X 18<br>ET 47<br>use also:<br>999.651.230.02 | /H 02-03 | 2<br>2 | XRC |
| (1) | 996 362 138 00 | disc wheel<br>9 J X 18<br>ET 52 | /H 03- | 2 | M 411 |
| (1) | 986 362 126 07 | disc wheel<br>8,5 J X 17<br>ET 48 | /H 03- | 2 | M 394 |
| (1) | 996 362 138 01 | disc wheel<br>9 J X 18<br>ET 52 | /H 03- | 2 | M 415 |
| (1) | 996 362 138 00 | disc wheel<br>9 J X 18<br>ET 52<br>it is necessary to rework<br>paint | /H 04 | 2 | M 091/191 |
| (1) | 996 362 140 52 | disc wheel<br>10 J X 18<br>ET 47<br>use also:<br>999.651.230.02 | /H 04- | 2<br>2 | XRC |
| 2 | 900 265 001 50 | valve<br>rubber | | 4 | |
| (2) | 993 361 073 00 | valve<br>steel | 02- | 4 | XRC |
| 3 | 901 361 410 50 | balance stick-on weight<br>5 G. | -03 | X | |
| (3) | 1K0 601 178 C | balance stick-on weight<br>5 G. | 04- | X | |
| (3) | 901 361 410 00 | balance stick-on weight<br>10 G. | -03 | X | |
| (3) | 1K0 601 179 C | balance stick-on weight<br>10 G. | 04- | X | |
| (3) | 901 361 411 50 | balance stick-on weight<br>15 G. | -03 | X | |
| (3) | 1K0 601 181 C | balance stick-on weight<br>15 G. | 04- | X | |
| (3) | 901 361 411 00 | balance stick-on weight<br>20 G. | -03 | X | |
| (3) | 1K0 601 182 C | balance stick-on weight<br>20 G. | 04- | X | |
| (3) | 901 361 412 50 | balance stick-on weight<br>25 G. | -03 | X | |
| (3) | 1K0 601 183 C | balance stick-on weight<br>25 G. | 04- | X | |
| (3) | 901 361 412 00 | balance stick-on weight<br>30 G. | -03 | X | |
| (3) | 1K0 601 184 C | balance stick-on weight<br>30 G. | 04- | X | |
| (3) | 901 361 413 50 | balance stick-on weight<br>35 G. | -03 | X | |

| Pos | Part Number | Description | Remark | Qty | Model |
|---|---|---|---|---|---|
| (3) | 1K0 601 185 C | balance stick-on weight<br>35 G. | 04- | X | |
| (3) | 901 361 413 00 | balance stick-on weight<br>40 G. | -03 | X | |
| (3) | 1K0 601 186 C | balance stick-on weight<br>40 G. | 04- | X | |
| (3) | 901 361 414 50 | balance stick-on weight<br>45 G. | -03 | X | |
| (3) | 1K0 601 187 C | balance stick-on weight<br>45 G. | 04- | X | |
| (3) | 901 361 414 00 | balance stick-on weight<br>50 G. | -03 | X | |
| (3) | 1K0 601 188 C | balance stick-on weight<br>50 G. | 04- | X | |
| (3) | 901 361 415 50 | balance stick-on weight<br>55 G. | -03 | X | |
| (3) | 1K0 601 189 C | balance stick-on weight<br>55 G. | 04- | X | |
| (3) | 901 361 415 00 | balance stick-on weight<br>60 G. | -03 | X | |
| (3) | 1K0 601 190 C | balance stick-on weight<br>60 G. | 04- | X | |
| (3) | 997 361 465 00 | balance stick-on weight<br>65 G. | | X | |
| (3) | 997 361 470 00 | balance stick-on weight<br>70 G. | | X | |
| (3) | 997 361 475 00 | balance stick-on weight<br>75 G. | | X | |
| (3) | 997 361 480 00 | balance stick-on weight<br>80 G. | | X | |
| (3) | 997 361 485 00 | balance stick-on weight<br>85 G. | | X | |
| (3) | 997 361 490 00 | balance stick-on weight<br>90 G. | | X | |
| 4 | A 996 361 057 00 | wheel bolt<br>anti-theft protection<br>1 set | | 1 | |
| (4) | A 996 361 057 01 | wheel bolt<br>anti-theft protection<br>1 set | -03 | 1 | |
| (4) | 996 361 057 02 | wheel bolt<br>anti-theft protection<br>1 set | 04- | 1 | |
| (4) | A 996 361 057 90 | wheel bolt<br>anti-theft protection<br>1 set | -03 | 1 | XRP |
| (4) | 996 361 980 02 | wheel bolt<br>anti-theft protection<br>1 set | 04- | 1 | XRP |
| (4) | 996 361 980 02 | wheel bolt<br>anti-theft protection<br>1 set | 04 | 1 | M 091 |
| 5 | A 996 361 203 00 | wheel bolt | -00 | 16 | |
| (5) | A 996 361 203 01 | wheel bolt<br>see technical information<br>group 4<br>NR.2/03 | -03 | 16 | |
| (5) | 996 361 203 02 | wheel bolt<br>see technical information<br>group 4<br>NR.2/03 | 04- | 16 | |
| (5) | A 996 361 203 90 | wheel bolt<br>see technical information<br>group 4<br>NR.2/03 | -03 | 16 | XRP |
| (5) | 996 361 980 00 | wheel bolt<br>see technical information<br>group 4<br>NR.2/03 | 04- | 16 | XRP |
| (5) | 996 361 980 00 | wheel bolt | 04 | 16 | M 091 |
| - | 999 182 003 36 | wheel nut | 01- | 10 | XRN |
| - | 999 182 003 36 | wheel nut | 04 | 10 | M 091 |
| 6 | 993 361 303 05 | hub cap | -99 | 4 | |
| | 61M | silver | | | |
| (6) | 993 361 303 11 | hub cap | 00 | 4 | |
| | 61M | silver | | | |
| (6) | 993 361 303 11 | hub cap | 02- | 4 | |

| Pos | Part Number | Description | Remark | Qty | Model |
|---|---|---|---|---|---|
| | 9A1 | silver | | | |
| (6) | A 993 361 303 09 | hub cap | -99 | 4 | M 446 |
| | 92T | arctic silver metallic<br>crest<br>coloured | | | |
| (6) | 993 361 303 10 | hub cap | 00- | 4 | M 446 |
| | 9A1 | silver<br>crest<br>coloured | | | |
| (6) | 996 361 303 09 | hub cap | | 4 | M 414 |
| (6) | 993 361 303 10 | hub cap | 04 | 4 | M 091/191 |
| | 6B4 | seal grey metallic<br>crest<br>coloured | | | |
| 7 | 996 362 030 00 | emergency wheel | | 1 | |

| Pos | Part Number | Description | Remark | Qty | Model |
|---|---|---|---|---|---|

| Model | Year | MG | SG | Illustration | Restrictions | UPD | 18:21 | 30.07.2008 |
|---|---|---|---|---|---|---|---|---|
| 986 | 2004 | 6 | 02 | 602-00 | | 229 | | |

PORSCHE PET PORSCHE

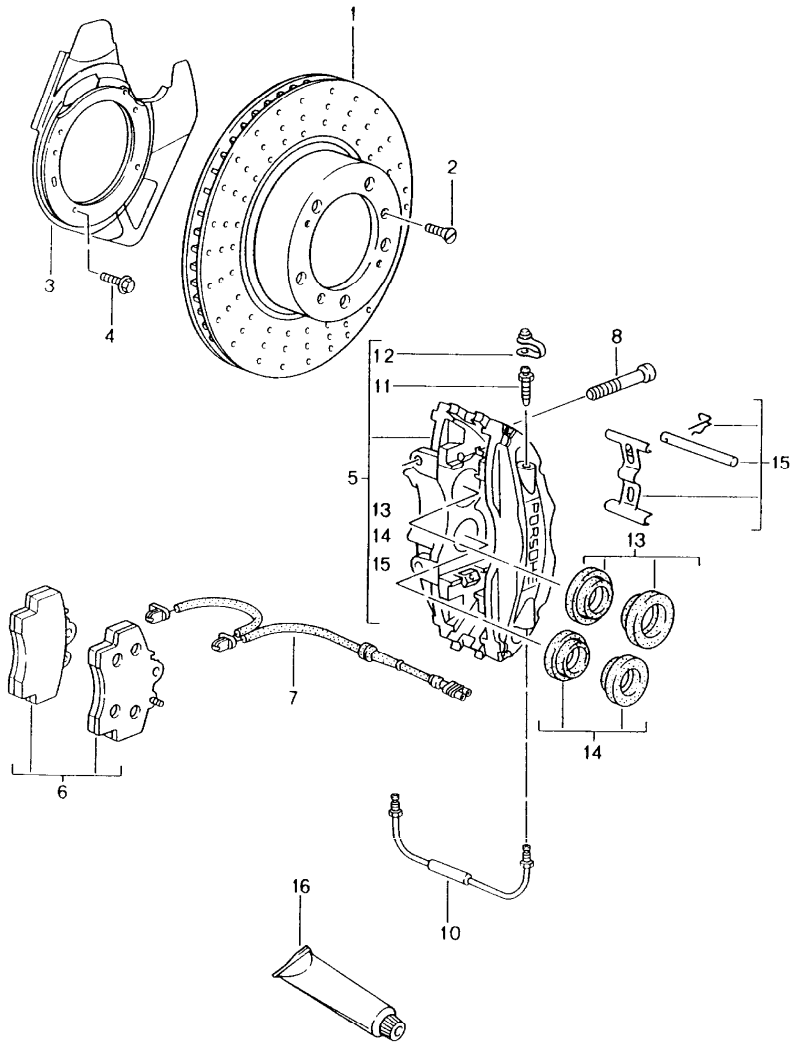


| Pos | | Part Number | Description | Remark | Qty | Model |
|---|---|---|---|---|---|---|
| | | | disc brake<br>front axle | | | |
| 1 | | 986 351 401 05 | brake disc | | 2 | |
| (1) | | 996 351 405 01 | brake disc | /L 00- | 1 | M 008 |
| (1) | | 996 351 406 01 | brake disc | /R 00- | 1 | M 008 |
| 2 | | 900 269 047 09 | countersunk-head screw<br>M 6 X 12 | | 4 | |
| (2) | | 900 269 106 09 | countersunk-head screw<br>M 6 X 16 | 01- | 4 | XRP |
| (2) | | 900 269 106 90 | countersunk-head screw<br>M 6 X 16<br>see technical information<br>group 4<br>NR.1/04<br>NR.2/04 | 04 | 4 | M 091 |
| 3 | U | 996 351 081 02 | cover plate | /L | 1 | |
| (3) | | 996 351 081 03 | protective plate<br>F >>98XS6 01524 | /L | 1 | |
| (3) | | 996 351 801 04 | protective plate<br>F 98XS6 01525>> | /L | 1 | |
| (3) | U | 996 351 082 02 | cover plate | /R | 1 | |
| (3) | | 996 351 082 03 | protective plate<br>F >>98XS6 01186 | /R | 1 | |
| (3) | | 996 351 802 04 | protective plate<br>F 98XS6 01187>> | | 1 | |
| 4 | | 999 217 116 09 | hexagon-head bolt<br>M 6 X 16 | | X | |
| 5 | | 986 351 421 03 | fixed calliper<br>without pad | /L | 1 | |
| (5) | | 996 351 425 11 | fixed calliper<br>without pad | /L 00- | 1 | M 008 |
| (5) | | 996 351 425 22 | fixed calliper<br>without pad | /L 04 | 1 | M 091 |
| (5) | | 986 351 422 03 | fixed calliper<br>without pad | /R | 1 | |
| (5) | | 996 351 426 11 | fixed calliper<br>without pad | /R 00- | 1 | M 008 |

| Pos | Part Number | Description | Remark | Qty | Model |
|---|---|---|---|---|---|
| (5) | 996 351 426 22 | fixed calliper<br>without pad | /R 04 | 1 | M 091 |
| 6 | A 986 351 939 11 | brake pad repair set | | 1 | |
| (6) | A 986 351 939 13 | brake pad repair set | | 1 | |
| (6) | 986 351 939 15 | brake pad repair set | | 1 | |
| (6) | A 996 352 949 02 | brake pad repair set | -04 | 1 | M 008 |
| (6) | 996 352 949 03 | brake pad repair set<br>use also:<br>mounting parts | | 1 | M 008 |
| - | 996 351 088 01 | damping plate<br>$ 36/40 MM | 00- | 4 | M 008 |
| 7 | 996 612 365 00 | warning contact | | 2 | |
| 8 | 999 067 041 09 | pan-head screw<br>M 12 X 1,5 X 72 | | 4 | |
| - | 999 507 530 00 | cable holder<br>for<br>warning contact | | 2 | |
| 10 | 996 352 962 00 | connecting line | /L | 1 | |
| (10) | 996 351 961 00 | connecting line | /L | 1 | M 008 |
| (10) | 996 352 961 00 | connecting line | /R | 1 | |
| (10) | 996 351 962 00 | connecting line | /R | 1 | M 008 |
| 11 | 930 351 919 00 | ventilation valve | | 2 | |
| 12 | 930 351 927 00 | cap | | 2 | |
| 13 | 951 351 917 01 | repair kit<br>protection caps<br>40 MM $ | | 2 | |
| 14 | 951 351 917 00 | repair kit<br>protection caps<br>36 MM $ | | 2 | |
| 15 | 996 352 959 01 | repair kit<br>mounting parts<br>bolt<br>expanding spring<br>securing clip | | 1<br><br>2<br>2<br>2 | |
| (15) | 996 351 959 01 | repair kit<br>mounting parts<br>bolt<br>expanding spring<br>securing clip | | 1<br><br>2<br>2<br>2 | M 008 |
| 16 | 000 043 117 00 | brake cylinder paste<br>50 G | | X | |
| (16) | 000 043 020 00 | optimoly<br>100 G | | X | |

| Model | Year | MG | SG | Illustration | Restrictions | UPD | 18:21 | 30.07.2008 | PET |
|---|---|---|---|---|---|---|---|---|---|
| 986 | 2004 | 6 | 03 | 603-00 | | 229 | | | |

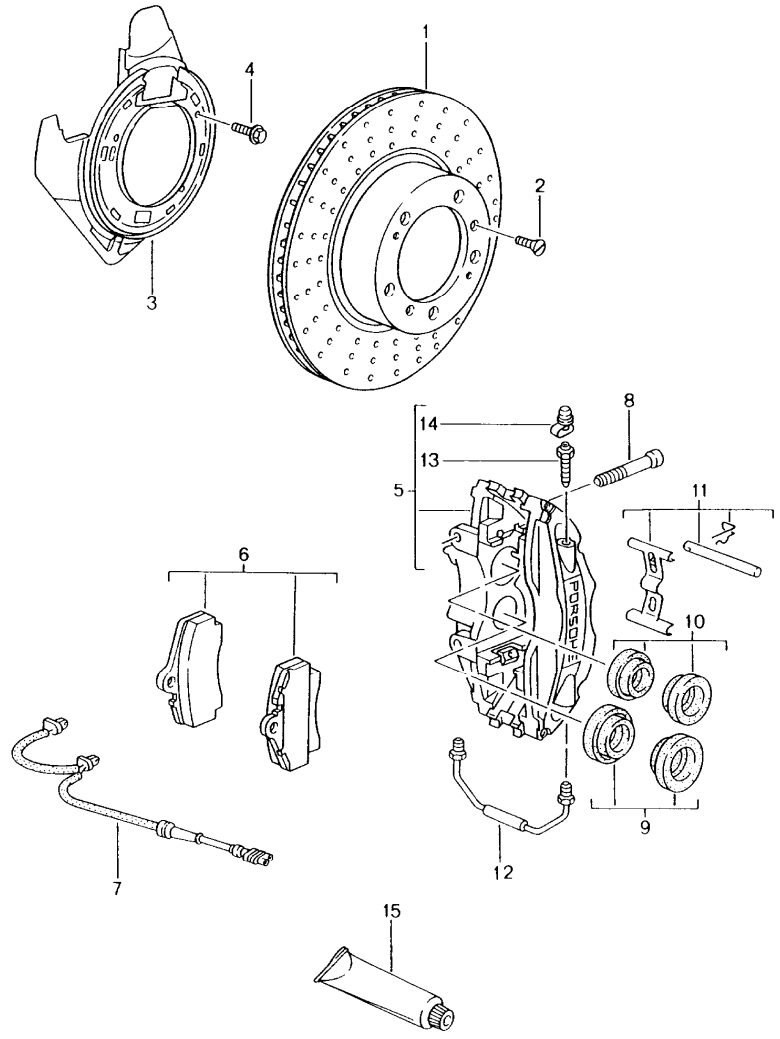


| Pos | Part Number | Description | Remark | Qty | Model |
|---|---|---|---|---|---|
| | | disc brake<br>rear axle | | | |
| 1 | 986 352 401 04 | brake disc | | 2 | |
| (1) | 986 352 403 01 | brake disc | 00- | 2 | M 008 |
| 2 | 900 269 047 09 | countersunk-head screw<br>M 6 X 12 | | 4 | |
| (2) | 900 269 106 09 | countersunk-head screw<br>M 6 X 16 | 01- | 4 | XRP |
| (2) | 900 269 106 09 | countersunk-head screw<br>M 6 X 16<br>see technical information<br>group 4<br>NR.1/04<br>NR.2/04 | 04 | 4 | M 091 |
| 3 | 986 352 081 03 | protective plate<br>F >>98XS6 01524 | /L | 1 | |
| (3) | 986 352 081 04 | protective plate<br>F 98XS6 01525>> | /L | 1 | |
| (3) | 986 352 082 03 | protective plate<br>F >>98XS6 01186 | /R | 1 | |
| (3) | 986 352 082 04 | protective plate<br>F 98XS6 01187>> | /R | 1 | |
| (3) A | 986 352 801 00 | protective plate | | 2 | M 008 |
| (3) | 987 352 801 00 | protective plate | | 2 | M 008 |
| 4 | 999 217 116 09 | hexagon-head bolt<br>M 6 X 16 | | X | |
| 5 | 986 352 423 01 | fixed calliper<br>without pad | /L | 1 | |
| (5) | 996 352 421 13 | fixed calliper<br>without pad | /L 00- | 1 | M 008 |
| (5) | 996 352 421 24 | fixed calliper<br>without pad | /L 04 | 1 | M 091 |
| (5) | 986 352 424 01 | fixed calliper<br>without pad | /R | 1 | |
| (5) | 996 352 422 13 | fixed calliper<br>without pad | /R 00- | 1 | M 008 |
| (5) | 996 352 422 24 | fixed calliper<br>without pad | /R 04 | 1 | M 091 |

| Pos | Part Number | Description | Remark | Qty | Model |
|---|---|---|---|---|---|
| (6) | 986 352 939 10 | brake pad repair set | | 1 | M 009 |
| 6 | A 996 352 939 00 | brake pad repair set | | 1 | M 008 |
| (6) | 996 352 939 03 | brake pad repair set<br>use also:<br>mounting parts | | 1 | M 008 |
| 7 | 986 612 365 00 | warning contact | | 2 | |
| 8 | 999 067 041 09 | pan-head screw<br>M 12 X 1,5 X 72 | | 4 | |
| - | 944 612 627 00 | cable holder<br>for<br>warning contact | | 2 | |
| 9 | 951 352 917 01 | repair kit<br>protection caps<br>30 MM $ | | 2 | |
| 10 | 951 352 917 00 | repair kit<br>protection caps<br>28 MM $ | | 2 | |
| 11 | 996 352 959 01 | repair kit<br>mounting parts<br>bolt<br>expanding spring<br>securing clip | | 1<br><br>2<br>2<br>2 | |
| (11) | 996 352 959 01 | repair kit<br>mounting parts<br>bolt<br>expanding spring<br>securing clip | | 1<br>2<br>2<br>2<br>2 | |
| - | 964 352 096 00 | damping plate<br>30 MM $ | 00- | 4 | M 008 |
| - | 964 352 096 01 | damping plate<br>28 MM $ | 00- - | 4 | M 008 |
| 12 | 996 352 961 00 | connecting line | /L | 1 | |
| (12) | 996 352 962 00 | connecting line | /R | 1 | |
| 13 | 930 351 919 00 | ventilation valve | | 4 | |
| 14 | 930 351 927 00 | cap | | 4 | |
| 15 | 000 043 117 00 | brake cylinder paste<br>50 G | | X | |
| (15) | 000 043 020 00 | optimoly<br>100 G | | X | |

| Pos | Part Number | Description | Remark | Qty | Model |
|---|---|---|---|---|---|

| Model | Year | MG | SG | Illustration | Restrictions | UPD | 18:21 | 30.07.2008 | PET |
|---|---|---|---|---|---|---|---|---|---|
| 986 | 2004 | 6 | 03 | 603-05 | | 229 | | | |

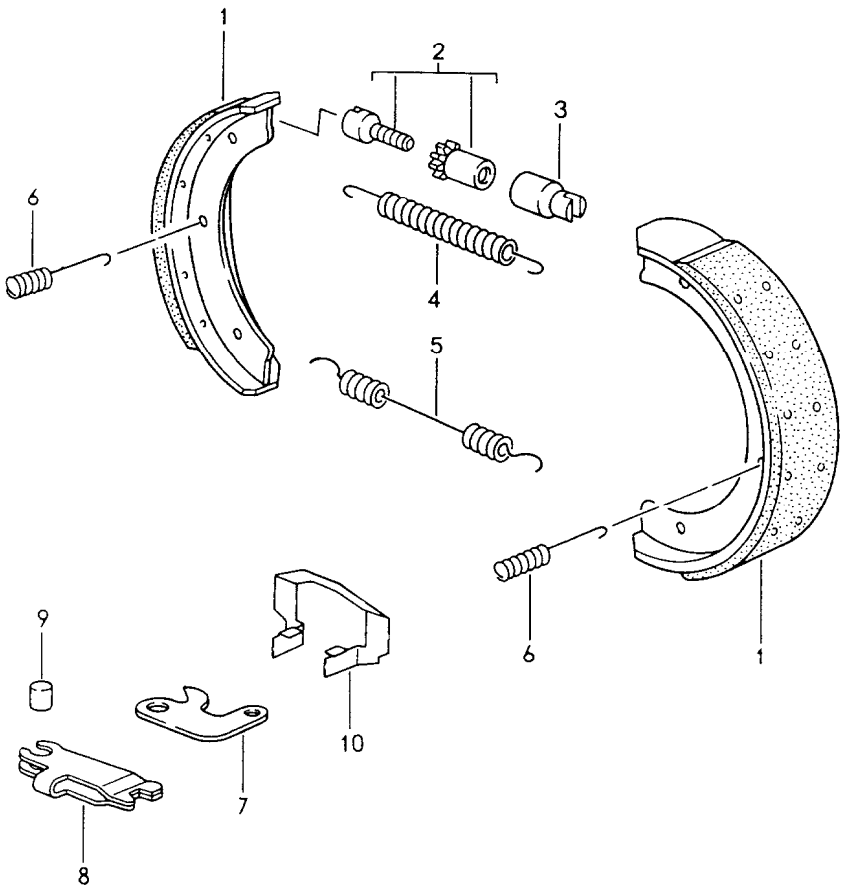


| Pos | Part Number | Description | Remark | Qty | Model |
|---|---|---|---|---|---|
| | | handbrake | | | |
| 1 | 986 352 095 01 | brake shoe | -02 | 4 | |
| (1) | 986 352 995 01 | brake shoe<br>1 set | 03- | 1 | |
| (1) | 928 352 097 10 | brake shoe | -02 | 4 | M 008 |
| (1) | 996 352 993 02 | brake shoe<br>1 set | 03- | 1 | M 008 |
| 2 | 986 352 071 00 | adjusting screw | | 2 | |
| (2) | 993 352 071 00 | adjusting screw | 00- | 2 | M 008 |
| 3 | 986 352 715 00 | support bush | | 2 | |
| (3) | 911 352 944 00 | support bush | 00 | 2 | M 008 |
| 4 | 986 352 721 00 | tension spring | | 2 | |
| (4) | 901 352 932 10 | tension spring | 00- | 2 | M 008 |
| 5 | 986 352 723 01 | tension spring | | 2 | |
| (5) | 951 352 454 00 | tension spring | 00- | 2 | M 008 |
| 6 | 986 352 741 00 | tension spring | | 4 | |
| (6) | 996 352 741 00 | tension spring | 00- | 4 | M 008 |
| 7 | 986 352 731 01 | actuating lever | | 2 | |
| 8 | 986 352 733 02 | clip | | 2 | |
| 9 | 986 352 735 00 | articulated bolt | | 2 | |
| - | 986 352 073 02 | expanding bow<br>comprising:<br>picture<br>7,8,9 | | 2 | |
| 10 | 986 352 805 01 | supporting plate | | 2 | |
| (10) | 996 352 807 01 | supporting plate | 00- | 2 | M 008 |

| Model | Year | MG | SG | Illustration | Restrictions | UPD | 18:21 | 30.07.2008 | PET |
|---|---|---|---|---|---|---|---|---|---|
| 986 | 2004 | 6 | 04 | 604-00 | | 229 | | | |

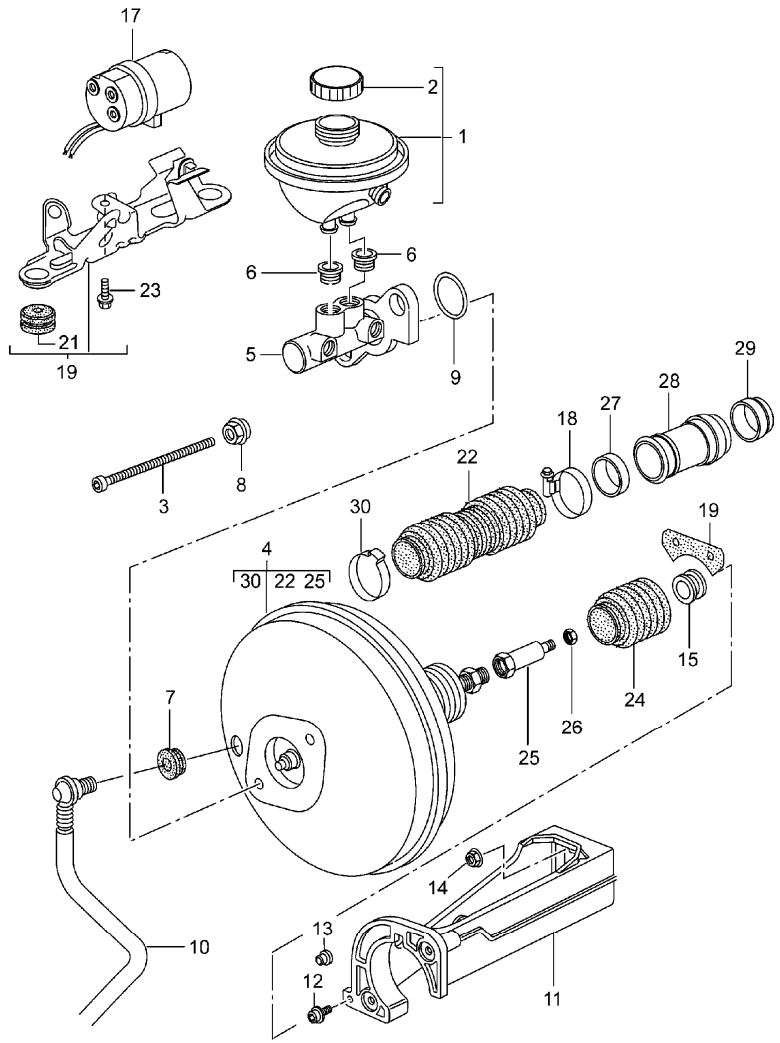


| Pos | Part Number | Description | Remark | Qty | Model |
|---|---|---|---|---|---|
| | | brake master cylinder<br>brake booster<br>pre-charge pump | | | M 476 |
| - | 000 043 204 66 | modification kit<br>seal<br>brake booster<br>comprising:<br>999.512.672.00<br>996.423.269.05<br>999.512.478.00<br>996.355.911.00<br>996.355.909.00<br>996.355.907.00<br>996.355.927.01<br>900.380.015.09<br>F >>98YS6 00434<br>F >>98YU6 00165<br>F >>98YS6 40520<br>F >>98YU6 40062<br>see technical information<br>group 4<br>NR.6/01 | | 1<br><br><br><br>1<br>1<br>1<br>1<br>1<br>1<br>1<br>1 | |
| 1 | 996 355 013 00 | container | -03 | 1 | M 481/480 |
| (1) | 996 355 013 01 | container | 04- | 1 | M 481/480 |
| (1) | 996 355 013 20 | container | -03 | 1 | M 249 |
| (1) | 996 355 013 21 | container | 04- | 1 | M 249 |
| (1) | A 996 355 013 44 | container | 01<br>01 | 1<br>1 | M 481/476<br>M 480/476 |
| (1) | A 996 355 013 46 | container | -03<br>-03 | 1<br>1 | M 481/476<br>M 480/476 |
| (1) | 996 355 013 48 | container | 04-<br>04- | 1 | M 481/476<br>M 480/476 |
| (1) | A 996 355 013 45 | container | 01 | 1 | M 249/476 |
| (1) | 996 355 013 47 | container | -03 | 1 | M 249/476 |
| (1) | 996 355 013 49 | container | 04- | 1 | M 249/476 |
| 2 | 996 355 119 01 | screw cap | | 1 | |
| - | A 996 355 125 00 | contacts<br>for<br>container<br>996.355.013.00<br>996.355.013.20 | -03 | 1 | |

| Pos | Part Number | Description | Remark | Qty | Model |
|---|---|---|---|---|---|
| - | 996 355 125 02 | contacts<br>for<br>container<br>996.355.013.00/01<br>996.355.013.20/21 | 04- | 1 | |
| - | 996 355 125 01 | contacts<br>for<br>container<br>996.355.013.44<br>996.355.013.45<br>996.355.013.46<br>996.355.013.47<br>996.355.013.48<br>996.355.013.49 | | 1 | |
| 3 | 999 073 124 09 | pan-head screw<br>M 8 X 154 X 80 | | 2 | |
| 4 | 996 355 923 00 | brake booster | | 1 | |
| - | A 996 355 137 00 | catch | | 1 | |
| - | 996 355 137 01 | cap<br>threaded joint<br>brake booster | | 1 | |
| 5 | 996 355 910 00 | brake master cylinder | | 1 | |
| (5) | 996 355 910 40 | brake master cylinder | 01- | 1 | M 476 |
| 6 | 993 355 922 00 | gasket | | 2 | |
| 7 | 999 702 182 40 | gasket | | 1 | |
| 8 | 997 355 925 00 | hexagon nut | | 2 | |
| 9 | 996 355 912 00 | sealing ring | | 1 | |
| 10 | 996 355 577 02 | vacuum line | /LL -99 | 1 | |
| (10) | 996 355 577 42 | vacuum line | /LL 00- | 1 | |
| (10) | 996 355 577 43 | vacuum line | /LL 04- | 1 | |
| (10) | 996 355 578 04 | vacuum line | /RL -99 | 1 | |
| (10) | 996 355 578 05 | vacuum line | /RL 00- | 1 | |
| (10) | 996 355 578 06 | vacuum line | /RL 04- | 1 | |
| 11 | 996 423 251 01 | intermediate piece | | 1 | |
| 12 | 900 067 240 02 | combination screw<br>M 6 X 12 Z1 | | 2 | |
| 13 | 999 703 448 50 | stopper | /R | 1 | |
| 14 | 900 380 005 09 | hexagon nut<br>M 8 | | 2 | |
| 15 | U 996 355 221 00 | grommet<br>F >>98YS6 00434<br>F >>98YU6 00165<br>F >>98YS6 40520<br>F >>98YU6 40062<br>see technical information<br>group 4<br>NR.6/01 | | 1 | |
| 16 | 996 423 301 00 | gasket | | 1 | |
| - | 996 355 901 01 | gasket<br>brake booster<br>bulkhead | | 1 | |
| 17 | 996 355 975 41 | pre-charge pump | 01- | 1 | M 476 |
| - | 996 355 635 40 | adapter<br>feed line | 01- | 1 | M 476 |
| - | 999 512 390 00 | hose clamp | 01- | 1 | M 476 |
| 18 | 999 512 478 00 | hose clamp<br>F 98YS6 00435>><br>F 98YU6 00166>><br>F 98YS6 40521>><br>F 98YU6 40063>><br>see technical information<br>group 4<br>NR.6/01 | | 1 | |
| 19 | 996 355 183 40 | support | 01- | 1 | M 476 |
| 21 | 964 356 635 00 | rubber mounting | 01- | 2 | M 476 |
| - | 999 045 004 40 | plastic nut | 01- | 3 | M 476 |
| (22) | U 996 423 269 04 | bellows<br>F >>98YS6 00434<br>F >>98YU6 00165<br>F >>98YS6 40520<br>F >>98YU6 40062<br>see technical information<br>group 4<br>NR.6/01 | | 1 | |
| (22) | 996 423 269 05 | bellows<br>F 98XS6 00435>><br>F 98YU6 00166>><br>F 98YS9 40521>><br>F 98YU6 40063>> | | 1 | |

| Pos | Part Number | Description | Remark | Qty | Model |
|---|---|---|---|---|---|
| 23 | 900 378 036 09 | hexagon-head bolt<br>M 6 X 12 | 01- | 1 | M 476 |
| 24 | U 996 355 930 00 | bellows<br>F >>98YS6 00434<br>F >>98YU6 00165<br>F >>98YS6 40520<br>F >>98YU6 40062<br>see technical information<br>group 4<br>NR.6/01 | | 1 | |
| 25 | 996 355 927 01 | connecting piece | | 1 | |
| 26 | 900 380 015 09 | hexagon nut<br>M 6 | | 1 | |
| 27 | 996 355 911 00 | sealing ring<br>F >>98YS6 00434<br>F >>98YU6 00165<br>F >>98YS6 40520<br>F >>98YU6 40062<br>see technical information<br>group 4<br>NR.6/01 | | 1 | |
| 28 | 996 355 909 00 | connecting piece<br>F >>98YS6 00434<br>F >>98YU6 00165<br>F >>98YS6 40520<br>F >>98YU6 40062<br>see technical information<br>group 4<br>NR.6/01 | | 1 | |
| 29 | 996 355 907 00 | sealing rubber<br>F >>98YS6 00434<br>F >>98YU6 00165<br>F >>98YS6 40520<br>F >>98YU6 40062<br>firewall<br>see technical information<br>group 4<br>NR.6/01 | | 1 | |
| 30 | 999 512 672 00 | hose clamp<br>F 98YS6 00435>><br>F 98YU6 00166>><br>F 98YS6 40521>><br>F 98YU6 40063>> | | 1 | |

| Pos | Part Number | Description | Remark | Qty | Model |
|---|---|---|---|---|---|

| Model | Year | MG | SG | Illustration | Restrictions | UPD | 18:22 | 30.07.2008 | PET |
|---|---|---|---|---|---|---|---|---|---|
| 986 | 2004 | 6 | 04 | 604-05 | | 229 | | | |

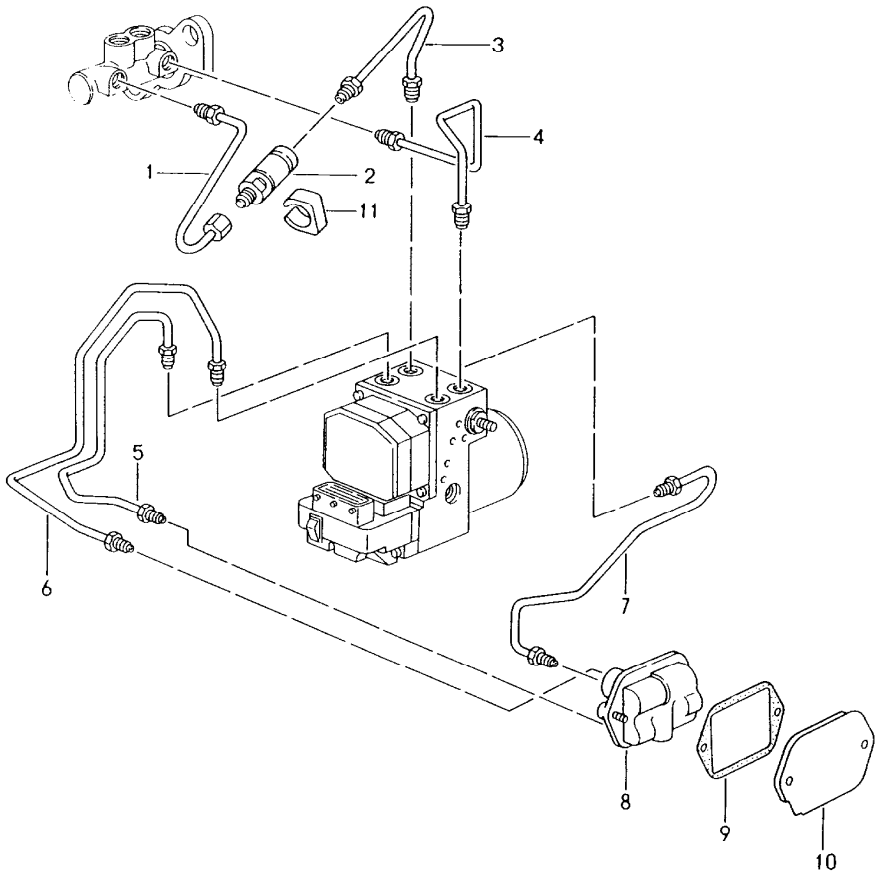


| Pos | Part Number | Description | Remark | Qty | Model |
|---|---|---|---|---|---|
| | | brake lines<br>body front section | | | |
| 1 | 996 355 309 01 | brake line | /LL -01 | 1 | |
| (1) | 996 355 308 04 | brake line | /RL -01 | 1 | |
| 2 | 986 355 305 00 | pressure regulator | -01 | 1 | |
| 3 | 996 355 311 02 | brake line | /LL -01 | 1 | |
| (3) | 996 355 311 42 | pressure line | /LL 02- | 1 | |
| (3) | 996 355 310 03 | brake line | /RL -01 | 1 | |
| (3) | 996 355 320 44 | pressure line | /RL 02- | 1 | |
| 4 | 996 355 313 02 | brake line | /LL -01 | 1 | |
| (4) | 996 355 313 03 | brake line | /LL 02- | 1 | |
| (4) | 996 355 314 05 | brake line | /RL -01 | 1 | |
| (4) | 996 355 314 06 | brake line | /RL 02- | 1 | |
| 5 | 996 355 315 02 | brake line | -01 | 1 | |
| (5) | 996 355 315 43 | pressure line | 02- | 1 | |
| 6 | 996 355 327 03 | brake line | -01 | 1 | |
| (6) | 996 355 327 43 | pressure line | 02- | 1 | |
| 7 | 996 355 326 04 | brake line | -01 | 1 | |
| (7) | 996 355 326 40 | brake line | 02- | 1 | |
| 8 | 996 355 650 02 | intermediate piece | | 1 | |
| 9 | 996 355 752 00 | gasket | -01 | 1 | |
| (9) | 996 355 752 01 | gasket | 02- | 1 | |
| 10 | 996 355 753 00 | reinforcement | | 1 | |
| 11 | 999 651 292 40 | support | | 1 | |

| Model | Year | MG | SG | Illustration | Restrictions | UPD | 18:22 | 30.07.2008 | PET |
|---|---|---|---|---|---|---|---|---|---|
| 986 | 2004 | 6 | 04 | 604-08 | | 229 | | | |

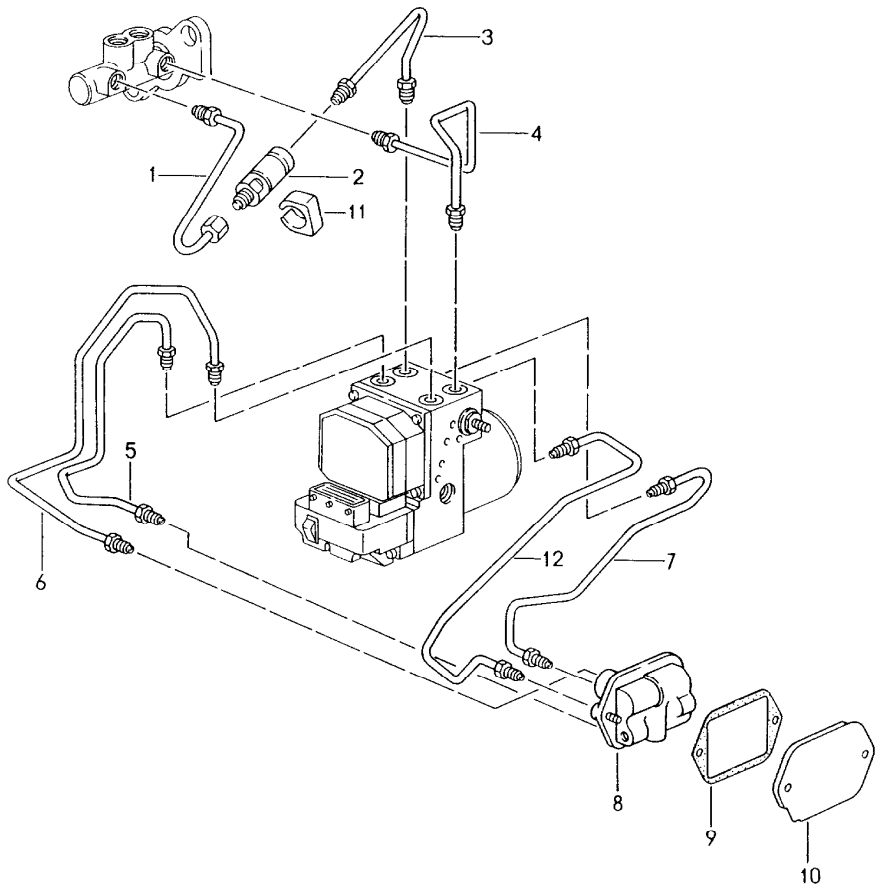


| Pos | Part Number | Description | Remark | Qty | Model |
|---|---|---|---|---|---|
| | | brake lines<br>body front section | -01 | | M 222/224 |
| 1 | 996 355 309 01 | brake line | /LL | 1 | |
| (1) | 996 355 308 03 | brake line | /RL -98 | 1 | |
| (1) | 996 355 308 04 | brake line | /RL 99- | 1 | |
| 2 | 986 355 305 00 | pressure regulator | | 1 | |
| 3 | 996 355 311 02 | brake line | /LL | 1 | |
| (3) | 996 355 310 03 | brake line | /RL | 1 | |
| 4 | 996 355 313 02 | brake line | /LL | 1 | |
| (4) | 996 355 314 05 | brake line | /RL | 1 | |
| 5 | 996 355 315 02 | brake line | | 1 | |
| 6 | 996 355 327 03 | brake line | | 1 | |
| 7 | 996 355 326 04 | brake line | | 1 | |
| 8 | 996 355 650 27 | intermediate piece | | 1 | |
| 9 | 996 355 752 00 | gasket | -01 | 1 | |
| 10 | 996 355 753 00 | reinforcement | | 1 | |
| 11 | 999 651 292 40 | support | | 1 | |
| 12 | 996 355 316 04 | brake line | | 1 | |

| Model | Year | MG | SG | Illustration | Restrictions | UPD | 18:22 | 30.07.2008 | PET |
|---|---|---|---|---|---|---|---|---|---|
| 986 | 2004 | 6 | 04 | 604-09 | | 229 | | | |

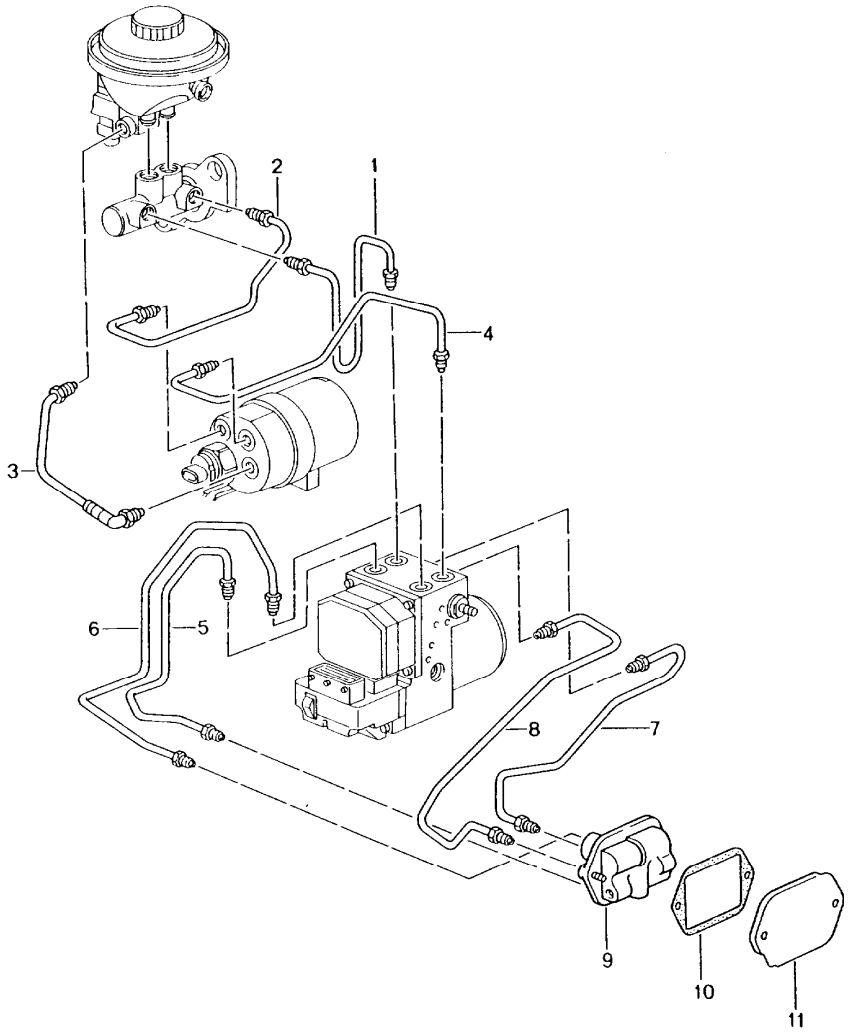


| Pos | Part Number | Description | Remark | Qty | Model |
|---|---|---|---|---|---|
| | | brake lines<br>body front section | 01- | | M 476 |
| (1) | 996 355 311 42 | pressure line | /LL | 1 | |
| (1) | 996 355 320 44 | pressure line | /RL | 1 | |
| (2) | 996 355 353 45 | pressure line | /LL | 1 | |
| (2) | 996 355 354 42 | pressure line | /RL | 1 | |
| (3) | 996 355 321 41 | pressure line | /LL | 1 | |
| (3) | 996 355 322 41 | pressure line | /RL | 1 | |
| (4) | 996 355 357 42 | pressure line | -02 | 1 | |
| (4) | 996 355 357 43 | pressure line | 03- | 1 | |
| (5) | 996 355 315 43 | pressure line | | 1 | |
| (6) | 996 355 327 43 | pressure line | | 1 | |
| (7) | 996 355 316 41 | pressure line | | 1 | |
| (8) | 996 355 326 40 | pressure line | | 1 | |
| 9 | 996 355 650 27 | intermediate piece | | 1 | |
| 10 | 996 355 752 00 | gasket | -01 | 1 | |
| (10) | 996 355 752 01 | gasket | 02- | 1 | |
| 11 | 996 355 753 00 | reinforcement | | 1 | |

| Model | Year | MG | SG | Illustration | Restrictions | UPD | 18:22 | 30.07.2008 | PET |
|---|---|---|---|---|---|---|---|---|---|
| 986 | 2004 | 6 | 04 | 604-10 | | 229 | | | |

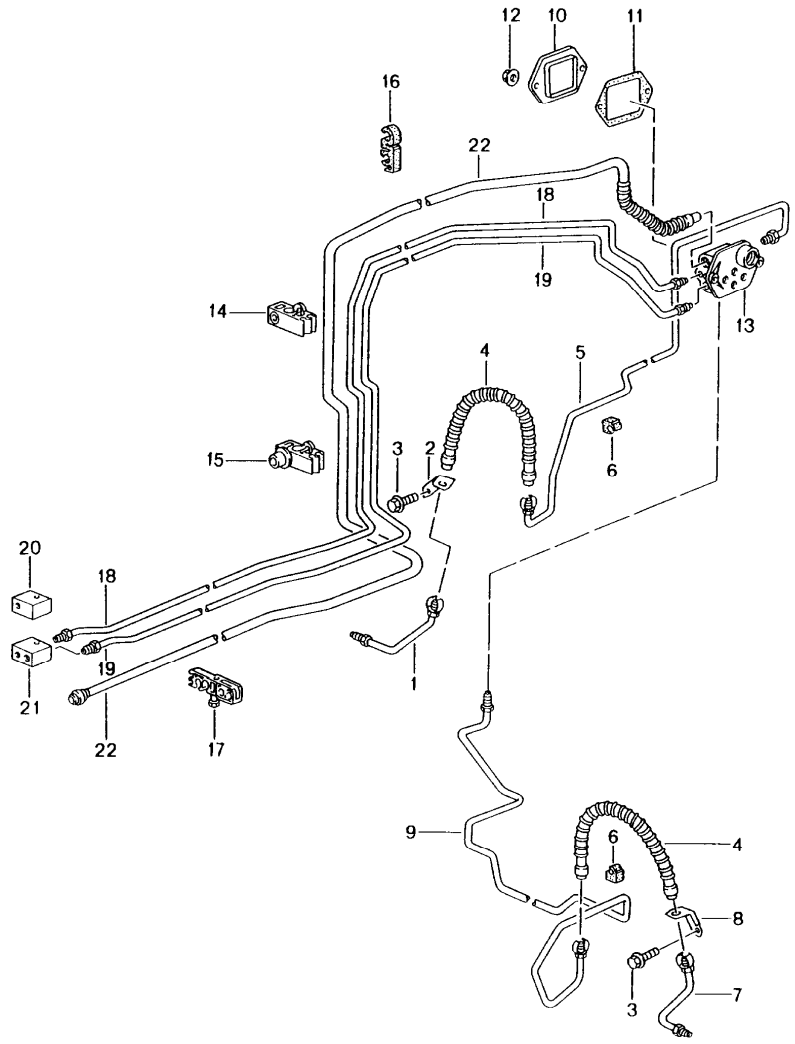


| Pos | Part Number | Description | Remark | Qty | Model |
|---|---|---|---|---|---|
| | | brake lines<br>front axle<br>underbody<br>vacuum line | | | |
| 1 | 996 355 581 06 | brake line | /L | 1 | |
| 2 | 996 355 501 05 | support | /L -99 | 1 | |
| (2) | 996 355 501 06 | support | /L 00- | 1 | |
| 3 | 900 075 355 01 | pan-head screw<br>M 6 X 16 | 97 | 2 | |
| (3) | 900 067 117 09 | combination screw<br>M 6 X 16 | 98- | 2 | |
| 4 | 996 355 139 00 | brake hose | 97 | 2 | |
| (4) | 996 355 139 01 | brake hose | 98- | 2 | |
| 5 | 996 355 175 06 | brake line | /L 97 | 1 | |
| (5) | 996 355 175 07 | brake line<br>F >>98WS6 07094 | /L 98- | 1 | |
| (5) | 996 355 175 08 | brake line<br>F 98WS6 07095>> | /L 98- | 1 | |
| 6 | 999 591 930 40 | cable holder | | X | |
| 7 | 996 355 584 06 | brake line | /R | 1 | |
| 8 | 996 355 502 05 | support | /R -99 | 1 | |
| (8) | 996 355 502 06 | support | /R 00- | 1 | |
| 9 | 996 355 176 06 | brake line<br>F >>98WS6 07094 | /R -98 | 1 | |
| (9) | 996 355 176 07 | brake line<br>F 98WS6 07095>> | /R 98- | 1 | |
| 10 | 996 355 753 00 | reinforcement | | 1 | |
| 11 | 996 355 752 00 | gasket | -01 | 1 | |
| (11) | 996 355 752 01 | gasket | 02- | 1 | |
| 12 | 900 380 015 09 | hexagon nut<br>M 6 | | 3 | |
| 13 | 996 355 650 27 | intermediate piece | | 1 | M 222/224 |
| (13) | 996 355 650 02 | intermediate piece | | 1 | |
| 14 | 996 355 545 00 | support | | 3 | |

| Pos | Part Number | Description | Remark | Qty | Model |
|---|---|---|---|---|---|
| 15 | 996 355 549 00 | support | | 1 | |
| 16 | 996 355 547 01 | support | | 2 | |
| 17 | 996 355 543 00 | support | | 1 | |
| 18 | 996 355 177 06 | brake line | -01 | 1 | |
| (18) | 996 355 177 07 | brake line | 02 | 1 | |
| (18) | 996 355 177 08 | brake line | 03- | 1 | |
| 19 | 996 355 179 06 | brake line | | 1 | M 222/224 |
| | | | 01- | 1 | M 476 |
| (19) | 996 355 179 07 | brake line | 02 | 1 | |
| (19) | 996 355 179 08 | brake line | 03- | 1 | |
| 20 | A 996 355 660 04 | connecting piece | | 1 | |
| (20) | 996 355 660 05 | connecting piece | | 1 | |
| 21 | 996 355 760 29 | connecting piece | | 1 | M 222/224 |
| | | | 01- | 1 | M 476 |
| (21) | 996 355 760 31 | connecting piece | 03- | 1 | M 476 |
| 22 | 996 355 571 05 | vacuum line | -01 | 1 | |
| (22) | 996 355 571 07 | vacuum line | 02- | 1 | |
| - | 999 230 535 40 | sealing ring<br>connecting piece<br>vacuum line | | 1 | |

| Model | Year | MG | SG | Illustration | Restrictions | UPD | 18:23 | 30.07.2008 | PET |
|---|---|---|---|---|---|---|---|---|---|
| 986 | 2004 | 6 | 04 | 604-15 | | 229 | | | |

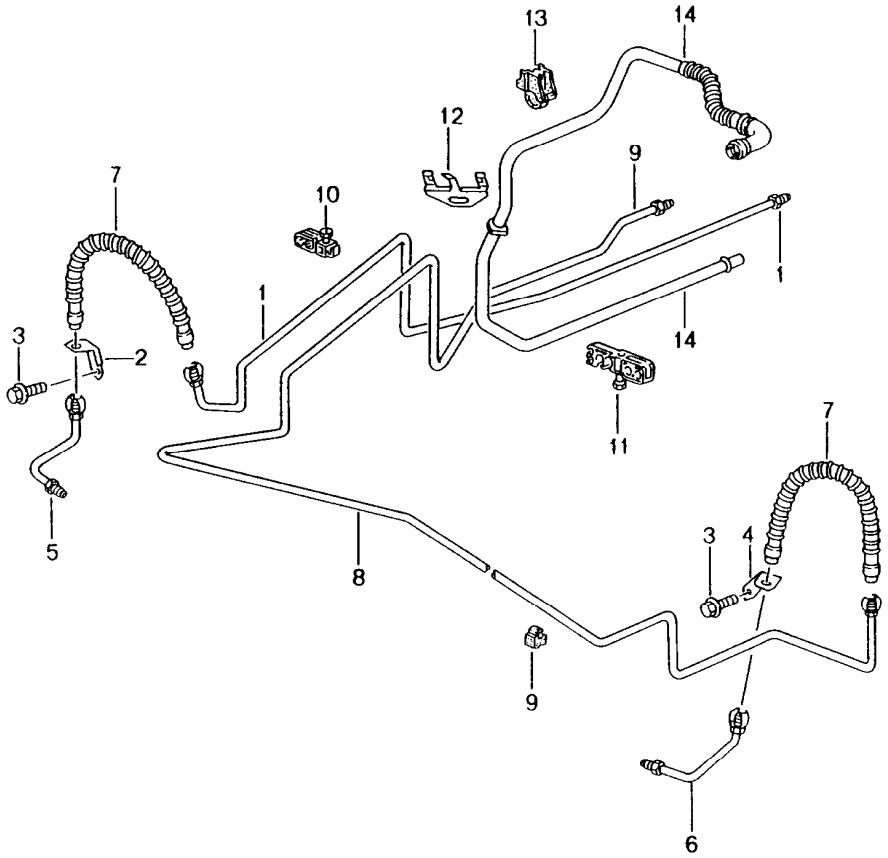


| Pos | Part Number | Description | Remark | Qty | Model |
|---|---|---|---|---|---|
| | | brake line<br>underbody<br>rear axle<br>vacuum line | | | |
| 1 | 986 355 189 06 | brake line | /L 97 | 1 | |
| (1) | 986 355 189 07 | brake line | /L 98- | 1 | |
| (1) | 986 355 189 08 | brake line | /L 03- | 1 | |
| 2 | 996 355 502 06 | brake hose bracket | /L | 1 | |
| 3 | 900 075 355 01 | hexagon-head bolt<br>M 6 X 16 | 97 | 2 | |
| (3) | 900 067 117 09 | pan-head screw<br>M 6 X 16 | 98- | 2 | |
| 4 | 996 355 501 06 | brake hose bracket | /R | 1 | |
| 5 | 996 355 584 06 | brake line | /L | 1 | |
| 6 | 996 355 581 06 | brake line | /R | 1 | |
| - | 986 501 815 00 | support<br>brake hose<br>F >>98WS6 07094 | | 2 | |
| - | 996 501 815 02 | support<br>brake hose<br>F 98WS6 07095>> | | 2 | |
| 7 | A 996 355 637 01 | brake hose | | 2 | |
| (7) | 996 355 139 01 | brake hose | | 2 | |
| 8 | 986 355 190 07 | brake line | /R 97 | 1 | |
| (8) | 986 355 190 08 | brake line | /R 98- | 1 | |
| (8) | 986 355 190 09 | brake line | /R 03- | 1 | |
| 9 | 999 591 930 40 | support | | 2 | |
| 10 | 964 423 811 00 | support | | 2 | |
| 11 | 996 355 543 00 | support | | 1 | |
| 12 | 986 355 775 00 | retaining clip | | 1 | |
| 13 | 999 507 495 40 | support | | 1 | |
| 14 | A 986 355 575 05 | vacuum line | | 1 | |
| (14) | 986 355 575 06 | vacuum line | | 1 | |

| Model | Year | MG | SG | Illustration | Restrictions | UPD | 18:23 | 30.07.2008 | PET |
|---|---|---|---|---|---|---|---|---|---|
| 986 | 2004 | 6 | 05 | 605-00 | | 229 | | | |

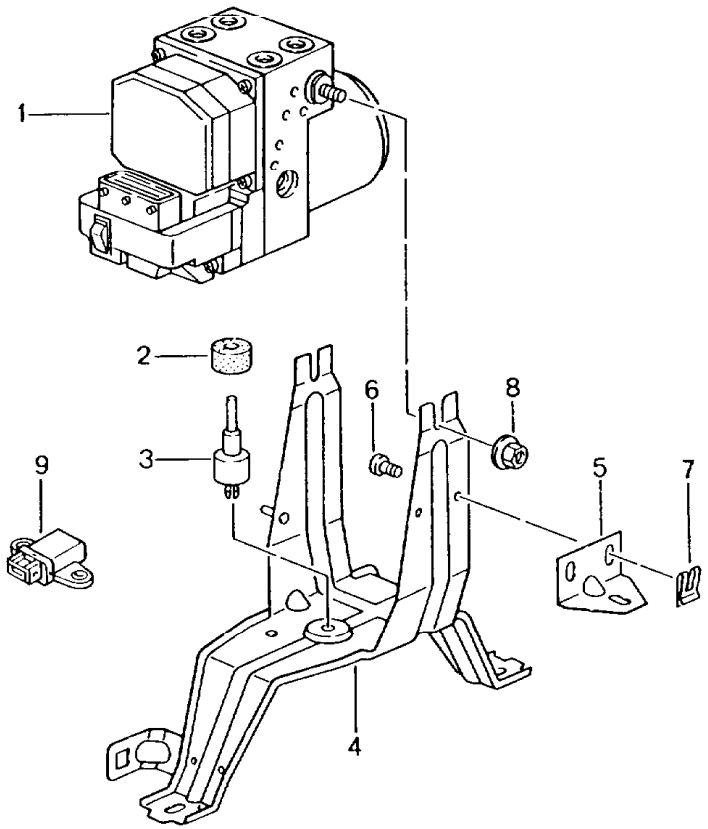


| Pos | Part Number | Description | Remark | Qty | Model |
|---|---|---|---|---|---|
| | | hydraulic unit<br>anti-lock brake system<br>control | | | |
| 1 | A 996 355 955 02 | hydraulic unit | -98 | 1 | |
| (1) | 996 355 955 03 | hydraulic unit | -98 | 1 | |
| (1) | A 996 355 955 27 | hydraulic unit | -98 | 1 | M 222/224 |
| (1) | A 996 355 955 28 | hydraulic unit | -98 | 1 | M 222/224 |
| (1) | 996 355 955 29 | hydraulic unit | 99 | 1 | M 222/224 |
| (1) | 996 355 955 31 | hydraulic unit | 02- | 1 | M 222/224 |
| (1) | 996 355 955 03 | hydraulic unit | -99 | 1 | |
| (1) | 996 355 955 04 | hydraulic unit<br>5.3 | 00 | 1 | |
| (1) | A 986 355 955 26 | hydraulic unit<br>5.3 | 00 | 1 | M 224 |
| (1) | A 986 355 955 27 | hydraulic unit<br>5.3 | 00 | 1 | M 224 |
| (1) | 986 355 955 28 | hydraulic unit<br>5.3 | 00 | 1 | M 224 |
| (1) | 986 355 955 00 | hydraulic unit<br>5.3 | 01 | 1 | |
| (1) | A 996 355 955 05 | hydraulic unit<br>5.7 | 02 | 1 | |
| (1) | 996 355 955 06 | hydraulic unit<br>5.7 | 03- | 1 | |
| (1) | A 986 355 955 41 | hydraulic unit<br>5.7 | 01 | 1 | M 476 |
| (1) | 986 355 955 42 | hydraulic unit<br>5.7 | 02- | 1 | M 476 |
| 2 | 996 355 945 00 | damping piece | | 3 | |
| 3 | 996 355 541 00 | spacer | | 1 | |
| 4 | 996 355 133 03 | support | | 1 | |
| (4) | 996 355 033 41 | support<br>with<br>rubber mounting | 01- | 1 | M 476 |
| - | 964 356 635 00 | rubber mounting | 01- | 2 | M 476 |

| Pos | Part Number | Description | Remark | Qty | Model |
|---|---|---|---|---|---|
| - | 999 703 379 40 | stopper | 01- | 2 | M 476 |
| - | 999 084 629 09 | hexagon nut<br>M 6 | | 3 | |
| 5 | 996 355 535 02 | support | | 1 | |
| 6 | 996 355 559 00 | bolt | | 2 | |
| 7 | 999 166 080 02 | lock | | 2 | |
| 8 | 900 377 003 02 | hexagon nut<br>VM 8 | | 2 | |
| 9 | 996 606 145 00 | sensor | 01- | 1 | M 476 |

| Model | Year | MG | SG | Illustration | Restrictions | UPD | 18:23 | 30.07.2008 | PET |
|---|---|---|---|---|---|---|---|---|---|
| 986 | 2004 | 7 | 01 | 701-00 | | 229 | | | |

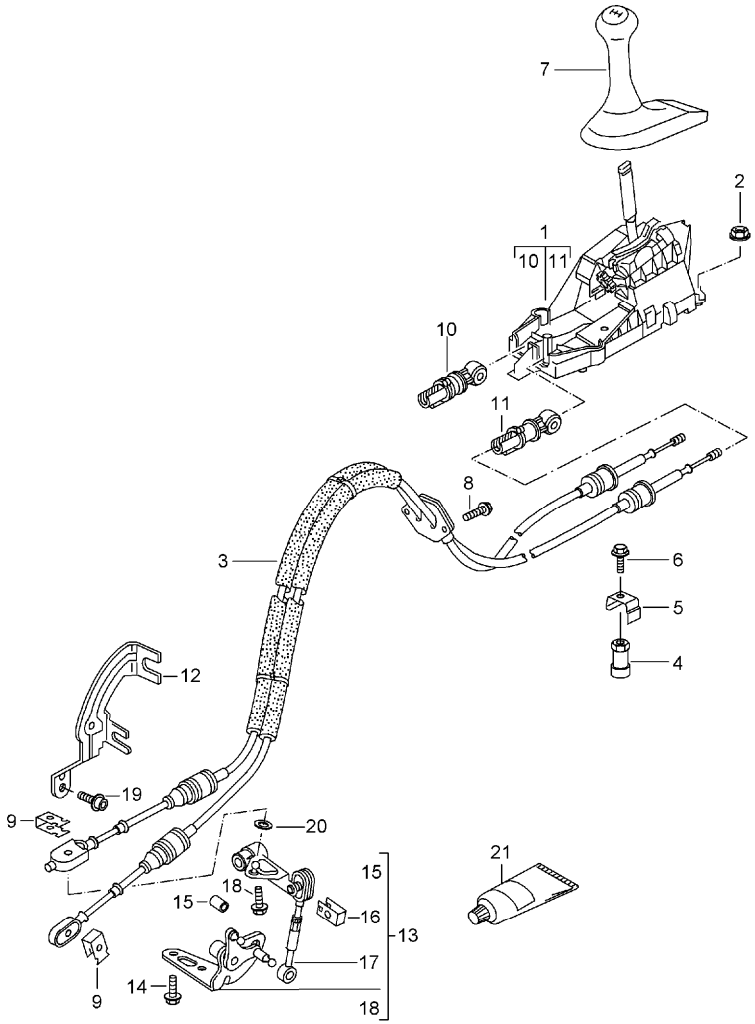


| Pos | Part Number | Description | Remark | Qty | Model |
|---|---|---|---|---|---|
| | | transmission control<br>manual transmission | | | |
| 1 | A 986 424 010 01 | gearshift bracket | -99 | 1 | M 481 |
| (1) | 986 424 010 02 | gearshift bracket | 00- | 1 | M 481 |
| (1) | 986 424 010 03 | gearshift bracket | 03- | 1 | M 481 |
| (1) | 996 424 010 04 | gearshift bracket | -02 | 1 | M 480 |
| (1) | 996 424 010 05 | gearshift bracket | 03- | 1 | M 480 |
| (1) | 986 424 010 04 | gearshift bracket | 04 | 1 | M 091 |
| (1) | 996 424 983 00 | gearshift bracket | 04 | 1 | XCZ |
| 2 | 999 084 629 09 | hexagon nut<br>M 6 | | 4 | |
| 3 | U 986 424 041 06 | cable<br>F >>98VS6 05644 | | 1 | |
| (3) | 986 424 041 07 | cable<br>F 98VS6 05645>> | -99 | 1 | |
| | | use also:<br>F >>98VS6 05644<br>986.424.913.06 | | 1 | |
| (3) | 986 424 041 08 | cable | 00 | 1 | |
| (3) | 986 424 041 09 | cable | -02 | 1 | |
| (3) | 986 424 041 10 | cable | 03- | 1 | |
| (3) | 986 424 042 05 | cable | 00 | 1 | M 008 |
| (3) | 986 424 042 06 | cable | 01 | 1 | M 008 |
| (3) | 986 424 042 07 | cable | 02- | 1 | M 008 |
| (3) | 986 424 042 08 | cable | 04 | 1 | M 091 |
| - | 986 424 411 00 | retaining clip<br>mount<br>cable<br>for<br>support | | 2 | |
| 4 | 986 424 221 00 | spacer | | 2 | |
| 5 | 986 424 211 00 | support | -99 | 1 | |
| (5) | 987 424 211 00 | support | 00- | 1 | |

| Pos | Part Number | Description | Remark | Qty | Model |
|---|---|---|---|---|---|
| 6 | 900 075 023 02 | hexagon-head bolt<br>M 8 X 12 | | 1 | |
| 7 | 986 424 075 02 | gearshift knob | 97 | 1 | |
| | EAN | satin black | | | |
| (7) | 986 424 075 02 | gearshift knob | 98- | 1 | M 016 |
| | EAN | black | | | |
| (7) | 986 424 075 03 | gearshift knob | 98- | 1 | M 011 |
| | EMK | ocean jade/black | | | |
| | EML | zenith blue/black | | | |
| (7) | 986 424 075 03 | gearshift knob | 98- | 1 | M 012 |
| | EKP | metal grey/black | | | |
| (7) | 986 424 075 04 | gearshift knob | 99- | 1 | M 010 |
| | EMM | amber/black | | | |
| (7) | 996 424 075 05 | gearshift knob | 00- | 1 | M 480 |
| | EVZ | black | | | |
| (7) | 996 424 075 05 | gearshift knob | 03- | 1 | M 480 |
| | FGT | black<br>sport silver | | | |
| | FGU | graphite grey<br>sport silver | | | |
| | FGV | savanna<br>sport silver | | | |
| | FGW | metropole blue<br>sport silver | | | |
| | FGX | nephrite green<br>sport silver | 03 | | |
| | FGY | boxster red<br>sport silver | | | |
| | FGZ | cinnamon brown<br>sport silver | | | |
| | VSW | dark grey/natural<br>sport silver | | | |
| | VSX | brown/natural<br>sport silver | | | |

| Pos | Part Number | Description | Remark | Qty | Model |
|---|---|---|---|---|---|
| (7) | 986 424 075 21 | gearshift knob | 04 | 1 | M 091 |
| | 9Q3 | cocoa | | | |
| | D11 | dark grey/natural | | | |
| (7) | 996 424 981 15 | gearshift knob | 01-02 | 1 | M 480/X97 |
| | VRJ | black | | | |
| | C50 | graphite grey | | | |
| | S30 | savanna | | | |
| | G10 | metropole blue | | | |
| | M30 | boxster red | | | |
| | P11 | cinnamon brown | | | |
| | D11 | dark grey/natural | | | |
| | T11 | brown/natural | | | |
| (7) | 996 424 981 17 | gearshift knob | 01-02 | 1 | M 480/XE8 |
| | VRJ | black | | | |
| | C50 | graphite grey | | | |
| | S30 | savanna | | | |
| | G10 | metropole blue | | | |
| | M30 | boxster red | | | |
| | P11 | cinnamon brown | | | |
| | D11 | dark grey/natural | | | |
| | T11 | brown/natural | | | |
| (7) | 996 424 981 18 | gearshift knob | 01-02 | 1 | M 480/X47 |
| | VRJ | black | | | |
| | C50 | graphite grey | | | |
| | S30 | savanna | | | |
| | G10 | metropole blue | | | |
| | M30 | boxster red | | | |
| | P11 | cinnamon brown | | | |
| | D11 | dark grey/natural | | | |

| Pos | Part Number | Description | Remark | Qty | Model |
|---|---|---|---|---|---|
| | T11 | brown/natural | | | |
| (7) | 996 424 981 22 | gearshift knob | 03- | 1 | M 480/X97 |
| | VRJ | black | | | |
| | C50 | graphite grey | | | |
| | S30 | savanna | | | |
| | G10 | metropole blue | | | |
| | J30 | nephrite green | 03 | | |
| | M30 | boxster red | | | |
| | P11 | cinnamon brown | | | |
| | D11 | dark grey/natural | | | |
| | T11 | brown/natural | | | |
| (7) | 996 424 981 28 | gearshift knob | 03- | 1 | M 480/XE8 |
| | VRJ | black | | | |
| | C50 | graphite grey | | | |
| | S30 | savanna | | | |
| | G10 | metropole blue | | | |
| | J30 | nephrite green | 03 | | |
| | M30 | boxster red | | | |
| | P11 | cinnamon brown | | | |
| | D11 | dark grey/natural | | | |
| | T11 | brown/natural | | | |
| (7) | 996 424 981 31 | gearshift knob | 03- | 1 | M 480/X47 |
| | VRJ | black | | | |
| | C50 | graphite grey | | | |
| | S30 | savanna | | | |
| | G10 | metropole blue | | | |
| | J30 | nephrite green | 03 | | |
| | M30 | boxster red | | | |
| | P11 | cinnamon brown | | | |

| Pos | Part Number | Description | Remark | Qty | Model |
|---|---|---|---|---|---|
| | D11 | dark grey/natural | | | |
| | T11 | brown/natural | | | |
| (7) | 986 424 075 05 | gearshift knob | 00- | 1 | M 481 |
| | EVZ | black | | | |
| (7) | 986 424 075 05 | gearshift knob | 03- | 1 | M 481 |
| | EWA | black<br>metal grey | | | |
| | FGT | black<br>sport silver | | | |
| | FGU | graphite grey<br>sport silver | | | |
| | FGV | savanna<br>sport silver | | | |
| | FGW | metropole blue<br>sport silver | | | |
| | FGX | nephrite green<br>sport silver | 03 | | |
| | FGY | boxster red<br>sport silver | | | |
| | FGZ | cinnamon brown<br>sport silver | | | |
| | VSW | dark grey/natural<br>sport silver | | | |
| | VSX | brown/natural<br>sport silver | | | |
| (7) | 986 424 981 05 | gearshift knob | 01- | 1 | M 481/X97 |
| | VRJ | black | | | |
| | C50 | graphite grey | | | |
| | S30 | savanna | | | |
| | G10 | metropole blue | | | |
| | J30 | nephrite green | -03 | | |
| | M30 | boxster red | | | |
| | P11 | cinnamon brown | | | |
| | D11 | dark grey/natural | | | |

| Pos | Part Number | Description | Remark | Qty | Model |
|---|---|---|---|---|---|
| | T11 | brown/natural | | | |
| (7) | 986 424 981 06 | gearshift knob | 01- | 1 | M 481/XE8 |
| | VRJ | black | | | |
| | C50 | graphite grey | | | |
| | S30 | savanna | | | |
| | G10 | metropole blue | | | |
| | J30 | nephrite green | -03 | | |
| | M30 | boxster red | | | |
| | P11 | cinnamon brown | | | |
| | D11 | dark grey/natural | | | |
| | T11 | brown/natural | | | |
| (7) | 986 424 981 07 | gearshift knob | 01- | 1 | M 481/X47 |
| | VRJ | black | | | |
| | C50 | graphite grey | | | |
| | S30 | savanna | | | |
| | G10 | metropole blue | | | |
| | J30 | nephrite green | -03 | | |
| | M30 | boxster red | | | |
| | P11 | cinnamon brown | | | |
| | D11 | dark grey/natural | | | |
| | T11 | brown/natural | | | |
| 8 | 900 378 152 09 | hexagon-head bolt<br>M 6 X 20 | | 2 | |
| 9 | 986 424 049 01 | safety clip<br>F >>98VS6 05644 | | 2 | |
| - | A 000 043 203 82 | cotter pin<br>2 X 25<br>F >>98VS6 05644 | | 4 | |
| - | 900 021 055 00 | cotter pin<br>2 X 25<br>F >>98VS6 05644 | | 4 | |
| 10 | 996 424 145 00 | fastening part<br>for<br>cable<br>adjustable | -99 | 1 | |
| (10) | 996 424 145 01 | fastening part<br>for<br>cable<br>adjustable | 00- | 1 | |
| - | 996 424 445 00 | clip<br>for<br>fastening part | | 1 | |
| 11 | 996 424 147 00 | fastening part<br>for<br>cable<br>adjustable | | 1 | |
| 12 | 986 424 165 02 | support<br>for<br>cable | | 1 | |
| (12) | 986 424 166 04 | support<br>for<br>cable | 00- | 1 | M 008 |
| 13 | U 986 424 913 05 | linkage<br>adjustable<br>F >>98VS6 05644 | | 1 | |
| (13) | 986 424 913 06 | linkage<br>adjustable<br>F 98VS6 05645>> | | 1 | |
| | | use also:<br>F >>98VS6 05644<br>986.424.041.07 | | 1<br>1 | |
| (13) | U 986 424 913 07 | linkage<br>adjustable | | 1 | |
| 14 | 900 075 085 02 | hexagon-head bolt<br>M 8 X 20 | | 2 | |
| 15 | 986 424 135 00 | cap | | 1 | |
| 16 | 986 424 049 00 | safety clip | | 1 | |
| 17 | U 986 424 931 05 | joint rod<br>adjustable<br>F >>98VS6 05644 | | 1 | |
| (17) | 986 424 931 06 | joint rod<br>adjustable<br>F 98VS6 05645>> | | 1 | |

| Pos | Part Number | Description | Remark | Qty | Model |
|---|---|---|---|---|---|
| | | use also:<br>F >>98VS6 05644<br>986.424.041.07<br>986.424.913.06 | | <br><br>1<br>1 | |
| (17) | U 986 424 931 07 | joint rod<br>adjustable | | 1 | |
| 18 | N 901 239 02 | hexagon-head bolt<br>M 8 X 26 | | 1 | |
| 19 | 999 073 209 09 | pan-head screw<br>M 10 X 20 | | 2 | |
| 20 | 986 424 133 00 | washer | | 2 | |
| 21 | 000 043 205 93 | grease<br>1 100-gramme tube | | X | |

| Pos | Part Number | Description | Remark | Qty | Model |
|---|---|---|---|---|---|

| Model | Year | MG | SG | Illustration | Restrictions | UPD | 18:23 | 30.07.2008 | PET |
|---|---|---|---|---|---|---|---|---|---|
| 986 | 2004 | 7 | 01 | 701-01 | | 229 | | | |

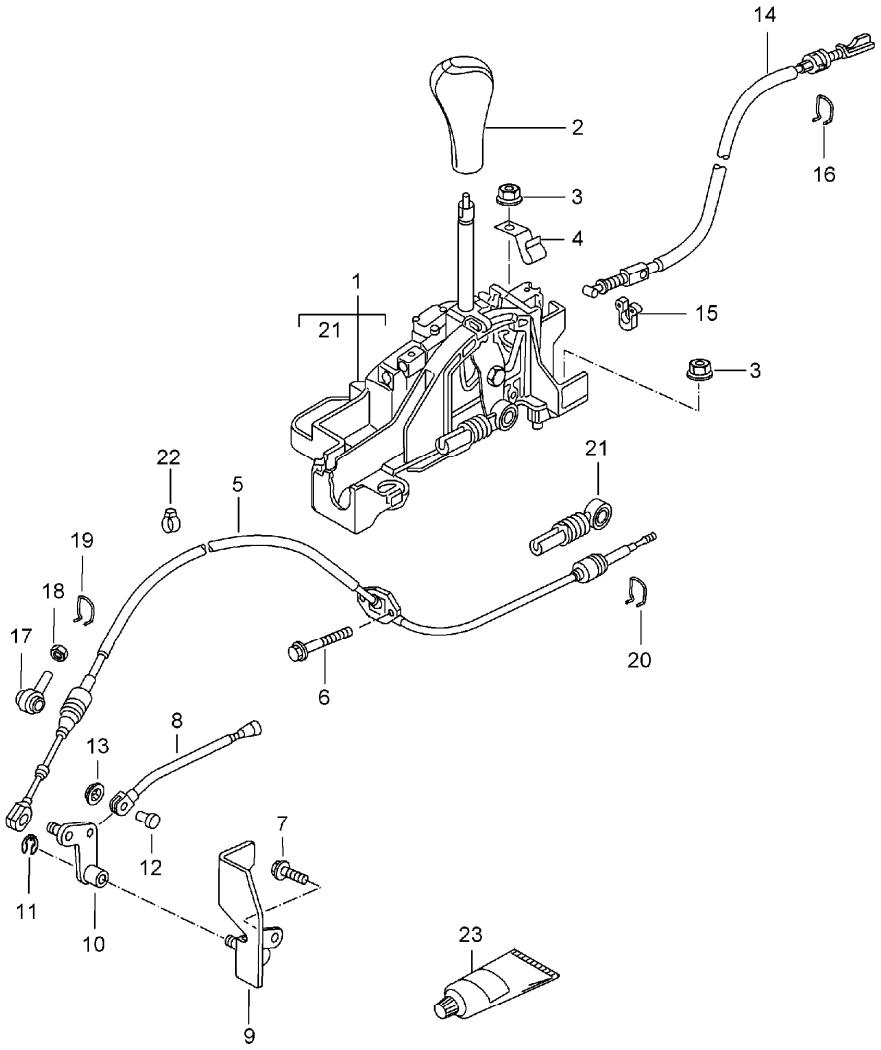


| Pos | Part Number | Description | Remark | Qty | Model |
|---|---|---|---|---|---|
| | | selector lever tiptronic | | | |
| 1 | A 996 426 011 04 | selector lever with housing | | 1 | |
| (1) | 996 426 011 07 | selector lever with housing | -99 | 1 | |
| (1) | 996 426 011 08 | selector lever with housing | 00- | 1 | |
| - | 996 613 023 00 | switch selector lever | | 1 | |
| - | 996 624 223 00 | solenoid selector lever | | 1 | |
| 2 | A 996 426 069 04 | gearshift knob | | 1 | |
| | 8YR | black | | | |
| (2) | A 996 426 069 05 | gearshift knob | | 1 | |
| | 8YR | black | | | |
| (2) | 996 426 069 05 | gearshift knob | 97 | 1 | |
| | EKQ | black | | | |
| (2) | 996 426 069 05 | gearshift knob | 98- | 1 | M 016 |
| | EKQ | black | | | |
| (2) | 996 426 069 06 | gearshift knob | | 1 | |
| | EMN | turquoise metallic | 98- | | M 011 |
| | EMO | zenith blue metallic | 98- | | M 011 |
| | EMP | metal grey | 98- | | M 012 |
| (2) | 996 426 069 08 | gearshift knob | 99- | 1 | M 010 |
| | EOL | amber/black | | | |
| (2) | 996 426 069 09 | gearshift knob | 00 | 1 | |
| | ERB | black/silver | 00 | | |
| | EOO | silver-black | | | M 012 |
| (2) | 996 426 069 10 | gearshift knob | 02 | 1 | |

| Pos | Part Number | Description | Remark | Qty | Model |
|---|---|---|---|---|---|
| | ERB | black/silver | | | |
| | EOO | silver-black | | | |
| (2) | 996 426 069 10 | gearshift knob | 03- | 1 | |
| | FGJ | black<br>sport silver | | | |
| | FGK | graphite grey<br>sport silver | | | |
| | FGL | savanna<br>sport silver | | | |
| | FGM | metropole blue<br>sport silver | | | |
| | FGN | nephrite green<br>sport silver | 03 | | |
| | FGO | boxster red<br>sport silver | | | |
| | FGQ | black/metal grey<br>sport silver | | | |
| | FGP | cinnamon brown<br>sport silver | | | |
| | VSU | dark grey/natural<br>sport silver | | | |
| | VSV | brown/natural<br>sport silver | | | |
| (2) | 996 426 069 10 | gearshift knob | 04 | 1 | M 091 |
| | FKN | cocoa<br>sport silver | | | |
| | FKO | dark grey/natural<br>sport silver | | | |
| - | A 996 426 275 01 | key | -99 | 1 | |
| | A01 | black | | | |
| (2) | 996 426 981 06 | gearshift knob | 01-02 | 1 | X46 |
| | 8YR | black | | | |
| | VRJ | black | | | |
| | C50 | graphite grey | | | |
| | S30 | savanna | | | |
| | G10 | metropole blue | | | |
| | J30 | nephrite green | | | |
| | M30 | boxster red | | | |
| | P11 | cinnamon brown | | | |
| | D11 | dark grey/natural | | | |
| | T11 | brown/natural | | | |
| (2) | 996 426 981 11 | gearshift knob | 03- | 1 | X46 |
| | VRJ | black | | | |
| | C50 | graphite grey | | | |
| | S30 | savanna | | | |
| | G10 | metropole blue | | | |
| | J30 | nephrite green | 03 | | |
| | M30 | boxster red | | | |
| | P11 | cinnamon brown | | | |
| | D11 | dark grey/natural | | | |
| | T11 | brown/natural | | | |
| (2) | 996 426 981 08 | gearshift knob | 01-02 | 1 | X66 |
| (2) | 996 426 981 09 | gearshift knob | 01-02 | 1 | X48 |
| (2) | 996 426 981 13 | gearshift knob | 03- | 1 | X66 |
| (2) | 996 426 981 14 | gearshift knob | 03- | 1 | X48 |
| - | 000 043 204 51 | repair kit<br>comprising:<br>key<br>996.426.275.01 A01<br>compression spring<br>996.426.277.02<br>roller<br>321.713.137 | -99 | 1 | |
| - | 000 043 204 49 | repair kit<br>comprising:<br>key<br>996.426.275.02 V01<br>compression spring<br>996.426.277.02<br>roller<br>321.713.137 | 00- | 1 | |

| Pos | Part Number | Description | Remark | Qty | Model |
|---|---|---|---|---|---|
| - | 000 043 204 50 | repair kit | 01 | 1 | X 46/X 48 X 66 |
| | | | 02 | 1 | X 46/X 48 X 66 |
| | | comprising: | | | |
| | | key | | | |
| | | compression spring | | | |
| | | 996.426.277.02 | | | |
| | | roller | | | |
| | | 321.713.137 | | | |
| - | 000 043 204 57 | repair kit | 02 | 1 | |
| | | comprising: | | | |
| | | key | | | |
| | | 996.426.275.05 V01 | | | |
| | | compression spring | | | |
| | | 996.426.277.02 | | | |
| | | roller | | | |
| | | 321.713.137 | | | |
| - | 000 043 204 69 | repair kit | 03- | 1 | |
| | | comprising: | | | |
| | | key | | | |
| | | 996.426.275.05 V03 | | | |
| | | compression spring | | | |
| | | 996.426.277.02 | | | |
| | | roller | | | |
| | | 321.713.137 | | | |
| - | 996 426 285 00 | fixing clip | | 1 | |
| 3 | 999 084 629 09 | hexagon nut | | 4 | |
| | | M 6 | | | |
| 4 | 999 507 465 02 | cable holder | | 2 | |
| 5 | 986 426 033 02 | cable | | 1 | |
| | | F >>98WS6 02046 | | | |
| (5) | 986 426 033 03 | cable | -01 | 1 | |
| | | F 98WS6 02047>> | | | |
| | | F >>981U6 00356 | | | |
| | | F >>981U6 40435 | | | |
| | | F >>981S6 00309 | | | |
| | | F >>981S6 40254 | | | |
| (5) | 986 426 033 04 | cable | 01 | 1 | |
| | | F 981U6 00357>> | | | |
| | | F 981U6 40436>> | | | |
| | | F 981S6 00310>> | | | |
| | | F 981S6 40255>> | | | |
| (5) | 986 426 033 05 | cable | 02- | 1 | |
| - | 987 424 211 01 | support | | 1 | |
| | | for | | | |
| | | cable | | | |
| 6 | 900 378 152 09 | hexagon-head bolt | | 2 | |
| | | M 6 X 20 | | | |
| 7 | 999 073 094 09 | oval-head screw | | 2 | |
| | | M 8 X 20 | | | |
| 8 | 986 426 043 01 | push rod | | 1 | |
| 9 | 986 426 041 05 | plate | | 1 | |
| | | F >>981U6 00356 | | | |
| | | F >>981S6 00309 | | | |
| (9) | 986 426 041 06 | plate | 00- | 1 | M 008 |
| | | F >>981U6 40435 | | | |
| | | F >>981S6 40254 | | | |
| (9) | 986 426 041 06 | plate | | 1 | |
| | | F 981U6 00357>> | | | |
| | | F 981U6 40436>> | | | |
| | | F 981S6 00310>> | | | |
| | | F 981S6 40255>> | | | |
| 10 | A 986 426 045 03 | reverse lever | | 1 | |
| (10) | A 986 426 045 04 | reverse lever | | 1 | |
| (10) | 986 426 045 05 | reverse lever | | 1 | |
| | | F >>981U6 00356 | | | |
| | | F >>981U6 40435 | | | |
| | | F >>981S6 00309 | | | |
| | | F >>981S6 40254 | | | |
| (10) | 986 426 045 06 | reverse lever | | 1 | |
| | | F 981U6 00357>> | | | |
| | | F 981U6 40436>> | | | |
| | | F 981S6 00310>> | | | |
| | | F 981S6 40255>> | | | |
| 11 | 900 116 007 09 | lock | | 1 | |
| 12 | 986 426 415 02 | bolt | | 1 | |
| 13 | 999 507 057 02 | lock | | 1 | |
| 14 | 996 426 073 03 | cable | | 1 | |
| 15 | 996 426 181 00 | clip | | 1 | |
| 16 | 996 426 711 00 | securing clip | | 1 | |
| 17 | 996 426 380 00 | connecting piece | | 1 | |
| | | F 98WS6 02047>> | | | |
| | | F >>981U6 00356 | | | |
| | | F >>981U6 40435 | | | |
| | | F >>981S6 00309 | | | |
| | | F >>981S6 40254 | | | |

| Pos | Part Number | Description | Remark | Qty | Model |
|---|---|---|---|---|---|
| (17) | 986 426 380 01 | connecting piece<br>F 981U6 00357>><br>F 981U6 40436>><br>F 981S6 00310>><br>F 981S6 40255>> | 01 | 1 | |
| (17) | 986 426 380 02 | connecting piece | 02- | 1 | |
| 18 | 900 076 010 02 | hexagon nut<br>M 6<br>F 98WS6 02047>> | | 1 | |
| 19 | 996 426 335 00 | securing clip | | 1 | |
| 20 | 996 426 335 01 | securing clip | | 1 | |
| 21 | 996 426 035 00 | fastening part | | 1 | |
| 22 | 999 507 635 00 | fixing clip | | 1 | |
| 23 | 000 043 205 93 | grease<br>1 100-gramme tube | | X | |

| Pos | Part Number | Description | Remark | Qty | Model |
|---|---|---|---|---|---|

| Model | Year | MG | SG | Illustration | Restrictions | UPD | 18:23 | 30.07.2008 | PET |
|---|---|---|---|---|---|---|---|---|---|
| 986 | 2004 | 7 | 01 | 701-05 | | 229 | | | |

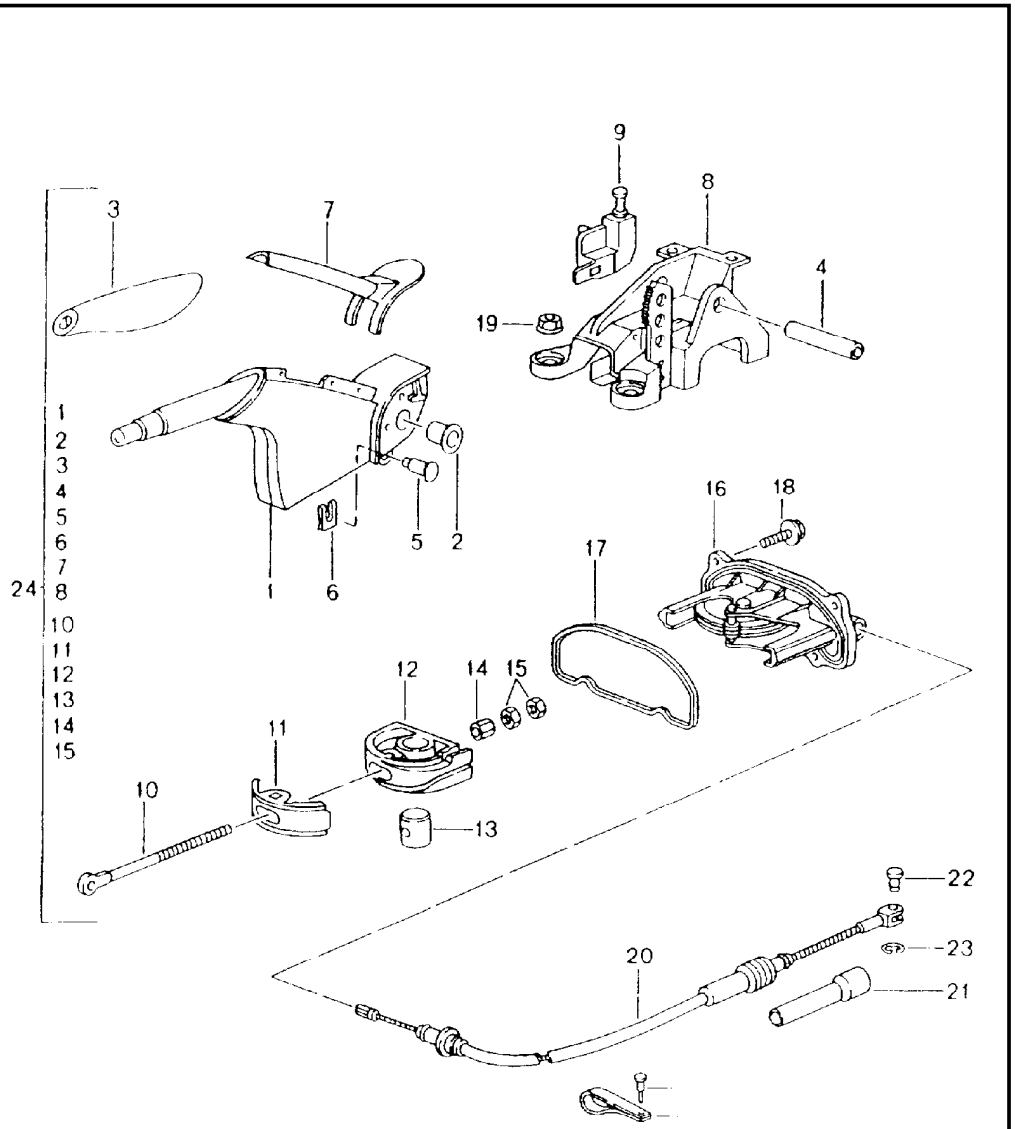


| Pos | Part Number | Description | Remark | Qty | Model |
|---|---|---|---|---|---|
| | | handbrake actuator | | | |
| 1 | U 996 424 053 01 | parking-brake lever | | 1 | |
| | EBS | black | | | |
| 2 | U 996 424 573 01 | bush | | 2 | |
| 3 | U 996 424 251 01 | cover | | 1 | |
| | 8YR | black | | | |
| 4 | U 996 424 571 01 | bearing tube | | 1 | |
| 5 | 996 424 569 01 | bolt | | 1 | |
| 6 | 999 166 079 02 | lock<br>SLB 6 | | 1 | |
| 7 | 986 424 155 00 | cover | | 1 | |
| | B12 | black | | | |
| (7) | 996 424 155 01 | cover | 98- | 1 | M 012 |
| | C02 | metal grey | 99- | | M 010 |
| (7) | 996 424 155 01 | cover | 00- | 1 | |
| | A03 | black | | | |
| | C02 | metal grey | 01- | | |
| (7) | 996 424 155 02 | cover | 04 | 1 | M 091 |
| | M7Z | silver metallic | | | |
| (7) | 986 424 155 00 | cover | 98- | 1 | M 016/011 |
| | B12 | black-grey | | | |
| (7) | 996 424 155 01 | cover | 01-<br>01-<br>01- | 1<br>1<br>1 | X98<br>X58<br>XE9 |
| | A03 | black | | | |
| | C02 | metal grey | | | |
| 8 | U 996 424 161 01 | bracket | | 1 | |
| 9 | 996 613 112 01 | switch | | 1 | |
| 10 | 996 424 567 01 | pull rod | | 1 | |
| 11 | 964 424 570 00 | securing clip | | 1 | |

| Pos | Part Number | Description | Remark | Qty | Model |
|---|---|---|---|---|---|
| 12 | 964 424 568 00 | turnbuckle | | 1 | |
| 13 | 996 424 574 00 | nipple | | 1 | |
| 14 | 996 424 572 00 | bush | | 1 | |
| 15 | 900 076 025 02 | hexagon nut<br>M 8 | | 2 | |
| 16 | 986 424 310 02 | housing | | 1 | |
| 17 | 986 424 480 02 | gasket | | 1 | |
| 18 | 900 378 035 01 | hexagon-head bolt<br>M 6 X 16 | | 4 | |
| 19 | 900 380 005 09 | hexagon nut<br>M 8 | | 2 | |
| 20 | 986 424 141 03 | parking-brake cable | -00 | 2 | |
| (20) | 986 424 141 04 | parking-brake cable | 01- | 2 | |
| 21 | 986 424 721 06 | guide tube | -00 | 2 | |
| (21) | 986 424 721 07 | guide tube | 01- | 2 | |
| 22 | 986 352 739 02 | bolt | | 2 | |
| 23 | 900 116 004 09 | lock washer<br>B 5 | | 2 | |
| 24 | 986 424 031 00 | parking-brake lever<br>complete | | 1 | |
| | EBP | black | | | |
| (24) | 986 424 031 00 | parking-brake lever<br>complete | 98- | 1 | M 016 |
| | EBP | black | | | |
| (24) | 986 424 031 01 | parking-brake lever<br>complete | 98- | 1 | M 016/011 |
| | EBP | black | | | |
| (24) | 996 424 031 04 | parking-brake lever<br>complete | 99- | 1 | M 010 |
| | EKH | black/granite | | | |
| (24) | 996 424 031 04 | parking-brake lever<br>complete | 98- | 1 | M 012 |
| | EMH | metal grey/black | | | |
| (24) | 996 424 031 05 | parking-brake lever<br>complete | 00 | 1 | |
| | EUK | black | | | |
| | EPR | black/metal grey | | | M 012 |
| (24) | 996 424 031 06 | parking-brake lever<br>complete | 01-02 | 1 | |
| | EUK | black | | | |
| | EPR | black/metal grey | | | |
| (24) | 996 424 031 07 | parking-brake lever<br>complete | 03- | 1 | |
| | FFR | black<br>sport silver | | | |
| | FHD | graphite grey<br>sport silver | | | |
| | FHF | metropole blue<br>sport silver | | | |
| | FHE | savanna<br>sport silver | | | |
| | FHG | nephrite green<br>sport silver | 03 | | |
| | FHJ | boxster red<br>sport silver | | | |
| | FHK | cinnamon brown<br>sport silver | | | |
| | VSR | dark grey/natural<br>sport silver | | | |
| | VST | brown/natural<br>sport silver | | | |
| | FGR | black/metal grey<br>sport silver | | | |
| (24) | 996 424 031 08 | parking-brake lever<br>complete | 04 | 1 | M 091 |
| | EVY | cocoa | | | |
| | VSZ | dark grey/natural | | | |
| (24) | 996 424 980 22 | parking-brake lever<br>complete | /LL01-02 | 1 | X98 |

| Pos | Part Number | Description | Remark | Qty | Model |
|---|---|---|---|---|---|
| | VRJ | black | | | |
| | C50 | graphite grey | | | |
| | S30 | savanna | | | |
| | G10 | metropole blue | | | |
| | J30 | nephrite green | | | |
| | M30 | boxster red | | | |
| | P11 | cinnamon brown | | | |
| | D11 | dark grey/natural | | | |
| | T11 | brown/natural | | | |
| (24) | 996 424 980 23 | parking-brake lever complete | /RL01-02 | 1 | X98 |
| | VRJ | black | | | |
| | C50 | graphite grey | | | |
| | S30 | savanna | | | |
| | G10 | metropole blue | | | |
| | J30 | nephrite green | | | |
| | M30 | boxster red | | | |
| | P11 | cinnamon brown | | | |
| | D11 | dark grey/natural | | | |
| | T11 | brown/natural | | | |
| (24) | 996 424 980 24 | parking-brake lever complete | /LL01-02 | 1 | X58 |
| | VRJ | black | | | |
| | C50 | graphite grey | | | |
| | S30 | savanna | | | |
| | G10 | metropole blue | | | |
| | J30 | nephrite green | | | |
| | M30 | boxster red | | | |
| | P11 | cinnamon brown | | | |
| | D11 | dark grey/natural | | | |
| | T11 | brown/natural | | | |
| (24) | 996 424 980 25 | parking-brake lever complete | /RL01-02 | 1 | X58 |
| | VRJ | black | | | |
| | C50 | graphite grey | | | |
| | S30 | savanna | | | |
| | G10 | metropole blue | | | |
| | J30 | nephrite green | | | |
| | M30 | boxster red | | | |
| | P11 | cinnamon brown | | | |
| | D11 | dark grey/natural | | | |
| | T11 | brown/natural | | | |
| (24) | 996 424 980 28 | parking-brake lever complete | /LL01-02 | 1 | XE9 |
| | VRJ | black | | | |
| | C50 | graphite grey | | | |
| | S30 | savanna | | | |
| | G10 | metropole blue | | | |
| | J30 | nephrite green | | | |
| | M30 | boxster red | | | |
| | P11 | cinnamon brown | | | |
| | D11 | dark grey/natural | | | |
| | T11 | brown/natural | | | |
| (24) | 996 424 980 29 | parking-brake lever complete | /RL01-02 | 1 | XE9 |
| | VRJ | black | | | |
| | C50 | graphite grey | | | |
| | S30 | savanna | | | |
| | G10 | metropole blue | | | |
| | J30 | nephrite green | | | |

| Pos | Part Number | Description | Remark | Qty | Model |
|---|---|---|---|---|---|
| | M30 | boxster red | | | |
| | P11 | cinnamon brown | | | |
| | D11 | dark grey/natural | | | |
| | T11 | brown/natural | | | |
| (24) | 996 424 980 38 | parking-brake lever complete | /LL 03- | 1 | X98 |
| | VRJ | black | | | |
| | C50 | graphite grey | | | |
| | S30 | savanna | | | |
| | G10 | metropole blue | | | |
| | J30 | nephrite green | 03 | | |
| | M30 | boxster red | | | |
| | P11 | cinnamon brown | | | |
| | D11 | dark grey/natural | | | |
| | T11 | brown/natural | | | |
| (24) | 996 424 980 39 | parking-brake lever complete | /RL 03- | 1 | X98 |
| | VRJ | black | | | |
| | C50 | graphite grey | | | |
| | S30 | savanna | | | |
| | G10 | metropole blue | | | |
| | J30 | nephrite green | 03 | | |
| | M30 | boxster red | | | |
| | P11 | cinnamon brown | | | |
| | D11 | dark grey/natural | | | |
| | T11 | brown/natural | | | |
| (24) | 996 424 980 50 | parking-brake lever complete | /LL 03- | 1 | X58 |
| | VRJ | black | | | |
| | C50 | graphite grey | | | |
| | S30 | savanna | | | |
| | G10 | metropole blue | | | |
| | J30 | nephrite green | 03 | | |
| | M30 | boxster red | | | |
| | P11 | cinnamon brown | | | |
| | D11 | dark grey/natural | | | |
| | T11 | brown/natural | | | |
| (24) | 996 424 980 51 | parking-brake lever complete | /RL 03- | 1 | X58 |
| | VRJ | black | | | |
| | C50 | graphite grey | | | |
| | S30 | savanna | | | |
| | G10 | metropole blue | | | |
| | J30 | nephrite green | 03 | | |
| | M30 | boxster red | | | |
| | P11 | cinnamon brown | | | |
| | D11 | dark grey/natural | | | |
| | T11 | brown/natural | | | |
| (24) | 996 424 980 46 | parking-brake lever complete | /LL 03- | 1 | XE9 |
| | VRJ | black | | | |
| | C50 | graphite grey | | | |
| | S30 | savanna | | | |
| | G10 | metropole blue | | | |
| | J30 | nephrite green | 03 | | |
| | M30 | boxster red | | | |
| | P11 | cinnamon brown | | | |
| | D11 | dark grey/natural | | | |
| | T11 | brown/natural | | | |

| Pos | Part Number | Description | Remark | Qty | Model |
|---|---|---|---|---|---|
| (24) | 996 424 980 47 | parking-brake lever complete | /RL 03- | 1 | XE9 |
| | VRJ | black | | | |
| | C50 | graphite grey | | | |
| | S30 | savanna | | | |
| | G10 | metropole blue | | | |
| | J30 | nephrite green | 03 | | |
| | M30 | boxster red | | | |
| | P11 | cinnamon brown | | | |
| | D11 | dark grey/natural | | | |
| | T11 | brown/natural | | | |
| - | 986 424 201 01 | retaining strap parking-brake cable | | 2 | |
| - | 999 190 435 30 | blind rivet retaining strap | | 2 | |

| Pos | Part Number | Description | Remark | Qty | Model |
|---|---|---|---|---|---|

| Model | Year | MG | SG | Illustration | Restrictions | UPD | 18:24 | 30.07.2008 | PET |
|---|---|---|---|---|---|---|---|---|---|
| 986 | 2004 | 7 | 02 | 702-00 | | 229 | | | |

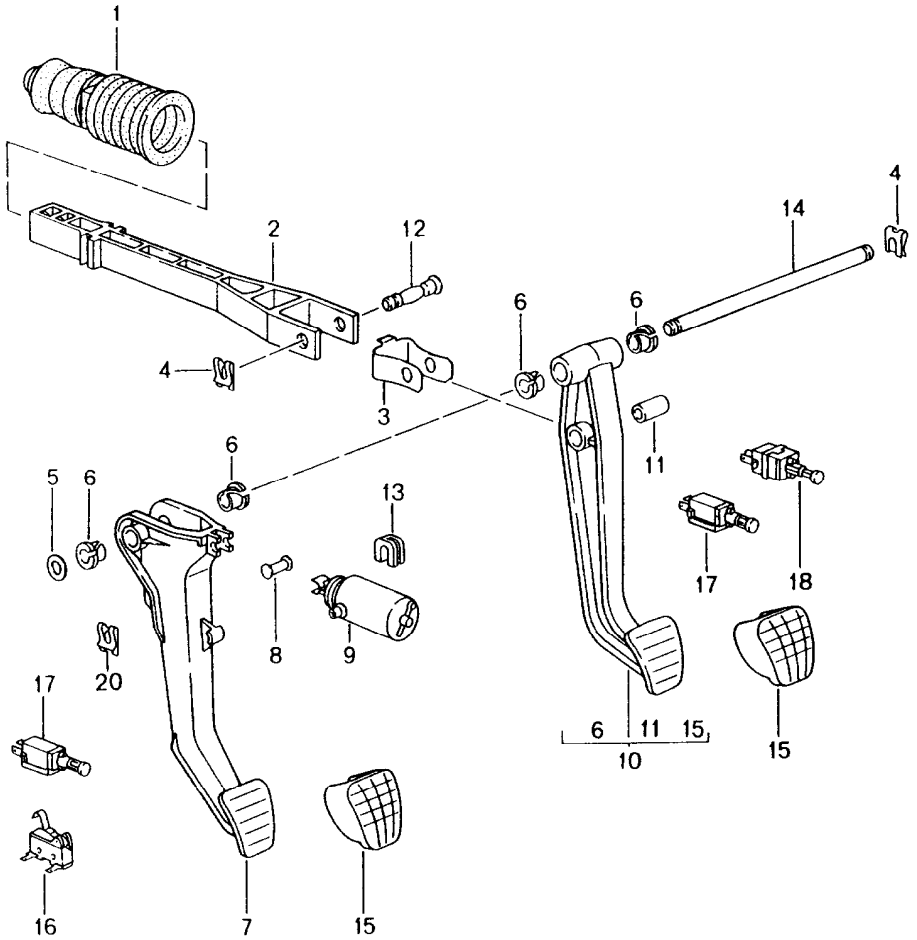


| Pos | Part Number | Description | Remark | Qty | Model |
|---|---|---|---|---|---|
| | | pedals | 97 | | |
| | | see technical manual<br>46 05 19<br>30 05 19 | | | |
| - | 000 043 203 37 | grease<br>OPTITEMP LG2 | | X | |
| 1 | ... ... ... .. | bellows<br>see illustrations<br>6/04/00 | | 1 | |
| 2 | U 996 423 165 03 | push rod<br>see technical information<br>group 4<br>NR.6/01 | | 1 | |
| (2) | 996 423 165 05 | push rod<br>see technical information<br>group 4<br>NR.6/01 | | 1 | |
| - | 999 166 075 02 | lock<br>push rod<br>brake booster | | 1 | |
| 3 | U 996 423 330 01 | clamp<br>group 4<br>NR.6/01 | | 1 | |
| 4 | 999 166 077 02 | lock | | 3 | M 481 |
| (4) | 999 166 077 02 | lock | | 2 | M 249 |
| 5 | 900 025 009 02 | washer | | X | M 481 |
| (5) | 999 025 265 40 | washer | | X | |
| 6 | 996 423 399 01 | bush | | 4 | M 481 |
| (6) | 996 423 399 01 | bush | | 2 | M 249 |
| 7 | A 996 423 139 05 | clutch pedal | | 1 | M 481 |
| (7) | A 996 423 139 06 | clutch pedal | | 1 | M 481 |
| (7) | 996 423 139 10 | clutch pedal | | 1 | M 481 |
| 8 | 996 423 313 01 | bolt<br>for<br>clutch power spring<br>986.423.081.07 | | 1 | M 481 |

| Pos | Part Number | Description | Remark | Qty | Model |
|---|---|---|---|---|---|
| (8) | 996 423 315 06 | bolt<br>for<br>clutch power spring<br>986.423.081.12<br>together with<br>996.423.139.06<br>996.423.139.10 | | 1 | M 481 |
| - | 999 166 075 02 | lock<br>for<br>bolt<br>996.423.315.06<br>together with<br>996.423.139.06 | | 1 | M 481 |
| - | 999 166 022 02 | lock<br>for<br>bolt<br>996.423.315.06<br>together with<br>996.423.139.10 | | 1 | M 481 |
| 9 | A 986 423 081 07 | clutch power spring | | 1 | M 481 |
| (9) | 986 423 081 12 | clutch power spring | | 1 | |
| 10 | U 996 423 091 00 | brake pedal<br>see technical information<br>group 4<br>NR.6/01 | /LL | 1 | M 481 |
| (10) | 996 423 091 03 | brake pedal<br>see technical information<br>group 4<br>NR.6/01 | /LL | 1 | M 481 |
| (10) | U 996 423 092 00 | brake pedal<br>see technical information<br>group 4<br>NR.6/01 | /RL | 1 | M 481 |
| (10) | 996 423 092 03 | brake pedal<br>see technical information<br>group 4<br>NR.6/01<br>use also:<br>bush<br>996.423.999.00 | /RL | 1<br><br><br><br>2 | M 481 |
| (10) | U 996 423 093 00 | brake pedal<br>see technical information<br>group 4<br>NR.6/01 | /LL | 1 | M 249 |
| (10) | 996 423 093 03 | brake pedal<br>see technical information<br>group 4<br>NR.6/01 | /LL | 1 | M 249 |
| (10) | U 996 423 094 00 | brake pedal<br>see technical information<br>group 4<br>NR.6/01 | /RL | 1 | M 249 |
| (10) | 996 423 094 03 | brake pedal<br>see technical information<br>group 4<br>NR.6/01<br>use also:<br>bush<br>996.423.999.00 | /RL | 1<br><br><br><br>2 | M 249 |
| 11 | U 999 924 120 00 | bush<br>see technical information<br>group 4<br>NR.6/01 | | 1 | |
| 12 | U 996 423 310 03 | bolt<br>see technical information<br>group 4<br>NR.6/01 | | 1 | |
| 13 | 996 423 581 00 | bush | | 2 | |
| 14 | 996 423 281 04 | axle | /LL | 1 | M 481 |
| (14) | 996 423 284 04 | axle | /RL | 1 | M 481 |
| (14) | 996 423 283 04 | axle | /LL | 1 | M 249 |
| (14) | 996 423 286 04 | axle | /RL | 1 | M 249 |
| - | 996 423 275 03 | cap nut<br>axle | | 1 | |
| 15 | 996 423 210 03 | pedal cap | | 2 | M 481 |
| (15) | 996 423 212 03 | pedal cap | | 1 | M 249 |
| 17 | 996 613 110 01 | switch | 97 | 2 | M 481/454 |
| (17) | 996 613 110 01 | switch | 97 | 1 | M 249/454 |
| 18 | 996 613 111 01 | switch | 97 | 1 | |
| 19 | 964 613 211 00 | kickdown switch | | 1 | M 249 |
| 20 | 999 166 077 02 | lock | | 1 | M 481 |

| Model | Year | MG | SG | Illustration | Restrictions | UPD | 18:24 | 30.07.2008 | PET |
|---|---|---|---|---|---|---|---|---|---|
| 986 | 2004 | 7 | 02 | 702-01 | | 229 | | | |

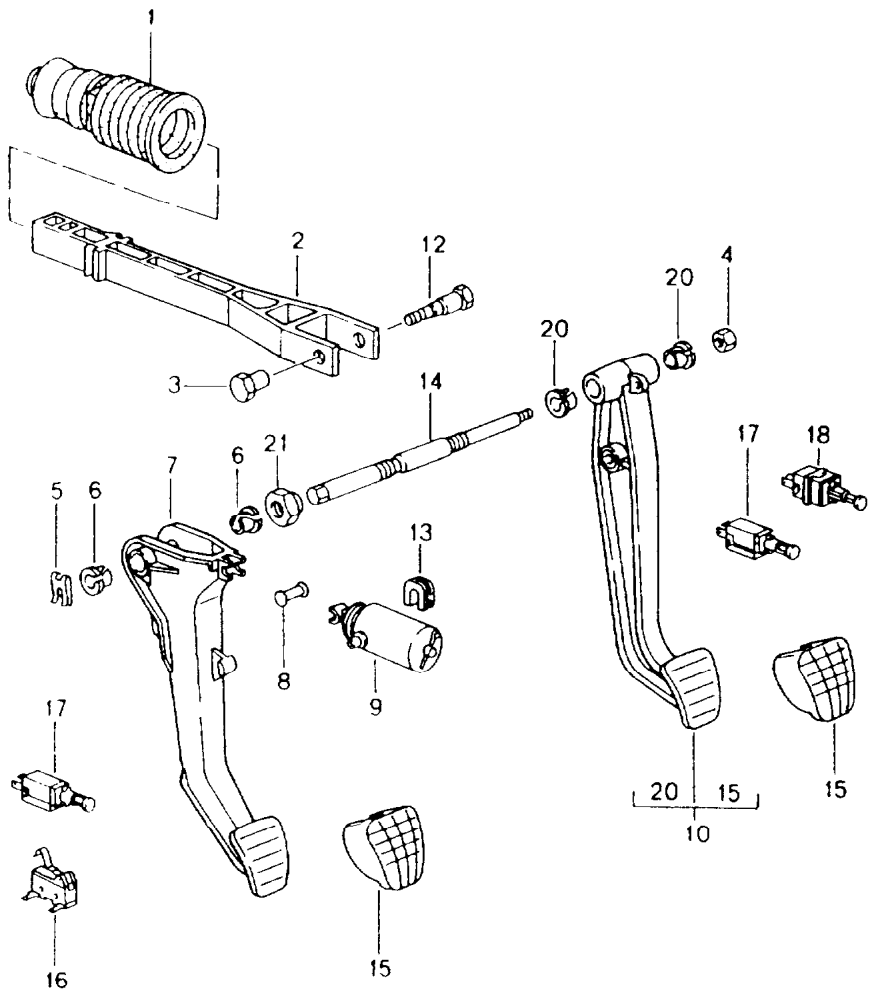


| Pos | Part Number | Description | Remark | Qty | Model |
|---|---|---|---|---|---|
| | | pedals | 98- | | |
| | | see technical manual<br>46 05 19<br>30 05 19 | | | |
| - | 000 043 203 37 | grease<br>OPTITEMP LG2 | | X | |
| 1 | ... ... ... .. | bellows<br>see illustrations<br>6/04/00 | | 1 | |
| 2 | U 996 423 165 04 | push rod<br>F >>98YS6 00434<br>F >>98YU6 00165<br>F >>98YS6 40520<br>F >>98YU6 40062<br>see technical information<br>group 4<br>NR.6/01 | | 1 | |
| (2) | 996 423 165 05 | push rod<br>F 98YS6 00435>><br>F 98YU6 00166>><br>F 98YS6 40521>><br>F 98YU6 40063>> | | 1 | |
| - | 999 166 075 02 | lock<br>push rod<br>brake booster | | 1 | |
| 3 | 996 423 307 00 | bush | | 1 | |
| 4 | 900 380 005 09 | hexagon nut<br>M 8 | | 3<br>2 | |
| 5 | 999 507 601 01 | lock | | 1 | M 481/480 |
| 6 | 996 423 399 01 | bush | | 2 | M 481/480 |
| 7 | A 996 423 139 08 | clutch pedal | 98 | 1 | M 481 |
| (7) | 996 423 139 09 | clutch pedal | -99 | 1 | M 481 |
| (7) | 996 423 139 10 | clutch pedal<br>use also:<br>986.423.881.06<br>996.423.081.12<br>996.423.315.06 | | 1<br>X<br>X<br>X | M 481/480<br>M 481<br>M 480 |
| 8 | 996 423 313 01 | bolt | -99 | 1 | M 481 |
| (8) | 996 423 315 06 | bolt | 00- | 1 | M 481/480 |

| Pos | Part Number | Description | Remark | Qty | Model |
|---|---|---|---|---|---|
| - | 999 166 022 02 | lock<br>for<br>bolt | 00- | 1 | M 481/480 |
| 9 | A 986 423 081 08 | clutch power spring | 98 | 1 | M 481 |
| (9) | 986 423 081 11 | clutch power spring<br>use also:<br>996.423.139.09/10<br>996.423.315.06 | -99 | 1 | M 481 |
| (9) | A 996 423 881 05 | clutch power spring | 00- | 1 | M 481 |
| (9) | A 996 423 881 06 | clutch power spring | -02 | 1 | M 481 |
| (9) | 996 423 081 15 | clutch power spring | 03 | 1 | M 481 |
| (9) | 996 423 081 18 | clutch power spring | 04 | 1 | M 481 |
| 9 | A 996 423 081 13 | clutch power spring | 00- | 1 | M 008 |
| (9) | 996 423 081 12 | clutch power spring<br>F >>982S6 40471<br>F >>982U6 41966 | 00- | 1 | M 008 |
| (9) | 996 423 081 14 | clutch power spring<br>F 982S6 40472>><br>F 982U6 41967>> | -02 | 1 | M 008 |
| (9) | 996 423 081 17 | clutch power spring | 03 | 1 | M 008 |
| (9) | 996 423 081 20 | clutch power spring | 04 | 1 | M 008 |
| - | A 986 423 571 00 | bracket<br>for<br>clutch power spring | | 1 | M 481 |
| - | 996 423 571 02 | bracket<br>for<br>clutch power spring | | 1 | |
| 10 | 996 423 091 03 | brake pedal | /LL | 1 | M 481/480 |
| (10) | 996 423 092 03 | brake pedal | /RL | 1 | M 481/480 |
| (10) | 996 423 093 03 | brake pedal | /LL | 1 | M 249 |
| (10) | 996 423 094 03 | brake pedal | /RL | 1 | M 249 |
| - | 996 423 277 00 | bearing sleeve<br>brake pedal | /RL | 1 | |
| - | 999 522 033 00 | return spring<br>brake pedal | | 2 | |
| - | 996 423 101 00 | protective tube<br>return spring<br>brake pedal | | 1 | |
| - | 996 423 243 00 | bush<br>return spring | 00- | 1 | |
| 12 | 996 423 308 00 | bolt | | 1 | |
| (12) | 996 423 581 00 | bush | | 1 | |
| 14 | 996 423 281 05 | axle | /LL | 1 | M 481/480 |
| (14) | 996 423 284 05 | axle | /RL | 1 | M 481/480 |
| (14) | 996 423 283 05 | axle | /LL | 1 | M 249 |
| (14) | 996 423 286 05 | axle | /RL | 1 | M 249 |
| 15 | 996 423 210 03 | pedal cap | | 2 | M 481/480 |
| (15) | 996 423 212 03 | pedal cap | | 1 | M 249 |
| 17 | 996 613 114 01 | switch | | 1 | M 481/454 |
| (17) | 996 613 113 01 | switch | | 1 | M 249/454 |
| 18 | 996 613 113 01 | switch | | 1 | |
| 19 | 964 613 211 00 | kickdown switch | | 1 | M 249 |
| 20 | 996 423 399 01 | bush | /LL | 2 | |
| (20) | 999 924 133 40 | bush | /RL | 2 | |
| 21 | A 996 423 275 04 | screw plug | -03 | 1 | |
| (21) | 996 423 275 05 | screw plug | 04- | 1 | |

| Model | Year | MG | SG | Illustration | Restrictions | UPD | 18:24 | 30.07.2008 |
|---|---|---|---|---|---|---|---|---|
| 986 | 2004 | 7 | 02 | 702-08 | | 229 | | |

PORSCHE PET PORSCHE

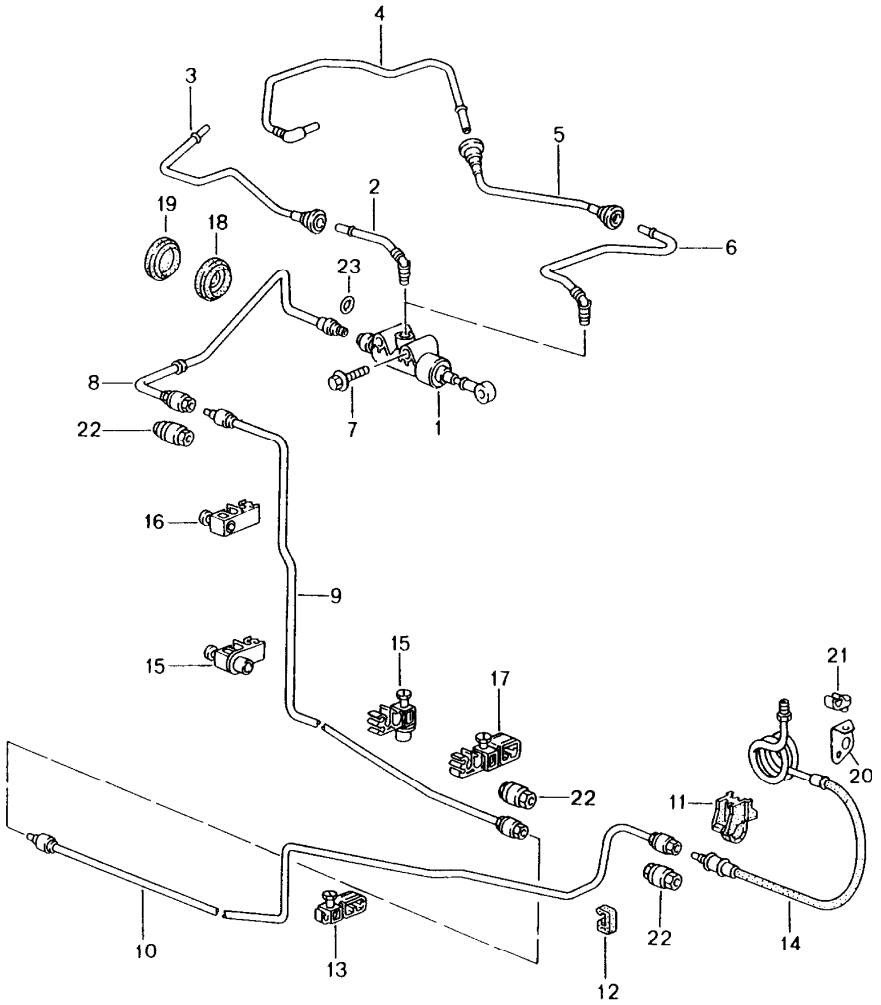


| Pos | Part Number | Description | Remark | Qty | Model |
|---|---|---|---|---|---|
| | | clutch actuation<br>clutch master cylinder<br>clutch pipeline | | | |
| 1 | A 996 423 171 04 | clutch master cylinder | | 1 | |
| (1) | A 996 423 171 05 | clutch master cylinder | -02 | 1 | |
| (1) | 996 423 171 06 | clutch master cylinder | 03- | 1 | |
| - | 996 423 614 00 | circlip<br>pressure line | | 1 | |
| - | 900 312 041 02 | bolt | 97 | 1 | |
| - | 996 423 315 06 | bolt | 98- | 1 | |
| - | 999 021 008 02 | safety clip<br>for<br>bolt | 97 | 1 | |
| - | 999 166 022 02 | safety clip<br>for<br>bolt | 98- | 1 | |
| 2 | 996 423 147 00 | feed line | /LL -02 | 1 | |
| (2) | 996 423 147 01 | feed line | /LL 03- | 1 | |
| 3 | 997 423 137 00 | feed line | /LL | 1 | |
| 4 | 996 423 138 02 | line | /RL 97 | 1 | |
| (4) | 996 423 138 03 | line | /RL 98- | 1 | |
| (4) | 996 423 138 04 | feed line | /RL 03- | 1 | |
| 5 | 996 423 140 01 | feed line<br>F >>98WS6 06100 | /RL | 1 | |
| (5) | 996 423 140 02 | feed line<br>F 98WS6 06101>> | /RL | 1 | |
| 6 | 996 423 142 00 | feed line<br>F >>98WS6 06100 | /RL | 1 | |
| (6) | 996 423 142 01 | feed line<br>F 98WS6 06101>> | /RL -02 | 1 | |
| (6) | 996 423 142 02 | feed line | /RL 03- | 1 | |
| 7 | 900 378 029 09 | hexagon-head bolt<br>M 6 X 40 | | 2 | |

| Pos | Part Number | Description | Remark | Qty | Model |
|---|---|---|---|---|---|
| 8 | 996 423 107 06 | clutch pipeline<br>see technical manual<br>group 3<br>NR.30-21 | /LL 97 | 1 | |
| - | 999 702 174 50 | grommet<br>see technical manual<br>group<br>NR.30-21 | /LL | X | |
| 8 | 996 423 107 10 | clutch pipeline | /LL 98- | 1 | |
| (8) | 996 423 108 02 | clutch pipeline | /RL 97 | 1 | |
| (8) | 996 423 108 10 | clutch pipeline | /RL 98- | 1 | |
| 9 | 996 423 109 07 | clutch pipeline<br>see technical manual<br>group<br>NR.30-21 | 97 | 1 | |
| (9) | 996 423 109 10 | clutch pipeline | 98- | 1 | |
| 10 | 986 423 113 08 | clutch pipeline<br>F >>98XS6 03069 | | 1 | |
| (10) | 986 423 113 25 | clutch pipeline<br>F 98XS6 03070>><br><br>use also:<br>F >>98XS6 03069<br>F >>98XS6 20221<br>8E0.721.257A | | 1 | |
| (10) | 986 423 113 08 | clutch pipeline | 00- | 1 | M 008 |
| 11 | 999 591 964 40 | support | | 1 | |
| 12 | 999 591 922 40 | support | | 1 | |
| 13 | 964 423 811 00 | support | | 1 | |
| 14 | 986 423 377 08 | clutch hose<br>F >>98XS6 03069 | | 1 | |
| (14) | 986 423 113 25 | clutch pipeline<br>F 98XS6 03070>><br><br>use also:<br>F >>98XS6 03069<br>8E0.721.257A | | 1 | |
| (14) | 986 423 377 11 | clutch hose | 00- | 2 | M 008 |
| 15 | 996 355 549 00 | support | | 2 | |
| 16 | 996 355 545 00 | support | | 3 | |
| 17 | 996 355 543 00 | support | | 1 | |
| 18 | A 999 702 216 41 | grommet | | 1 | M 481 |
| (18) | 999 702 216 42 | grommet | | 1 | |
| 19 | 999 702 217 41 | grommet | | 1 | M 249 |
| 20 | 986 423 777 00 | support<br>F >>98XS6 03069 | | 1 | |
| (20) | 986 423 677 25 | support<br>F 98XS6 03070>> | | 1 | |
| (20) | A 986 423 777 10 | bracket | | 1 | |
| (20) | 996 423 777 01 | support | | 1 | |
| 21 | 999 507 586 40 | bracket | | 1 | |
| 22 | A 999 230 522 10 | threaded joint | | 1 | |
| (22) | 999 230 541 10 | threaded joint | | 1 | |
| - | 999 230 685 40 | circlip<br>for<br>threaded joint | | 3 | |
| 23 | 999 707 333 40 | o-ring | | 1 | |

| Model | Year | MG | SG | Illustration | Restrictions | UPD | 18:24 | 30.07.2008 | PET |
|---|---|---|---|---|---|---|---|---|---|
| 986 | 2004 | 7 | 02 | 702-10 | | 229 | | | |

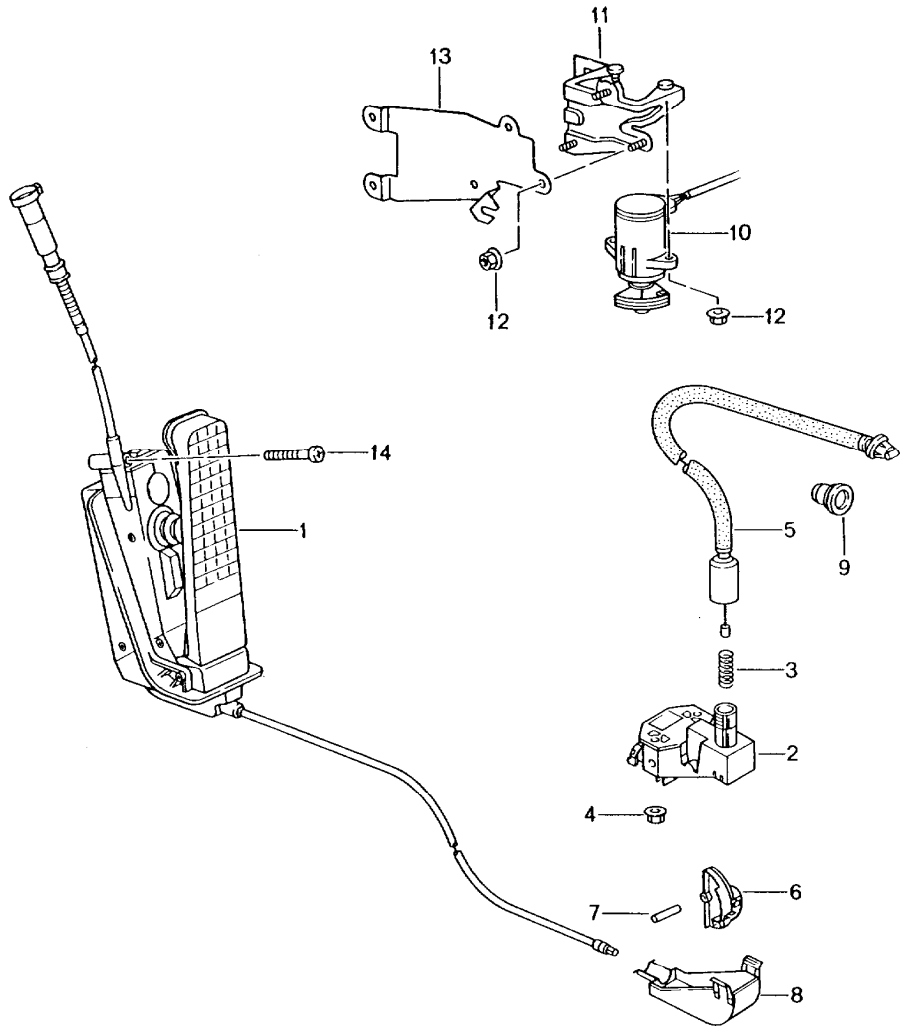


| Pos | Part Number | Description | Remark | Qty | Model |
|---|---|---|---|---|---|
| | | pedals<br>accelerator control | | | |
| 1 | A 986 423 021 06 | accelerator control | /LL | 1 | M 481 |
| (1) | 986 423 021 07 | accelerator control | /LL 97 | 1 | M 481 |
| (1) | 986 423 021 08 | accelerator control | /LL 98- | 1 | M 481 |
| (1) | A 986 423 022 06 | accelerator control | /RL | 1 | M 481 |
| (1) | 986 423 022 07 | accelerator control | /RL 97 | 1 | M 481 |
| (1) | 986 423 022 08 | accelerator control | /RL 98- | 1 | M 481 |
| (1) | A 986 423 023 06 | accelerator control | /LL | 1 | M 249 |
| (1) | 986 423 023 07 | accelerator control | /LL 97 | 1 | M 249 |
| (1) | 986 423 023 08 | accelerator control | /LL 98- | 1 | M 249 |
| (1) | A 986 423 024 06 | accelerator control | /RL | 1 | M 249 |
| (1) | 986 423 024 07 | accelerator control | /RL 97 | 1 | M 249 |
| (1) | 986 423 024 08 | accelerator control | /RL 98- | 1 | M 249 |
| (1) | A 986 423 025 06 | accelerator control | /LL | 1 | M 481/454 |
| (1) | 986 423 025 07 | accelerator control | /LL 97 | 1 | M 481/454 |
| (1) | 986 423 025 08 | accelerator control | /LL 98- | 1 | M 481/454 |
| (1) | A 986 423 026 06 | accelerator control | /RL | 1 | M 481/454 |
| (1) | 986 423 026 07 | accelerator control | /RL 97 | 1 | M 481/454 |
| (1) | 986 423 026 08 | accelerator control | /RL 98- | 1 | M 481/454 |
| (1) | A 986 423 027 06 | accelerator control | /LL | 1 | M 249/454 |
| (1) | 986 423 027 07 | accelerator control | /LL 97 | 1 | M 249/454 |
| (1) | 986 423 027 08 | accelerator control | /LL 98- | 1 | M 249/454 |
| (1) | A 986 423 028 06 | accelerator control | /RL | 1 | M 249/454 |
| (1) | 986 423 028 07 | accelerator control | /RL 97 | 1 | M 249/454 |
| (1) | 986 423 028 08 | accelerator control | /RL 98- | 1 | M 249/454 |
| (1) | 996 423 019 02 | accelerator control | /LL -02 | 1 | M 480/481<br>M 620 |
| (1) | 996 423 019 04 | accelerator control | /LL 03- | 1 | M 480/481<br>M 620 |

| Pos | Part Number | Description | Remark | Qty | Model |
|---|---|---|---|---|---|
| (1) | A 996 423 020 00 | accelerator control | /RL -02 | 1 | M 480/481<br>M 620 |
| (1) | 996 423 020 02 | accelerator control | /RL | 1 | M 480/481<br>M 620 |
| (1) | 996 423 029 02 | accelerator control | /LL -02 | 1 | M 249<br>M 620 |
| (1) | 996 423 029 04 | accelerator control | /LL 03- | 1 | M 249<br>M 620 |
| (1) | 996 423 030 00 | accelerator control | /RL -02 | 1 | M 249<br>M 620 |
| (1) | 996 423 030 02 | accelerator control | /RL 03- | 1 | M 249<br>M 620 |
| - | 996 423 396 00 | circlip<br>connecting rod<br>accelerator pedal | 03- | 1 | |
| 2 | 986 423 131 04 | housing | -99 | 1 | |
| 3 | 996 423 133 00 | spring | -99 | 1 | |
| 4 | 999 591 839 40 | hexagon nut<br>T 5 | -99 | 2 | |
| 5 | 986 423 229 04 | accelerator cable | /LL -99 | 1 | M 481 |
| (5) | 986 423 228 04 | accelerator cable | /RL -99 | 1 | M 481 |
| (5) | 986 423 279 04 | accelerator cable | /LL -99 | 1 | M 249 |
| (5) | 986 423 280 04 | accelerator cable | /RL -99 | 1 | M 249 |
| | | mounting parts<br>accelerator cable | | | |
| - | 999 507 569 40 | hose holder<br>12,0/12,0 | /LL -99 | 1 | |
| - | 999 511 116 02 | clip<br>10 X 15 | /LL -99 | 1 | |
| - | 999 651 273 40 | cable holder<br>11,0 | /RL -99 | 1 | |
| - | 999 507 570 40 | hose holder<br>11,0/18,0 | /RL -99 | 1 | |
| 6 | 986 423 145 04 | deflection roller | -99 | 1 | |
| 7 | 986 423 253 03 | bolt | -99 | 1 | |
| 8 | 986 423 135 04 | lid | -99 | 1 | |
| 9 | 986 423 331 00 | grommet | -99 | 1 | |
| 10 | 996 606 115 00 | pedal sensor | 00- | 1 | |
| 11 | 996 423 389 01 | support | 00- | 1 | |
| 12 | 900 377 010 09 | hexagon nut<br>M 6 | 00- | 5 | |
| 13 | 996 423 394 00 | support | /RL 00- | 1 | |
| 14 | 900 146 157 09 | round head screw<br>M 5 X 55 | | 1 | |

| Model | Year | MG | SG | Illustration | Restrictions | UPD | 18:25 | 30.07.2008 | PET |
|---|---|---|---|---|---|---|---|---|---|
| 986 | 2004 | 8 | 01 | 801-00 | | 229 | | | |

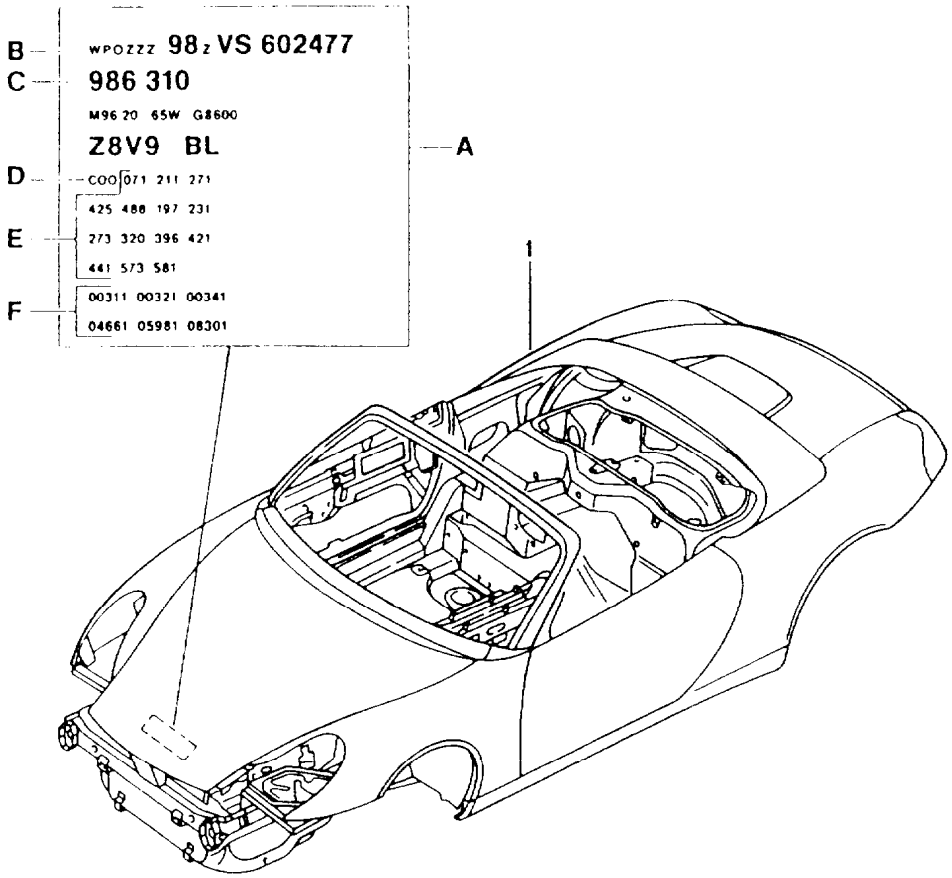


| Pos | Part Number | Description | Remark | Qty | Model |
|---|---|---|---|---|---|
| | | body in white | | | |
| | | prime coated<br>sealed<br>with<br>underbody protection<br>with<br>doors/lids/wings | | | |
| | | bodyshells can only<br>only available from current<br>model year available | | | |
| | | the data required<br>for your order<br>can be found on the<br>vehicle data carrier<br>please indicate this data<br>in your order | | | |
| A | - | vehicle data carrier | | | |
| B | - | vehicle identification no. | | | |
| C | - | order type | | | |
| D | - | country equipment | | | |
| E | - | optional extras | | | |
| F | - | additional applications | | | |
| 1 | 986 500 900 00 | body in white | | 1 | |
| | GRV | prime coated | | | |

| Model | Year | MG | SG | Illustration | Restrictions | UPD | 18:25 | 30.07.2008 | PET |
|---|---|---|---|---|---|---|---|---|---|
| 986 | 2004 | 8 | 01 | 801-05 | | 229 | | | |

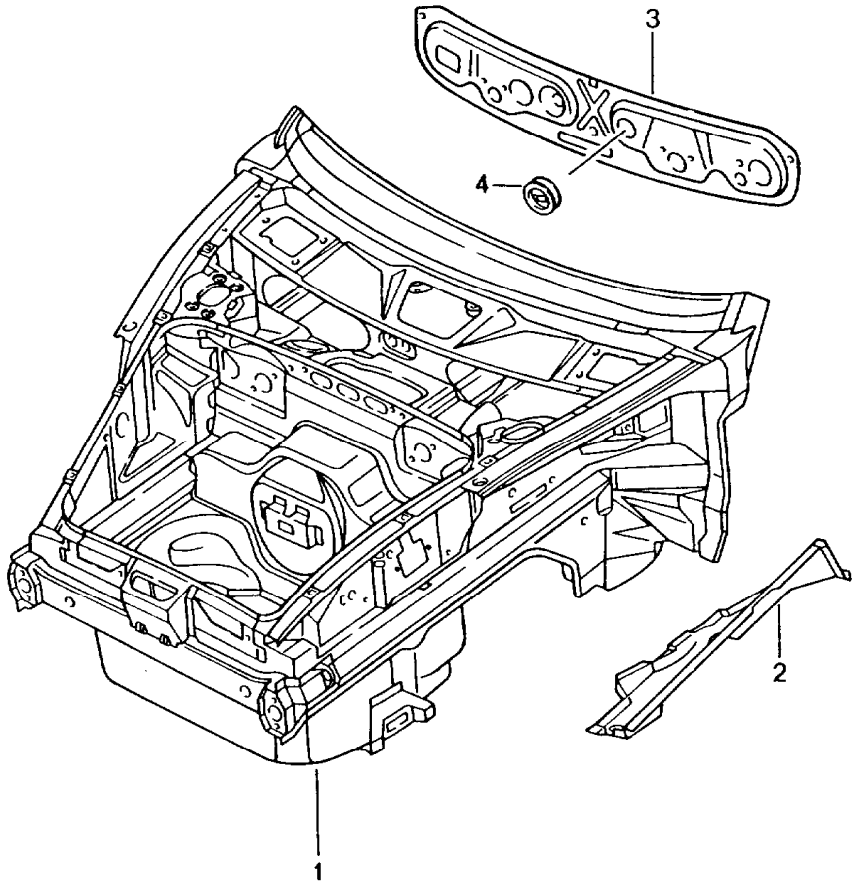


| Pos | Part Number | Description | Remark | Qty | Model |
|---|---|---|---|---|---|
| | | body front section | | | |
| 1 | 996 501 911 00 | body front section | | 1 | |
| | GRV | prime coated | | | |
| | | use also: | | | |
| 2 | 996 501 443 01 | lower part | /L | 1 | |
| | GRV | prime coated | | | |
| (2) | 996 501 444 02 | lower part | /R | 1 | |
| | GRV | prime coated | | | |
| 3 | 996 504 121 02 | lid<br>use also: | /LL | 1 | |
| -- | 000 043 300 94 | adhesive set | | 1 | |
| (3) | 996 504 121 02 | lid<br>use also: | /LL | 1 | |
| -- | 000 043 300 94 | adhesive set | | 1 | |
| (3) | 996 504 121 03 | lid | /RL | 1 | |
| (3) | 996 504 121 03 | lid | /RL | 1 | |
| 4 | 999 702 255 41 | lid<br>62,5 X 72,6 | | 1 | |

| Model | Year | MG | SG | Illustration | Restrictions | UPD | 18:25 | 30.07.2008 | PET |
|---|---|---|---|---|---|---|---|---|---|
| 986 | 2004 | 8 | 01 | 801-10 | | 229 | | | |

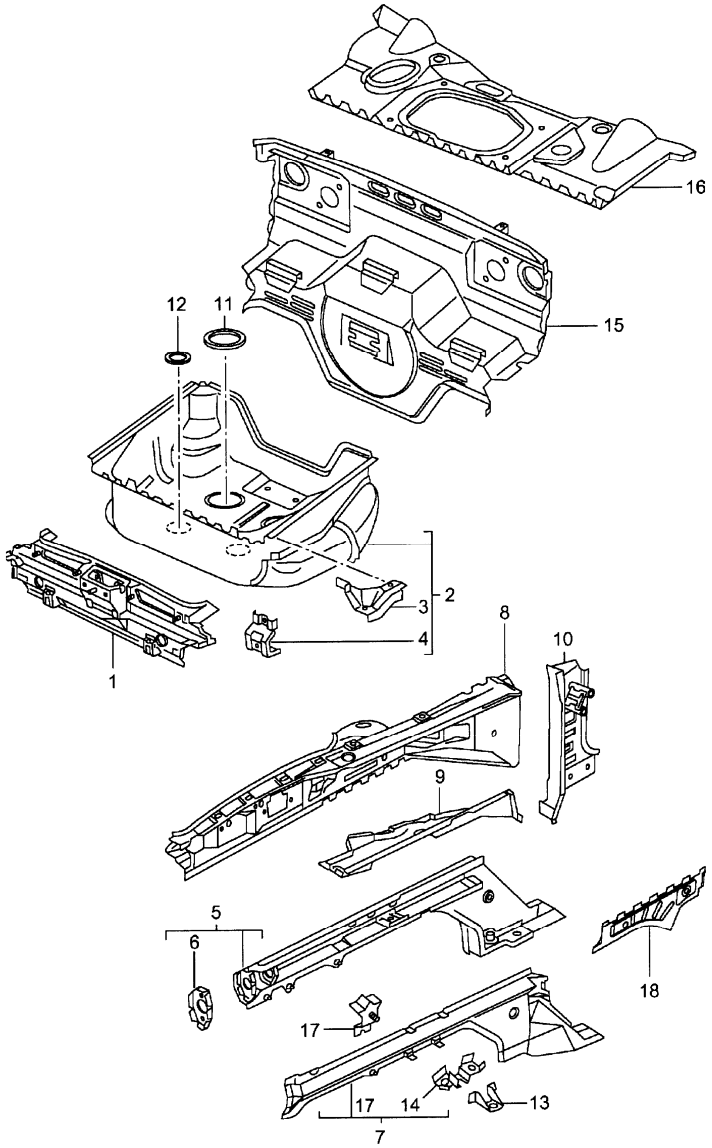


| Pos | Part Number | Description | Remark | Qty | Model |
|---|---|---|---|---|---|
| | | body front section<br>single parts | | | |
| 1 | 996 501 231 02 | terminal piece | | 1 | |
| | GRV | prime coated | | | |
| 2 | 996 501 979 00 | spare-wheel well | | 1 | |
| | GRV | prime coated | | | |
| 3 | 996 501 649 00 | corner panel | /L | 1 | |
| | GRV | prime coated | | | |
| (3) | 996 501 650 00 | corner panel | /R | 1 | |
| | GRV | prime coated | | | |
| 4 | 996 501 621 00 | support | | 3 | |
| | GRV | prime coated | | | |
| 5 | 996 501 305 04 | side member | /L -01 | 1 | |
| | GRV | prime coated | | | |
| (5) | 996 501 306 04 | side member | /R -01 | 1 | |
| | GRV | prime coated | | | |
| (5) A | 996 501 305 05 | side member | /L 02 | 1 | |
| | GRV | prime coated | | | |
| (5) | 996 501 306 05 | side member | /R 02 | 1 | |
| | GRV | prime coated | | | |
| (5) | 996 501 305 06 | side member | /L 02- | 1 | |
| | GRV | prime coated | | | |
| (5) | 996 501 306 06 | side member | /R 03- | 1 | |
| | GRV | prime coated | | | |
| 6 | 996 501 377 01 | mounting | | 2 | |
| | GRV | prime coated | | | |
| 7 | 996 501 915 00 | side member | /L | 1 | |
| | GRV | prime coated<br>F >>98WS6 07094 | | | |

| Pos | Part Number | Description | Remark | Qty | Model |
|---|---|---|---|---|---|
| | | it is necessary to rework<br>use also:<br>POS.13 | | 1 | |
| (7) | 996 501 916 00 | side member | /R | 1 | |
| | GRV | prime coated<br>F >>98WS6 07094 | | | |
| | | it is necessary to rework<br>use also:<br>POS.13 | | 1 | |
| 8 | 996 501 935 01 | wheel housing | /L | 1 | |
| | GRV | prime coated | | | |
| (8) | 996 501 936 04 | wheel housing | /R | 1 | |
| | GRV | prime coated | | | |
| 9 | 996 501 443 01 | lower part | /L | 1 | |
| | GRV | prime coated | | | |
| (9) | 996 501 444 02 | lower part | /R | 1 | |
| | GRV | prime coated | | | |
| 10 | 996 501 937 01 | hinge pillar | /L | 1 | |
| | GRV | prime coated | | | |
| (10) | 996 501 938 01 | hinge pillar | /R | 1 | |
| | GRV | prime coated | | | |
| 11 | 996 504 201 01 | lid<br>$ 145 MM | | 2 | |
| 12 | 996 504 213 01 | lid<br>$ 85 MM | | 2 | |
| 13 | 996 501 815 00 | support | | 2 | |
| | GRV | prime coated<br>F >>98WS6 07094 | | | |
| 14 | 996 501 815 02 | support | | 2 | |
| | GRV | prime coated<br>F 98WS6 07095>> | | | |
| 15 | 996 502 021 03 | bulkhead | | 1 | |
| | GRV | prime coated | | | |
| 16 | 996 502 017 01 | cross panel | -99 | 1 | |
| | GRV | prime coated | | | |
| (16) | 996 502 017 04 | cross panel | 00- | 1 | |
| | GRV | prime coated | | | |
| 17 | 996 501 341 00 | support | | 2 | |
| | GRV | prime coated | | | |
| 18 | A 996 501 665 00 | separator | /L | 1 | |
| | GRV | prime coated | | | |
| 18 | 996 501 665 01 | separator | /L | 1 | |
| | GRV | prime coated | | | |
| (18) | A 996 501 666 00 | separator | /R | 1 | |
| | GRV | prime coated | | | |
| (18) | 996 501 666 01 | separator | /R | 1 | |
| | GRV | prime coated | | | |

| Model | Year | MG | SG | Illustration | Restrictions | UPD | 18:25 | 30.07.2008 | PET |
|---|---|---|---|---|---|---|---|---|---|
| 986 | 2004 | 8 | 01 | 801-15 | | 229 | | | |

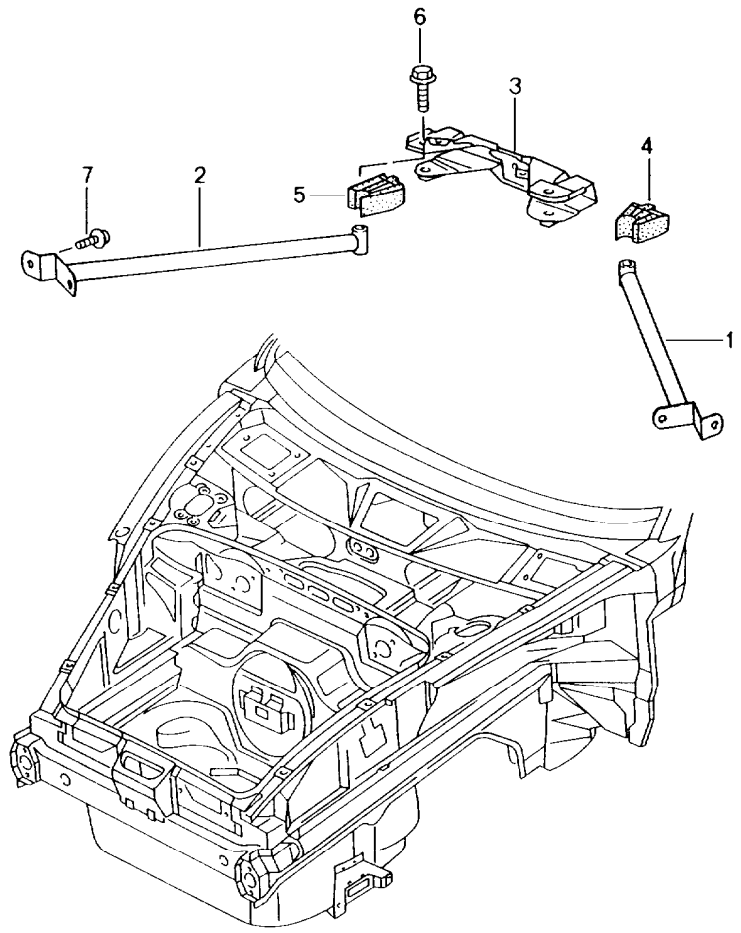


| Pos | Part Number | Description | Remark | Qty | Model |
|---|---|---|---|---|---|
| | | dome strut | | | |
| 1 | A 996 504 233 00 | dome strut | /L -02 | 1 | |
| 1 | 996 504 233 01 | dome strut | /L | 1 | |
| 2 | A 996 504 234 00 | dome strut | /R -02 | 1 | |
| 2 | 996 504 234 01 | dome strut | /R | 1 | |
| 3 | 996 504 359 00 | bracket | | 1 | |
| 4 | 996 504 633 00 | filler piece | /L | 1 | |
| 5 | 996 504 634 00 | filler piece | /R | 1 | |
| 6 | 900 378 100 09 | hexagon-head bolt<br>M 10 X 45 | | 2 | |
| 7 | 900 075 010 09 | hexagon-head bolt<br>M 6 X 12 | | 4 | |

| Model | Year | MG | SG | Illustration | Restrictions | UPD | 18:25 | 30.07.2008 | PET |
|---|---|---|---|---|---|---|---|---|---|
| 986 | 2004 | 8 | 01 | 801-20 | | 229 | | | |

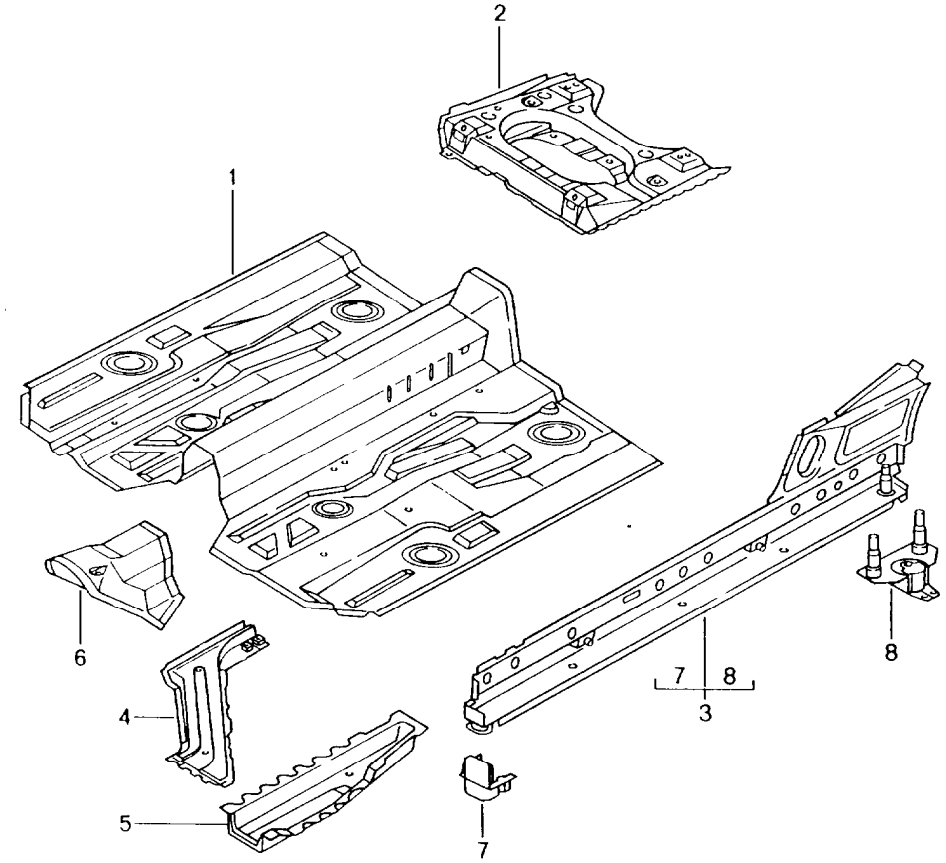


| Pos | Part Number | Description | Remark | Qty | Model |
|---|---|---|---|---|---|
| | | floor<br>centre | | | |
| 1 | 986 501 551 00 | floor | | 1 | |
| | GRV | prime coated | | | |
| 2 | 996 501 153 00 | seat support | /L | 1 | |
| | GRV | prime coated | | | |
| (2) | 996 501 154 00 | seat support | /R | 1 | |
| | GRV | prime coated | | | |
| 3 | 986 501 957 00 | side member | /L | 1 | |
| | GRV | prime coated | | | |
| (3) | 986 501 958 01 | side member | /R | 1 | |
| | GRV | prime coated | | | |
| 4 | A 996 501 507 01 | reinforcement | /L | 1 | |
| | GRV | prime coated | | | |
| 4 | 996 501 507 02 | reinforcement | /L | 1 | |
| | GRV | prime coated | | | |
| (4) | A 996 501 508 01 | reinforcement | /R | 1 | |
| | GRV | prime coated | | | |
| (4) | 996 501 508 02 | reinforcement | /R | 1 | |
| | GRV | prime coated | | | |
| 5 | 996 501 525 00 | side member | /L | 1 | |
| | GRV | prime coated | | | |
| (5) | 996 501 526 00 | side member | /R | 1 | |
| | GRV | prime coated | | | |
| 6 | 996 501 751 00 | extension | | 1 | |
| | GRV | prime coated | | | |
| 7 | 996 501 785 00 | jacking point | /L/V | 1 | |
| | GRV | prime coated | | | |
| (7) | 996 501 786 00 | jacking point | /R/V | 1 | |

| Pos | Part Number | Description | Remark | Qty | Model |
|---|---|---|---|---|---|
| | GRV | prime coated | | | |
| 8 | 996 501 481 01 | jacking point | /L/H | 1 | |
| | GRV | prime coated | | | |
| (8) | 996 501 482 01 | jacking point | /R/H | 1 | |
| | GRV | prime coated | | | |
| - | 996 504 201 01 | lid<br>$ 145 MM | | X | |
| - | 996 504 205 01 | lid<br>$ 130 MM | | X | |
| - | 996 504 207 01 | lid<br>$ 100 MM | | X | |

| Pos | Part Number | Description | Remark | Qty | Model |
|---|---|---|---|---|---|

| Model | Year | MG | SG | Illustration | Restrictions | UPD | 18:26 | 30.07.2008 | PET |
|---|---|---|---|---|---|---|---|---|---|
| 986 | 2004 | 8 | 01 | 801-35 | | 229 | | | |

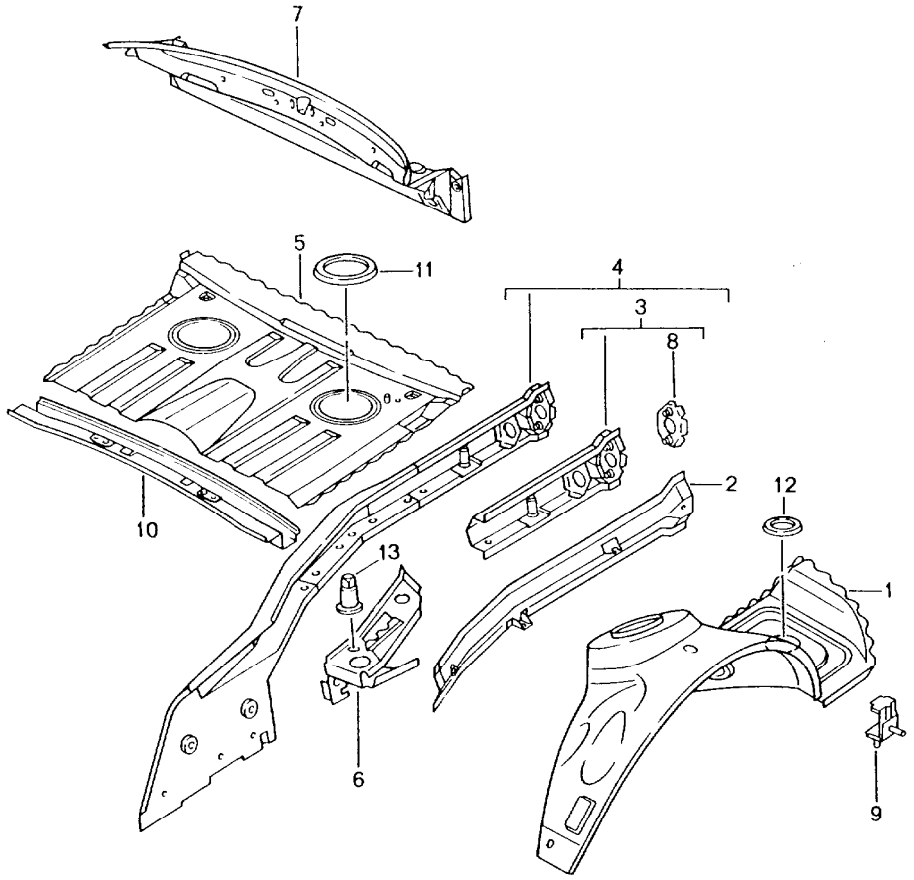


| Pos | Part Number | Description | Remark | Qty | Model |
|---|---|---|---|---|---|
| | | rear end<br>single parts | | | |
| 1 | 986 501 983 02 | wheel housing | /L | 1 | |
| | GRV | prime coated | | | |
| (1) | 986 501 984 01 | wheel housing | /R | 1 | |
| | GRV | prime coated | | | |
| 2 | A 986 501 995 00 | side member | /L | 1 | |
| | GRV | prime coated<br>outer | | | |
| 2 | 986 501 995 01 | side member | /L | 1 | |
| | GRV | prime coated<br>outer | | | |
| (2) | A 986 501 996 00 | side member | /R | 1 | |
| | GRV | prime coated<br>outer | | | |
| (2) | 986 501 996 01 | side member | /R | 1 | |
| | GRV | prime coated<br>outer | | | |
| - | 996 501 727 00 | support | | 1 | |
| | GRV | prime coated | | | |
| 3 | 986 501 977 00 | side member | /L | 1 | |
| | GRV | prime coated<br>inner<br>sub-part | | | |
| (3) | 986 501 978 00 | side member | /R | 1 | |
| | GRV | prime coated<br>inner<br>sub-part | | | |
| 4 | 986 501 177 00 | side member | /L | 1 | |
| | GRV | prime coated<br>inner | | | |
| (4) | 986 501 178 00 | side member | /R | 1 | |
| | GRV | prime coated<br>inner | | | |

| Pos | Part Number | Description | Remark | Qty | Model |
|---|---|---|---|---|---|
| 5 | 986 501 971 00 | boot floor plate | | 1 | |
| | GRV | prime coated | | | |
| - | 986 501 471 00 | floor section | | 1 | |
| | GRV | prime coated | | | |
| 6 | A 986 501 569 01 | mounting | /L | 1 | |
| | GRV | prime coated | | | |
| 6 | 987 501 569 00 | mounting | /L | 1 | |
| | GRV | prime coated | | | |
| (6) | 986 501 570 01 | mounting | /R | 1 | |
| | GRV | prime coated | | | |
| | | use also:<br>POS. 13 | | | |
| 7 | 986 501 243 00 | terminal piece | | 1 | |
| | GRV | prime coated | | | |
| 8 | A 996 501 377 00 | mounting | | 2 | |
| | GRV | prime coated | | | |
| 8 | 996 501 377 01 | mounting | | 2 | |
| | GRV | prime coated | | | |
| 9 | 986 501 613 00 | support | | 2 | |
| | GRV | prime coated | | | |
| 10 | 986 502 675 00 | cross member | | 1 | |
| | GRV | prime coated | | | |
| - | 986 501 575 00 | cross member | | 1 | |
| | GRV | prime coated<br>rear axle | | | |
| 11 | 996 504 201 01 | lid<br>$ 145 MM | | 2 | |
| 12 | 996 504 209 01 | lid<br>$ 100 MM | | 2 | |
| 13 | 999 048 004 02 | threaded bush | | 2 | |
| - | 986 502 673 01 | cross member | | 1 | |

| Pos | Part Number | Description | Remark | Qty | Model |
|---|---|---|---|---|---|
| | GRV | prime coated | | | |

| Model | Year | MG | SG | Illustration | Restrictions | UPD | 18:26 | 30.07.2008 | PET |
|---|---|---|---|---|---|---|---|---|---|
| 986 | 2004 | 8 | 01 | 801-40 | | 229 | | | |

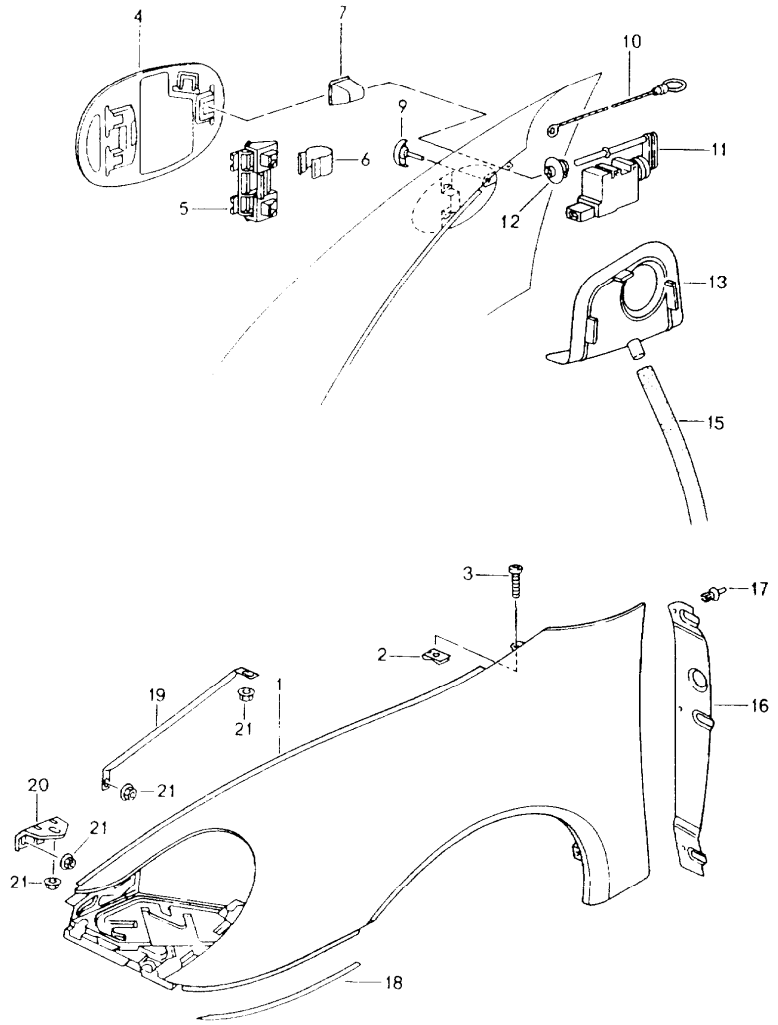


| Pos | Part Number | Description | Remark | Qty | Model |
|---|---|---|---|---|---|
| | | wing | | | |
| 1 | 996 503 031 01 | wing | /L | 1 | |
| | GRV | prime coated | | | |
| (1) | A 996 503 032 01 | wing | /R -98 | 1 | |
| | GRV | prime coated | | | |
| (1) | 996 503 032 03 | wing | /R | 1 | |
| | GRV | prime coated | | | |
| 2 | 999 507 003 02 | speed nut<br>ST 6,3 | | 22 | |
| 3 | 999 073 128 02 | tapping screw<br>ST 6,3 X 14 | | 22 | |
| 4 | A 996 504 133 00 | fuel filler flap | | 1 | |
| | GRV | prime coated | | | |
| 4 | 996 504 133 02 | fuel filler flap | | 1 | |
| | GRV | prime coated | | | |
| 5 | 996 201 063 00 | hinge | | 1 | |
| 6 | 996 201 413 01 | spring | | 1 | |
| 7 | 996 201 423 00 | cap | | 1 | |
| 9 | 996 201 513 00 | rubber stop | | 1 | |
| 10 | 996 201 493 00 | emergency operation | | 1 | |
| 11 | 996 624 113 00 | actuator | | 1 | |
| 12 | A 996 624 505 01 | guide rose | | 1 | |
| 12 | 996 624 505 02 | guide rose | | 1 | |
| 13 | 996 201 667 01 | sleeve | | 1 | |
| 15 | 996 201 153 00 | hose | | 1 | |
| 16 | 996 504 641 01 | cover | /L | 1 | |
| | 01C | black | | | |
| (16) | 996 504 642 01 | cover | /R | 1 | |
| | 01C | black | | | |

| Pos | Part Number | Description | Remark | Qty | Model |
|---|---|---|---|---|---|
| 17 | 999 591 712 40 | expansion rivet<br>A 6,0 X 12,0 | | 6 | |
| 18 | 996 504 531 00 | protective film | /L | 1 | |
| (18) | 996 504 532 00 | protective film | /R | 1 | |
| 19 | 996 504 441 00 | strut | | 2 | |
| | GRV | prime coated | | | |
| 20 | 996 504 555 00 | support | | 2 | |
| | GRV | prime coated | | | |
| 21 | 900 377 010 09 | nut<br>M 6 | | X | |
| - | 000 043 204 85 | cavity preservation<br>400 ML | | X | |

| Model | Year | MG | SG | Illustration | Restrictions | UPD | 18:26 | 30.07.2008 | PET |
|---|---|---|---|---|---|---|---|---|---|
| 986 | 2004 | 8 | 01 | 801-45 | | 229 | | | |

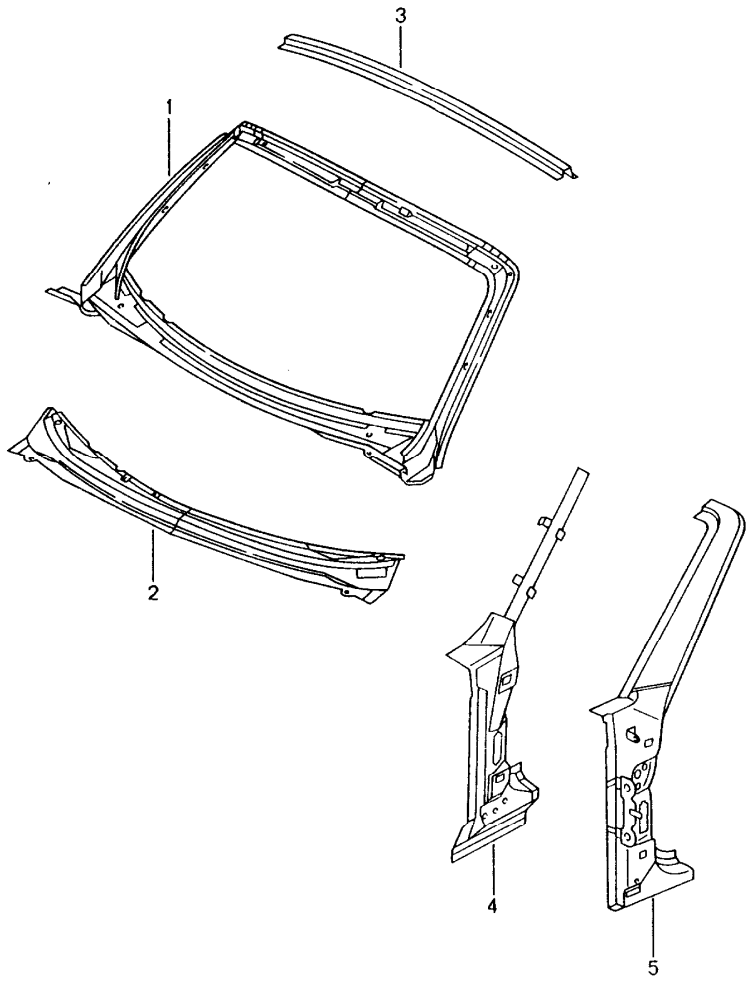


| Pos | Part Number | Description | Remark | Qty | Model |
|---|---|---|---|---|---|
| | | cowl | | | |
| 1 | A 986 502 137 00 | cowl | | 1 | |
| | GRV | prime coated inner | | | |
| 1 | 986 502 137 01 | cowl | | 1 | |
| | GRV | prime coated inner | | | |
| 2 | A 996 502 527 00 | cowl | | 1 | |
| | GRV | prime coated outer | | | |
| 2 | 996 502 527 01 | cowl | | 1 | |
| | GRV | prime coated outer | | | |
| 3 | 986 502 529 00 | cowl | | 1 | |
| | GRV | prime coated outer | | | |
| 4 | 986 502 135 00 | reinforcement | /L | 1 | |
| | GRV | prime coated inner | | | |
| (4) | 986 502 136 00 | reinforcement | /R | 1 | |
| | GRV | prime coated inner | | | |
| 5 | 986 502 335 00 | hinge pillar | /L | 1 | |
| | GRV | prime coated | | | |
| (5) | 986 502 336 00 | hinge pillar | /R | 1 | |
| | GRV | prime coated | | | |
| - | 996 502 737 00 | captive nut M 6 cowl | | 2 | |
| - | 997 502 739 00 | captive nut M6 cowl | | 1 | |

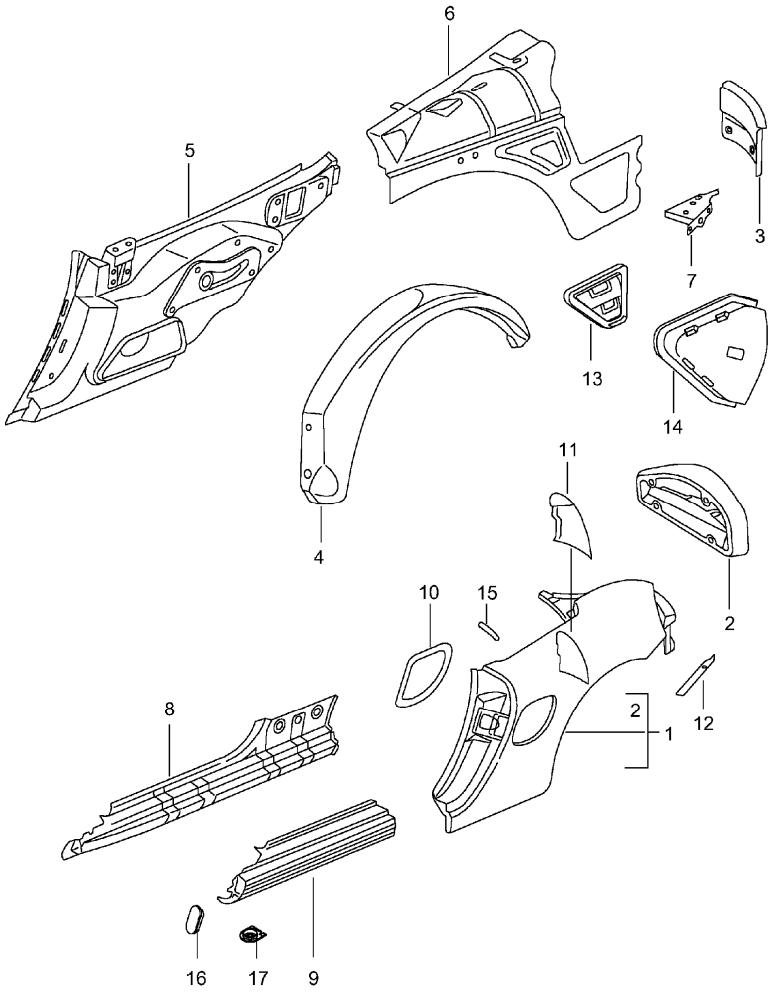


| Pos | Part Number | Description | Remark | Qty | Model |
|---|---|---|---|---|---|
| | | side section | | | |
| 1 | 986 503 961 00 | side section | /L | 1 | |
| | GRV | prime coated | | | |
| (1) | 986 503 962 00 | side section | /R | 1 | |
| | GRV | prime coated | | | |
| | | use also: | | | |
| - | 999 915 650 40 | adhesive<br>TEROMIX 6700 | | X | |
| - | 000 043 300 48 | tool<br>see technical manual<br>group 5<br>53 55 55 | | X | |
| 2 | 986 502 161 00 | frame for light | /L | 1 | |
| | GRV | prime coated | | | |
| (2) | 986 502 162 00 | frame for light | /R | 1 | |
| | GRV | prime coated | | | |
| 3 | 986 501 651 00 | corner panel | /L | 1 | |
| | GRV | prime coated | | | |
| (3) | 986 501 652 00 | corner panel | /R | 1 | |
| | GRV | prime coated | | | |
| 4 | 986 502 515 00 | wheel housing | /L -01 | 1 | |
| | GRV | prime coated | | | |
| 4 | 986 502 515 01 | wheel housing | /L 02- | 1 | |
| | GRV | prime coated | | | |
| (4) | 986 502 516 00 | wheel housing | /R | 1 | |
| | GRV | prime coated | | | |
| 5 | 986 502 083 00 | side section | /L | 1 | |
| | GRV | prime coated | | | |
| (5) | 986 502 084 00 | side section | /R | 1 | |
| | GRV | prime coated | | | |
| 6 | 986 502 085 00 | side section | /L | 1 | |

| Pos | Part Number | Description | Remark | Qty | Model |
|---|---|---|---|---|---|
| | GRV | prime coated | | | |
| (6) | 986 502 106 00 | side section | /R | 1 | |
| | GRV | prime coated | | | |
| 7 | 986 502 615 00 | closing element | /L | 1 | |
| | GRV | prime coated | | | |
| (7) | 986 502 616 00 | closing element | /R | 1 | |
| | GRV | prime coated | | | |
| 8 | A 986 502 163 00 | reinforcement | /L | 1 | |
| | GRV | prime coated | | | |
| 8 | 986 502 163 02 | reinforcement | /L | 1 | |
| | GRV | prime coated | | | |
| (8) | A 986 502 164 00 | reinforcement | /R | 1 | |
| | GRV | prime coated | | | |
| (8) | 986 502 164 01 | reinforcement | /R | 1 | |
| | GRV | prime coated | | | |
| 9 | 986 503 963 00 | door sill | /L | 1 | |
| | GRV | prime coated | | | |
| (9) | 986 503 964 00 | door sill | /R | 1 | |
| | GRV | prime coated | | | |
| 10 | 986 504 907 00 | gasket<br>air inlet | | 2 | |
| 11 | 986 504 967 01 | gasket | /L | 1 | |
| (11) | 986 504 968 01 | gasket<br>side section<br>wheel housing<br>see workshop manual | /R | 1 | |
| 12 | 986 504 635 00 | protective film | /L | 1 | |
| (12) | 986 504 636 00 | protective film | /R | 1 | |
| 13 | 986 572 043 02 | bleeding | /L | 1 | |
| (13) | 986 572 044 00 | bleeding | /R | 1 | |
| 14 | 986 572 643 00 | air box | /L | 1 | |
| (14) | 986 572 644 00 | air box | /R | 1 | |
| 15 | 996 537 237 00 | protective film | | 2 | |
| 16 | 986 572 723 00 | stopper<br>door sill | | 2 | |
| 17 | 999 703 475 40 | water drain sleeve<br>door sill | | 2 | |

| Model | Year | MG | SG | Illustration | Restrictions | UPD | 18:26 | 30.07.2008 | PET |
|---|---|---|---|---|---|---|---|---|---|
| 986 | 2004 | 8 | 01 | 801-70 | | 229 | | | |

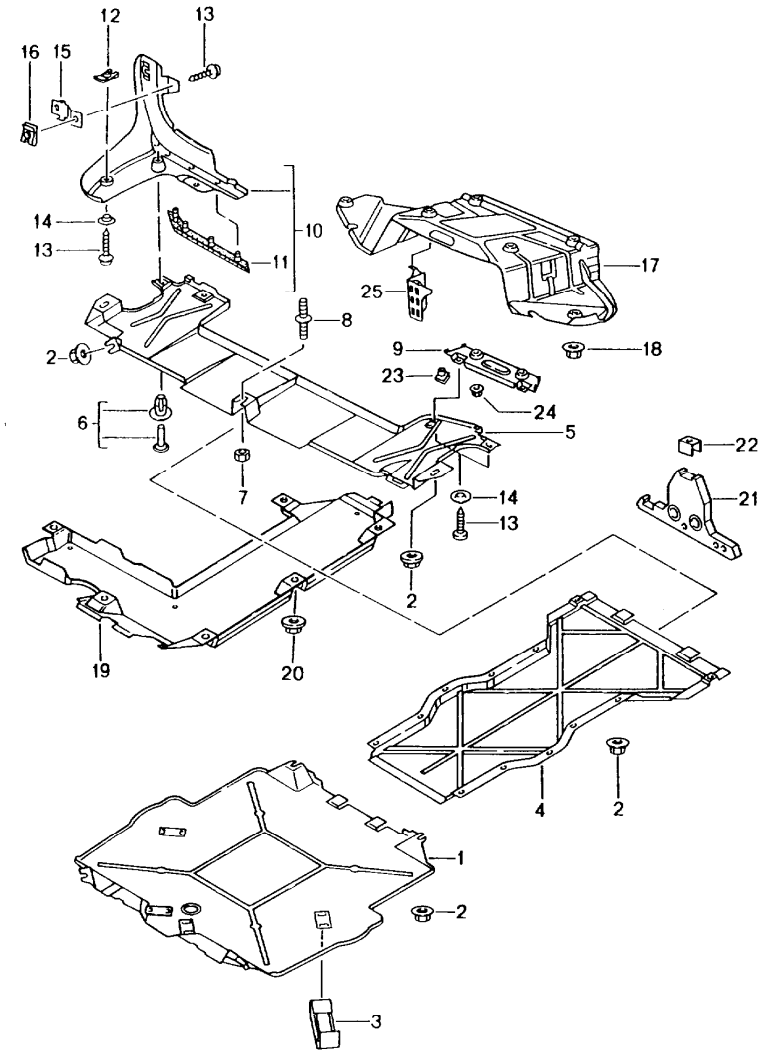


| Pos | Part Number | Description | Remark | Qty | Model |
|---|---|---|---|---|---|
| | | linings<br>for<br>underbody | | | |
| 1 | 996 504 527 02 | cover<br>front | | 1 | |
| 2 | 999 049 022 40 | plastic nut<br>T 5 | | 21 | |
| 3 | 999 507 657 09 | clamp<br>centre | | 6 | |
| 4 | 996 504 043 02 | cover<br>centre | | 1 | |
| 5 | 986 504 119 00 | cover<br>rear | | 1 | |
| 6 | 999 507 497 40 | expansion rivet<br>8,0 X 14,0 | | X | |
| 7 | 999 076 068 09 | hexagon nut<br>M 6 | | 1 | |
| 8 | 999 919 169 02 | stud<br>M 6 X 11 | | 1 | |
| (9) A | 986 504 571 00 | support | 97 | 2 | |
| 9 | 986 504 571 01 | support | | 2 | |
| 10 | 986 504 393 00 | cover | /L | 1 | |
| | 01C | satin black | | | |
| (10) | 986 504 394 00 | cover | /R | 1 | |
| | 01C | satin black | | | |
| 11 | 986 504 893 00 | rubber lip | /L | 1 | |
| (11) | 986 504 894 00 | rubber lip | /R | 1 | |
| 12 | 999 507 348 02 | speed nut<br>ST 4,8 | | 4 | |
| 13 | 999 073 061 02 | tapping screw<br>ST 4,8 X 16 | | X | |
| 14 | 944 503 255 00 | spacer sleeve | | X | |
| 15 | 986 504 593 00 | support | | 2 | |
| 16 | 999 507 462 02 | speed nut<br>ST 4,8 | | 4 | |

| Pos | Part Number | Description | Remark | Qty | Model |
|---|---|---|---|---|---|
| 17 | 986 504 605 02 | heat protection | | 1 | |
| 18 | A 999 049 017 09 | collar nut | | 7 | |
| 18 | 999 049 025 09 | hexagon nut | | 7 | |
| 19 | 996 504 561 00 | cover | | 1 | |
| 20 | 999 049 022 40 | plastic nut<br>T5 | | 6 | |
| 21 | 986 504 643 01 | seal | -03 | 1 | |
| 22 | 986 504 743 00 | support | -03 | 1 | |
| 23 | 999 591 699 02 | speed nut<br>St 4,8 | | 4 | |
| 24 | 999 084 212 02 | hexagon nut<br>M 6 | | 2 | |
| 25 | 986 504 651 00 | heat protection | 00- | 1 | M 008 |

| Pos | Part Number | Description | Remark | Qty | Model |
|---|---|---|---|---|---|

| Model | Year | MG | SG | Illustration | Restrictions | UPD | 18:27 | 30.07.2008 | PET |
|---|---|---|---|---|---|---|---|---|---|
| 986 | 2004 | 8 | 01 | 801-75 | | 229 | | | |

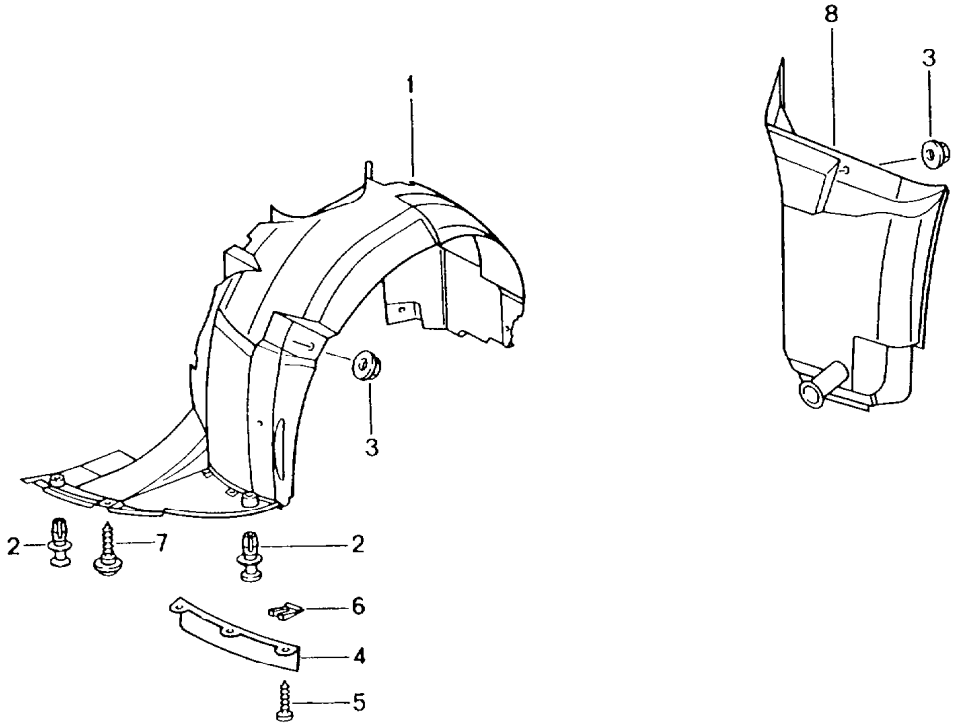





| Pos | Part Number | Description | Remark | Qty | Model |
|---|---|---|---|---|---|
| | | linings<br>for<br>wheel housing | | | |
| 1 | 996 504 203 06 | wheel-housing liner | /L | 1 | |
| (1) | 996 504 204 06 | wheel-housing liner | /R | 1 | |
| 2 | 999 507 497 40 | expansion rivet<br>8,0 X 14,0 | | 13 | |
| 3 | 999 049 022 40 | plastic nut<br>T5 | | 10 | |
| 4 | 996 504 503 00 | rubber lip | /L | 1 | |
| (4) | 996 504 504 00 | rubber lip | /R | 1 | |
| 5 | 999 073 061 02 | tapping screw<br>ST 4,8 X 16 | | 6 | |
| 6 | 999 591 699 02 | speed nut<br>St 4,8 | | 12 | |
| 7 | A 999 073 198 09 | tapping screw | | 4 | |
| 7 | 999 073 227 09 | shouldered bolt<br>ST 4,8 X 19 | | 4 | |
| 8 | A 986 504 573 00 | wheel-housing liner | /L | 1 | |
| 8 | 986 504 573 01 | wheel-housing liner | /L | 1 | |
| (8) | A 986 504 574 00 | wheel-housing liner | /R | 1 | |
| (8) | 986 504 574 01 | wheel-housing liner | /R | 1 | |
| - | 996 504 603 00 | air duct | /L | 1 | M 008 |
| - | 996 504 604 00 | air duct | /R | 1 | M 008 |

| Model | Year | MG | SG | Illustration | Restrictions | UPD | 18:27 | 30.07.2008 | PORSCHE PET PORSCHE |
|---|---|---|---|---|---|---|---|---|---|
| 986 | 2004 | 8 | 01 | 801-80 | | 229 | | | |

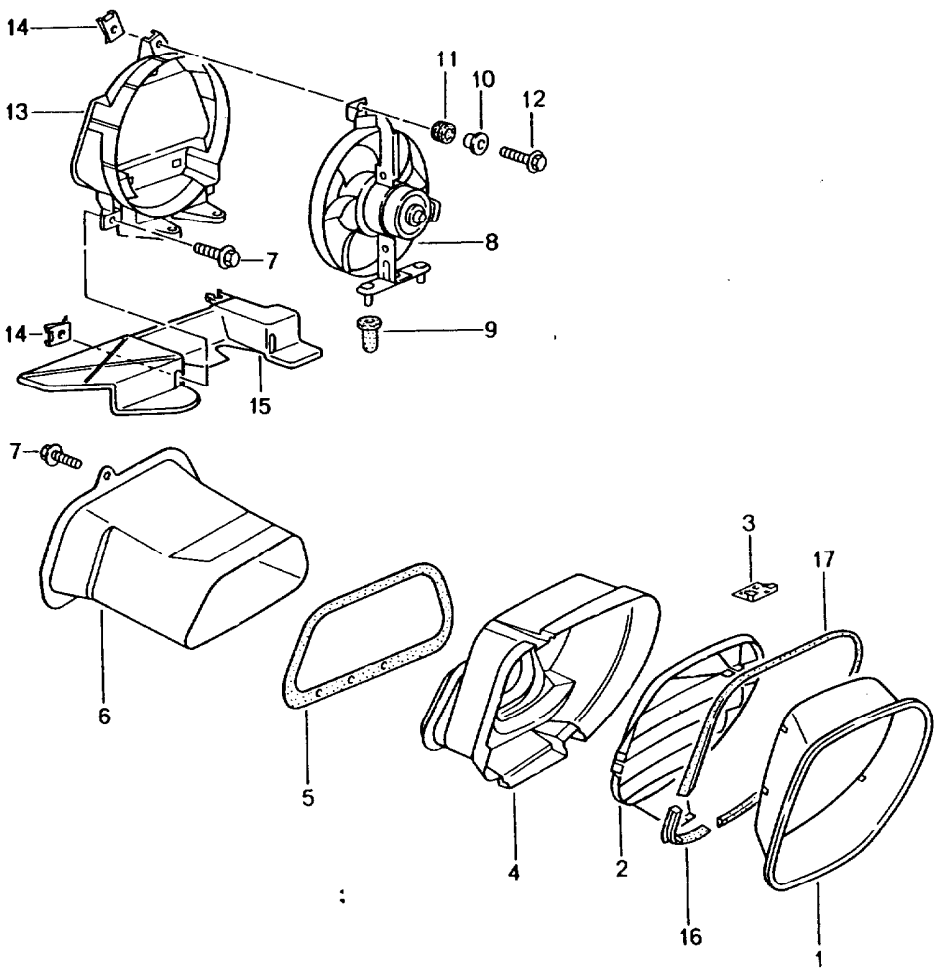


| Pos | Part Number | Description | Remark | Qty | Model |
|---|---|---|---|---|---|
| | | ventilation<br>engine compartment | | | |
| 1 | 986 504 561 01 | air duct | /L -99 | 1 | |
| | G2X | prime coated | | | |
| 1 | 986 504 561 02 | air duct | /L -02 | 1 | |
| | G2X | prime coated | | | |
| 1 | 986 504 561 03 | air duct | /L 03- | 1 | |
| | G2X | prime coated | | | |
| (1) | 986 504 562 01 | air duct | /R -02 | 1 | |
| | G2X | prime coated | | | |
| (1) | 986 504 562 03 | air duct | /R 03- | 1 | |
| | G2X | prime coated | | | |
| 2 | 986 504 747 00 | ventilation grille | /L | 1 | |
| (2) | 986 504 748 00 | ventilation grille | /R | 1 | |
| 3 | 986 504 847 00 | spring clamp | | 6 | |
| 4 A | 986 575 657 00 | air duct | /L -02 | 1 | |
| 4 | 986 575 657 01 | air duct | /L | 1 | |
| (4) | 986 575 658 00 | air duct | /R -02 | 1 | |
| (4) | 986 575 658 01 | air duct | /R 03- | 1 | |
| - | 986 575 761 00 | grille | | 1 | |
| 5 | 986 575 655 00 | gasket | | 1 | |
| 6 | 986 575 559 01 | air duct | | 1 | |
| 7 | 900 075 413 09 | combination screw<br>M 6 X 16 | | 6 | |
| 8 | 986 624 036 00 | fan | | 1 | |
| - | 999 650 252 40 | plug socket | | 1 | |
| - | 999 650 253 22 | connector | | 2 | |
| - | 999 650 254 40 | locking device | | 1 | |
| - | 999 650 255 40 | gasket | | 2 | |
| 9 | 999 703 452 40 | rubber buffer | | 2 | |

| Pos | Part Number | Description | Remark | Qty | Model |
|---|---|---|---|---|---|
| 10 | 999 209 049 02 | spacer sleeve | | 1 | |
| 11 | 999 703 451 40 | grommet | | 1 | |
| 12 | 900 378 030 09 | hexagon-head bolt<br>M 6 X 20 | | 1 | |
| 13 | 986 575 356 00 | airscoop | | 1 | |
| 14 | 999 507 550 02 | speed nut<br>M 6 | | 3 | |
| 15 | 986 575 756 01 | air duct | | 1 | |
| 16 | 986 504 563 01 | centring wedge | /L 00- | 1 | |
| 17 | 986 504 565 01 | gasket | /L 00- | 1 | |
| - | 986 504 749 01 | frame | /L 03- | 1 | |
| - | 986 504 750 00 | frame | /R 03- | 1 | |
| - | 986 504 731 00 | water tube | 03- | 1 | |
| - | 986 504 831 00 | support<br>water tube | | 1 | |

| Pos | Part Number | Description | Remark | Qty | Model |
|---|---|---|---|---|---|

| Model | Year | MG | SG | Illustration | Restrictions | UPD | 18:27 | 30.07.2008 | PET |
|---|---|---|---|---|---|---|---|---|---|
| 986 | 2004 | 8 | 02 | 802-00 | | 229 | | | |

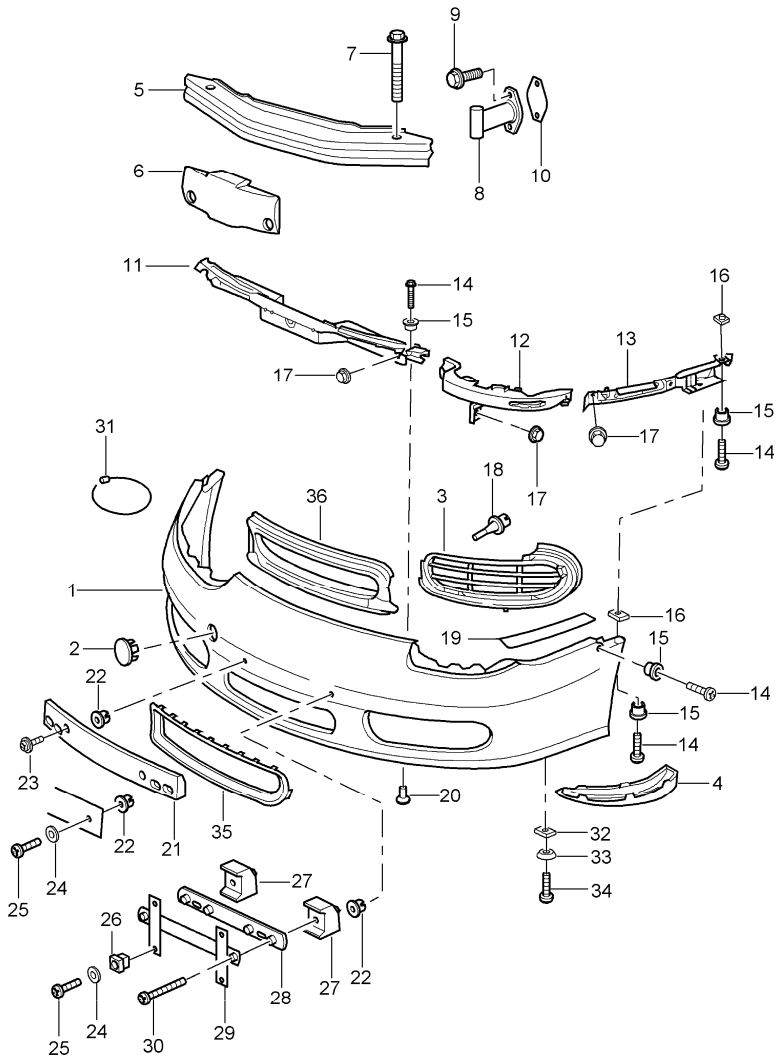


| Pos | Part Number | Description | Remark | Qty | Model |
|---|---|---|---|---|---|
| | | bumper<br>front | | | |
| 1 | 986 505 311 03 | lining | | 1 | M 009 |
| | G2X | prime coated | | | |
| (1) | 986 505 311 04 | lining | 00- | 1 | M 008 |
| | G2X | prime coated | | | |
| (1) | 986 505 311 05 | lining | 03- | 1 | M 009 |
| | G2X | prime coated | | | |
| (1) | 986 505 311 06 | lining | 03- | 1 | M 008 |
| | G2X | prime coated | | | |
| 2 | 964 505 103 00 | cap | -02 | 1 | |
| | G2X | prime coated | | | |
| (2) | 986 505 511 00 | cap | 03- | 1 | |
| | G2X | prime coated | | | |
| 3 | 986 505 553 01 | grille frame | /L -02 | 1 | M 009 |
| | 01C | satin black | | | |
| 3 | 986 505 553 03 | grille frame | /L 03- | 1 | |
| | 01C | satin black | | | |
| (3) | 986 505 554 01 | grille frame | /R -02 | 1 | M 009 |
| | 01C | satin black | | | |
| (3) | 986 505 554 03 | grille frame | /R 03- | 1 | |
| | 01C | satin black | | | |
| - | 986 505 531 00 | disc<br>upper | /L 03- | 1 | |
| | G2X | prime coated | | | |
| - | 986 505 532 00 | disc<br>upper | /R 03- | 1 | |
| | G2X | prime coated | | | |
| - | 986 505 533 00 | disc<br>lower | /L 03- | 1 | |
| | G2X | prime coated | | | |

| Pos | Part Number | Description | Remark | Qty | Model |
|---|---|---|---|---|---|
| - | 986 505 534 00 | disc<br>lower | /R 03- | 1 | |
| | G2X | prime coated | | | |
| - | 999 507 708 09 | clamping washer | | 4 | |
| (3) | 986 505 553 02 | grille frame | /L -02 | 1 | M 008 |
| | 9A4 | titanium metallic | | | |
| (3) | 986 505 554 02 | grille frame | /R -02 | 1 | M 008 |
| | 9A4 | titanium metallic | | | |
| 4 | 996 505 525 00 | cover | /L | 1 | |
| | 01C | satin black | | | |
| (4) | 996 505 526 00 | cover | /R | 1 | |
| | 01C | satin black | | | |
| 5 | 996 505 011 00 | bumper reinforcement | | 1 | |
| (6) | 986 505 777 01 | foam part | | 1 | |
| 7 | 900 378 088 09 | hexagon-head bolt<br>M 12 X 100 | | 2 | |
| 8 | 996 505 019 01 | impact pipe | | 2 | |
| (8) | 996 505 015 00 | impact absorber | | 2 | M 058 |
| 9 | 900 075 457 02 | combination screw<br>M 8 X 30 | | 4 | |
| 10 | A 964 505 775 00 | desk pad | | 2 | |
| 10 | 996 505 775 00 | desk pad | | 2 | |
| 11 | A 996 505 531 00 | retaining strip | | 1 | |
| 11 | 996 505 531 01 | retaining strip<br>centre | | 1 | |
| 12 | 996 505 539 00 | bracket | /L | 1 | |
| (12) | 996 505 540 00 | bracket | /R | 1 | |
| 13 | 996 505 535 00 | retaining strip | /L | 1 | |
| (13) | 996 505 536 00 | retaining strip | /R | 1 | |
| 14 | 900 144 101 02 | tapping screw<br>B 4,8 X 19 | | X | |
| 15 | 999 209 045 09 | spacer | | X | |
| 16 | 999 507 072 02 | speed nut<br>B 4,8 | | X | |
| 17 | 999 084 633 09 | hexagon nut<br>M 6 | | X | |
| 18 | 996 641 142 00 | temperature sensor | | 1 | |
| - | 999 652 911 40 | plug socket | | 1 | |
| - | 999 652 934 22 | connector | | 2 | |
| - | 999 650 127 40 | gasket | | 2 | |
| 19 | A 999 911 606 40 | adhesive tape | | X | |
| 19 | 000 043 204 83 | adhesive tape<br>roller<br>16,5 METER | | X | |
| 20 | 999 507 497 40 | expansion rivet<br>8 X 14 | | 2 | |
| 21 | 986 701 105 00 | support | -02 | 1 | (BRD)(F)(E)<br>(GB) |
| 21 | 986 701 105 01 | support | 03- | 1 | (BRD)(F)(E)<br>(GB) |
| 22 | 999 507 040 40 | expander nut<br>4,2 | | X | |
| 23 | 900 143 151 02 | combination screw<br>4,2 X 16 | | 2 | |
| 24 | 900 025 024 40 | washer | | X | |
| 25 | 900 143 134 00 | tapping screw<br>B 4,2 X 9,5 | | X | |
| 27 | 996 701 801 00 | spacer | /L -02 | 1 | |
| (27) | 996 701 802 00 | spacer | /R -02 | 1 | |
| (27) | 986 701 801 00 | spacer | /L 03- | 1 | |
| (27) | 986 701 802 00 | spacer | /R 03- | 1 | |
| 28 | 911 701 121 03 | support | | 1 | |
| 30 | 900 145 012 07 | counters. head tapp. screw<br>B 4,2 X 32 | | 2 | |
| 31 | 999 651 225 40 | safety rope | | 1 | |

| Pos | Part Number | Description | Remark | Qty | Model |
|---|---|---|---|---|---|
| 32 | 999 591 699 02 | speed nut<br>St 4,8 | | 4 | |
| 34 | A 999 073 198 09 | tapping screw | | 4 | |
| 34 | 999 073 227 09 | shouldered bolt<br>ST 4,8 X 19 | | 4 | |
| 35 | 986 505 551 00 | cover | -02 | 1 | M 008 |
| | G2X | prime coated | | | |
| 35 | 986 505 551 01 | cover | 03- | 1 | M 008 |
| | G2X | prime coated | | | |
| 36 | 986 505 555 00 | retaining frame | -02 | 1 | M 008 |
| | 01C | satin black | | | |
| 36 | 986 505 555 02 | retaining frame | 03- | 1 | M 008 |
| | 01C | satin black | | | |
| - | 999 507 707 00 | u-clamp | | 19 | M 008 |

| Pos | Part Number | Description | Remark | Qty | Model |
|---|---|---|---|---|---|

| Model | Year | MG | SG | Illustration | Restrictions | UPD | 18:27 | 30.07.2008 | PET |
|---|---|---|---|---|---|---|---|---|---|
| 986 | 2004 | 8 | 02 | 802-05 | | 229 | | | |

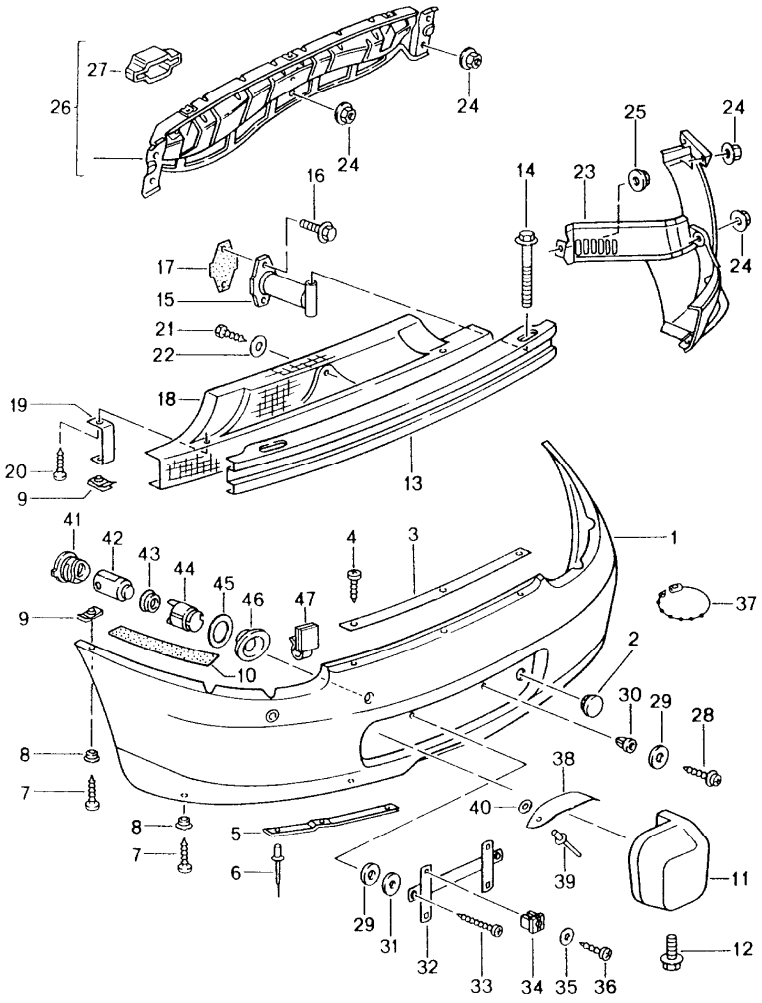


| Pos | Part Number | Description | Remark | Qty | Model |
|---|---|---|---|---|---|
| | | bumper<br>rear | | | |
| 1 | 986 505 411 00 | lining | -02 | 1 | |
| | G2X | prime coated<br>it is necessary to rework | | | M 635 |
| (1) | 986 505 411 08 | lining | 03- | 1 | |
| | G2X | prime coated | | | |
| (1) | A 986 505 411 10 | lining | 03- | 1 | M 635 |
| | G2X | prime coated | | | |
| 2 | 964 505 103 00 | cap | | 1 | |
| | G2X | prime coated | | | |
| 3 | 986 505 833 00 | retaining strip | -02 | 1 | |
| (3) | 986 505 833 01 | retaining strip | 03- | 1 | |
| 4 | 900 144 101 02 | tapping screw<br>B 4,8 X 19 | | 3 | |
| 5 | 986 505 837 00 | retaining strip | /L | 1 | |
| (5) | 986 505 838 00 | retaining strip | /R | 1 | |
| - | 986 505 647 00 | retaining frame | /L 03- | 1 | |
| - | 986 505 648 00 | retaining frame | /R 03- | 1 | |
| - | 986 505 647 01 | retaining frame | /L 04 | 1 | M 091 |
| | M7Z | gt silver metallic | | | |
| - | 986 505 648 01 | retaining frame | /R 04 | 1 | M 091 |
| | M7Z | gt silver metallic | | | |
| 6 | 999 190 104 30 | blind rivet<br>3,2 X 7,9 | | 4 | |
| 7 | A 999 073 198 09 | tapping screw | | 8 | |
| 7 | 999 073 227 09 | shouldered bolt<br>ST 4,8 X 19 | | 8 | |
| 9 | 999 507 072 02 | speed nut<br>4,8 | | 4 | |
| 10 | A 999 911 606 40 | adhesive tape | | X | |

| Pos | Part Number | Description | Remark | Qty | Model |
|---|---|---|---|---|---|
| 10 | 000 043 204 83 | adhesive tape<br>roller<br>16,5 METER | | X | |
| 11 | 986 505 425 00 | buffer | /L | 1 | M 215 |
| | 70C | rally black | | | |
| (11) | 986 505 426 00 | buffer | /R | 1 | M 215 |
| | 70C | rally black | | | |
| (11) | 986 505 425 01 | buffer | /L | 1 | M 91/M 215 |
| | M7Z | gt silver metallic | | | |
| (11) | 986 505 426 01 | buffer | /R | 1 | M 91/M 215 |
| | M7Z | gt silver metallic | | | |
| 13 | 986 505 021 00 | bumper reinforcement | | 1 | |
| 14 | 900 378 088 09 | hexagon-head bolt<br>M 12 X 100 | | 2 | |
| 15 | 996 505 019 01 | impact pipe | | 2 | |
| (15) | 996 505 015 00 | impact absorber | | 2 | M 058 |
| 16 | 900 075 457 02 | hexagon-head bolt<br>M 8 X 30 | | 4 | |
| 17 | 993 505 775 00 | seal | | 2 | |
| 18 | 986 505 475 00 | heat protection | -02 | 1 | |
| 18 | 986 505 475 01 | heat protection | 03- | 1 | |
| 19 | 986 505 639 00 | rear support | -02 | 2 | |
| (19) | 986 505 639 01 | rear support | 03- | 2 | |
| 20 | 999 075 048 02 | combination screw<br>M 6 X 22 | | 2 | |
| 21 | 900 278 025 02 | hexagon-head bolt<br>M 5 X 12 | | 1 | |
| 22 | 999 025 243 02 | spacer | | 1 | |
| (23) | 986 505 631 01 | wheel-housing liner | /L -02 | 1 | |
| (23) | 986 505 631 02 | wheel-housing liner | /L 03- | 1 | |
| 23 | 986 505 632 01 | wheel-housing liner | /R -02 | 1 | |
| (23) | 986 505 632 02 | wheel-housing liner | /R 03- | 1 | |
| 24 | 999 084 633 09 | hexagon nut<br>M 6 | | 11 | |
| 25 | 999 049 022 40 | plastic nut<br>T 5 | | 2 | |
| 26 | 986 505 641 00 | retaining strip | -02 | 1 | |
| (26) | 986 505 641 01 | retaining strip | 03- | 1 | |
| 27 | 986 505 851 00 | spacer | | 2 | |
| 28 | 900 143 151 02 | combination screw<br>B 4,2 X 16 | | 2 | |
| 29 | 999 025 235 40 | rubber washer | | X | |
| 30 | 999 507 040 40 | expander nut<br>4,2 | | 2 | |
| 37 | 999 651 225 40 | safety rope | | 1 | |
| 38 | 986 505 811 01 | heat protection | -02 | 1 | |
| (38) | 986 505 811 02 | heat protection | 03- | 1 | |
| 39 | 999 190 463 30 | blind rivet<br>A 4,0 X 13,0 | | 2 | |
| 40 | 900 151 028 02 | washer<br>4,3 | | 2 | |
| 41 | 996 505 669 00 | retainer spring<br>outer | -02 | 2 | M 635 |
| (41) | 986 505 869 00 | retainer spring<br>outer | 03- | 2 | M 635 |
| (41) | 986 505 667 00 | retainer spring<br>inner | -02 | 2 | M 635 |
| (41) | 986 505 867 01 | retainer spring<br>inner | 03- | 2 | M 635 |
| 42 | 996 606 171 00 | sensor | -02 | 4 | M 635 |
| | 9A4 | titanium metallic | | | |
| (42) | 000 043 204 56 | sensor | 03- | 4 | M 635 |
| 43 | 996 606 471 00 | ring | | 4 | M 635 |
| 44 | 996 505 865 00 | housing | -02 | 4 | M 635 |
| (44) | 986 505 865 00 | housing | 03- | 4 | M 635 |

| Pos | Part Number | Description | Remark | Qty | Model |
|---|---|---|---|---|---|
| 45 | 999 025 262 02 | washer<br>35 X 50 X 0,5 | | 4 | M 635 |
| 46 | 986 505 859 00 | cover | /L -02 | 1 | M 635 |
| | G2X | prime coated<br>inner | | | |
| (46) | 986 505 859 01 | cover | /L 03- | 1 | M 635 |
| | G2X | prime coated<br>inner | | | |
| (46) | 986 505 860 00 | cover | /R -02 | 1 | M 635 |
| | G2X | prime coated<br>inner | | | |
| (46) | 986 505 860 01 | cover | /R 03- | 1 | M 635 |
| | G2X | prime coated<br>inner | | | |
| (46) | 986 505 861 00 | cover | /L -02 | 1 | M 635 |
| | G2X | prime coated<br>outer | | | |
| (46) | 986 505 861 01 | cover | /L 03- | 1 | M 635 |
| | G2X | prime coated<br>outer | | | |
| (46) | 986 505 862 00 | cover | /R -02 | 1 | M 635 |
| | G2X | prime coated<br>outer | | | |
| (46) | 986 505 862 01 | cover | /R 03- | 1 | M 635 |
| | G2X | prime coated<br>outer | | | |
| 47 | 999 507 623 40 | cable holder | | 4 | M 635 |

| Pos | Part Number | Description | Remark | Qty | Model |
|---|---|---|---|---|---|

| Model | Year | MG | SG | Illustration | Restrictions | UPD | 18:28 | 30.07.2008 | PET |
|---|---|---|---|---|---|---|---|---|---|
| 986 | 2004 | 8 | 03 | 803-00 | | 229 | | | |

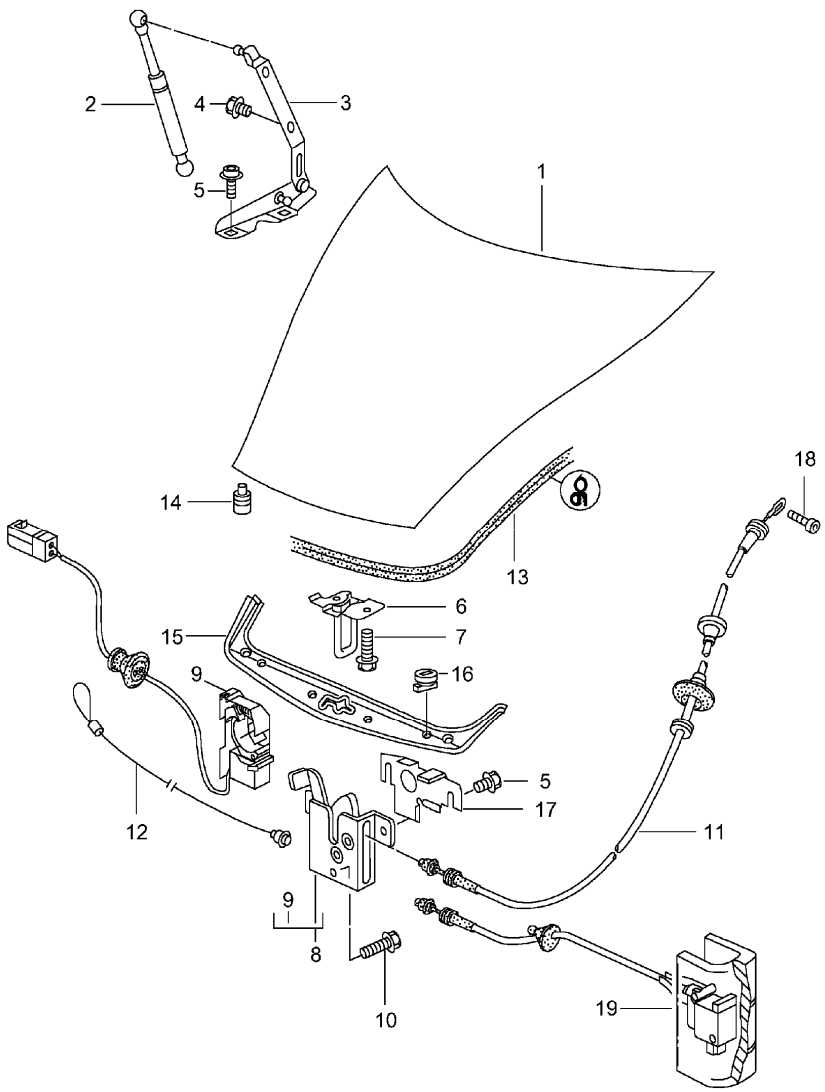


| Pos | Part Number | Description | Remark | Qty | Model |
|---|---|---|---|---|---|
| | | lid<br>front | | | |
| 1 | 996 511 011 02 | lid | | 1 | |
| | GRV | prime coated<br>use also: | | | |
| - | 000 043 204 38 | sealing material | | 1 | |
| 2 | 996 511 551 01 | gas-pressure spring | | 2 | |
| 3 | 996 511 151 01 | hinge | /L | 1 | |
| (3) | 996 511 152 01 | hinge | /R | 1 | |
| 4 | 900 378 036 09 | hexagon-head bolt<br>M 6 X 12 | | 4 | |
| 5 | 900 075 466 09 | combination screw<br>M 6 X 16 | | 6 | |
| 6 | 996 511 051 02 | lock upper part | | 1 | |
| 7 | 900 378 173 09 | hexagon-head bolt<br>M 6 X 20 | | 2 | |
| 8 A | 996 511 053 01 | lock lower part | -01 | 1 | |
| 8 | 996 511 053 02 | lock lower part | | 1 | |
| - | 999 652 750 40 | plug socket | | 1 | |
| - | 999 652 567 22 | connector | | 2 | |
| 9 | 996 613 206 00 | microswitch | | 1 | |
| 10 | 900 075 347 02 | screw<br>M 6 X 30 | | 1 | |
| 11 | 996 511 017 01 | traction | /LL -00 | 1 | |
| (11) | 996 511 017 02 | traction | 01- | 1 | |
| (11) | 996 511 018 00 | traction | /RL -00 | 1 | |
| 12 | 996 511 521 00 | emergency operation | | 1 | |
| 13 | 996 511 611 00 | gasket | | 1 | |
| 14 | 999 703 140 40 | buffer | | 2 | |
| 15 | 996 504 811 00 | trim cover | | 1 | |
| | 01C | satin black | | | |
| 16 | 999 590 036 40 | catch | | 4 | |

| Pos | Part Number | Description | Remark | Qty | Model |
|---|---|---|---|---|---|
| | 01C | satin black | | | |
| 17 | 996 511 653 00 | cover | | 1 | |
| 18 | 900 119 121 09 | pan-head screw<br>M 4 X 14 | | 1 | |
| 19 | 996 511 127 00 | actuator | 01- | 1 | |

| Pos | Part Number | Description | Remark | Qty | Model |
|---|---|---|---|---|---|

| Model | Year | MG | SG | Illustration | Restrictions | UPD | 18:28 | 30.07.2008 | PET |
|---|---|---|---|---|---|---|---|---|---|
| 986 | 2004 | 8 | 03 | 803-05 | | 229 | | | |

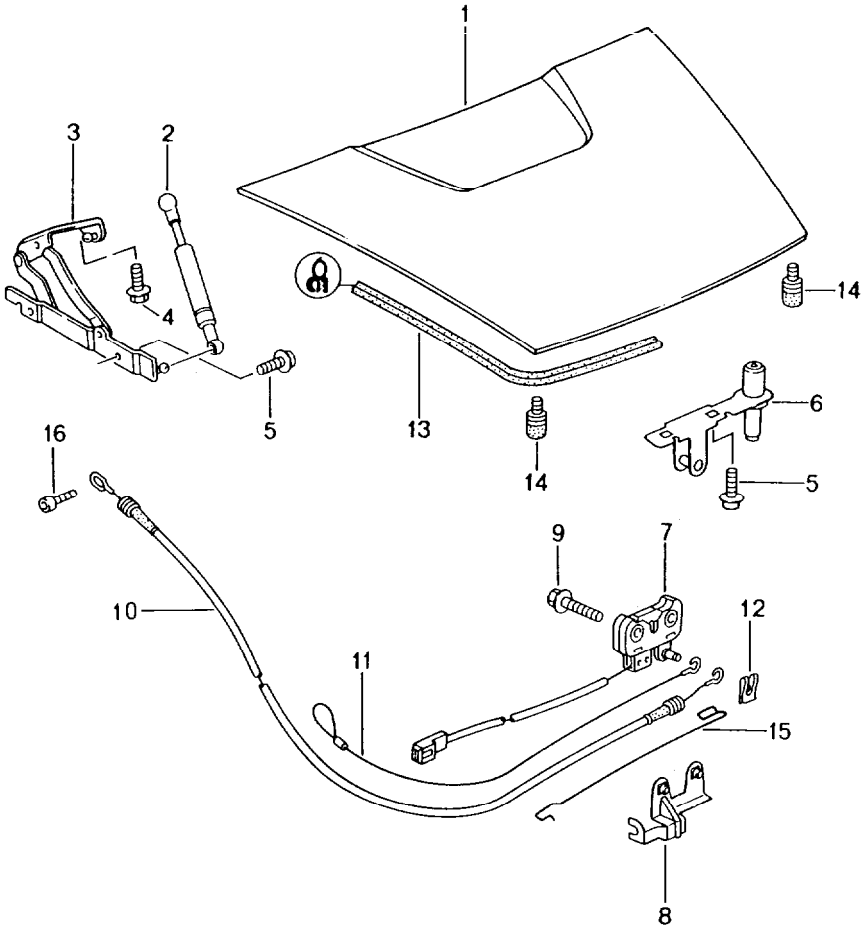


| Pos | Part Number | Description | Remark | Qty | Model |
|---|---|---|---|---|---|
| | | lid<br>rear | | | |
| 1 | A 986 512 011 01 | lid | | 1 | |
| | GRV | prime coated<br>use also: | | | |
| 1 | 986 512 011 02 | lid | | 1 | |
| | GRV | prime coated<br>use also: | | | |
| - | 000 043 204 38 | sealing material | | 1 | |
| 2 | 986 512 951 00 | gas-pressure spring | | 2 | |
| 3 | 986 512 151 01 | hinge | /L | 1 | |
| (3) | 986 512 152 01 | hinge | /R | 1 | |
| 4 | 900 075 466 09 | combination screw<br>M 6 X 16 | | 4 | |
| 5 | 900 378 155 09 | combination screw<br>M 6 X 16 | | 6 | |
| (6) | 986 512 051 00 | lock upper part | | 1 | |
| 7 | A 986 512 053 01 | lock lower part | -01 | 1 | |
| 7 | 986 512 053 02 | lock lower part | | 1 | |
| - | 999 652 750 40 | plug socket | | 1 | |
| - | 999 652 567 22 | connector | | 2 | |
| 8 | 996 512 753 02 | mounting plate | | 1 | |
| (8) | 986 512 753 00 | mounting plate | | 1 | |
| 9 | 900 378 168 09 | hexagon-head bolt<br>M 6 X 30 | | 2 | |
| 10 | 986 512 017 01 | traction | /LL | 1 | |
| (10) | 986 512 018 00 | traction | /RL | 1 | |
| 11 | 996 512 521 00 | emergency operation | | 1 | |
| 12 | 999 166 054 02 | sl-lock | | 1 | |
| 13 | 986 512 611 00 | gasket | | 1 | |
| 14 | 999 703 140 40 | buffer | | 2 | |
| 15 | 986 504 719 00 | pull rod | | 1 | M 534/535 |

| Pos | Part Number | Description | Remark | Qty | Model | Pos | Part Number | Description | Remark | Qty | Model |
|---|---|---|---|---|---|---|---|---|---|---|---|
| 16 | 900 119 121 09 | cylinder lock<br>M 4 X 14 | | 1 | | | | | | | |

| Model | Year | MG | SG | Illustration | Restrictions | UPD | 18:28 | 30.07.2008 | PET |
|---|---|---|---|---|---|---|---|---|---|
| 986 | 2004 | 8 | 03 | 803-07 | | 229 | | | |

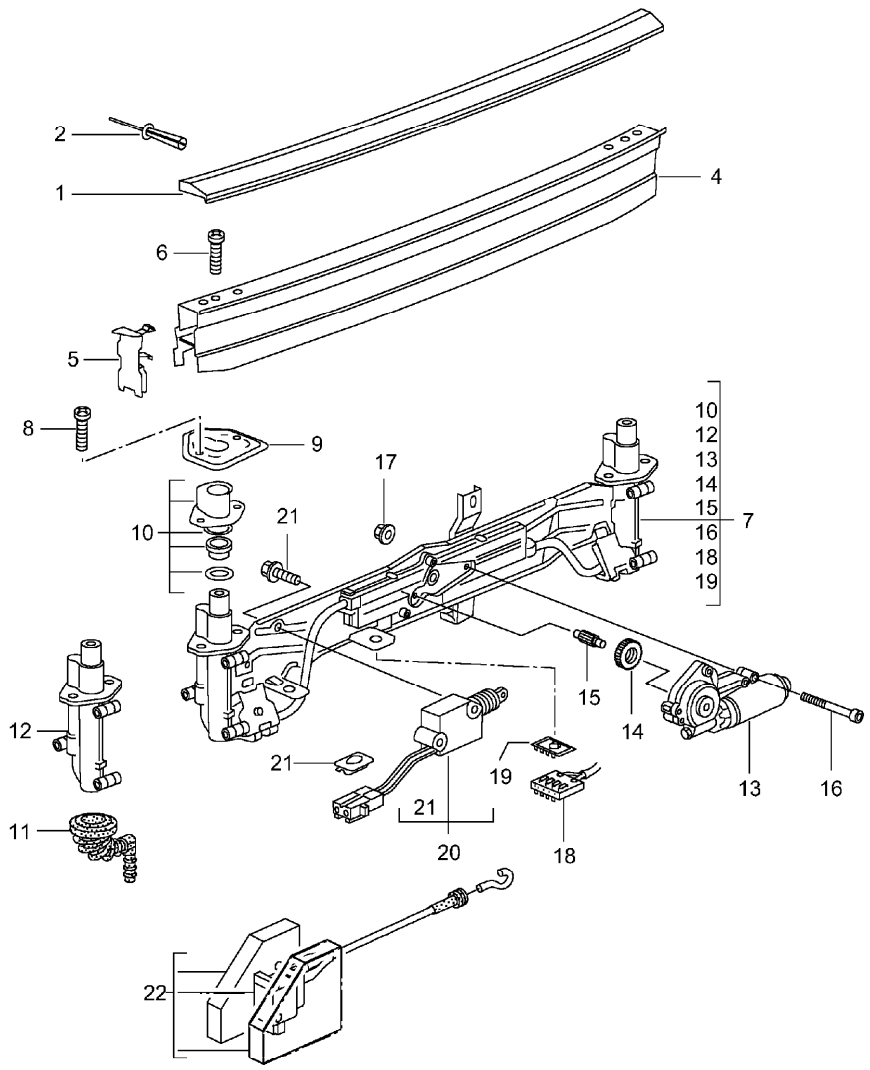


| Pos | Part Number | Description | Remark | Qty | Model |
|---|---|---|---|---|---|
| | | rear spoiler | | | |
| 1 | 986 504 609 01 | upper part | -02 | 1 | |
| | G2X | prime coated | | | |
| 1 | 986 504 609 02 | upper part | 03- | 1 | |
| | G2X | prime coated | | | |
| (2) | 999 507 499 40 | expansion rivet<br>5,0 X 11,5 | | 3 | |
| 4 | 986 504 613 01 | bracket | -02 | 1 | |
| 4 | 986 504 613 02 | bracket | 03- | 1 | |
| 5 | 986 504 615 01 | cover | /L -02 | 1 | |
| 5 | 986 504 615 02 | cover | /L 03- | 1 | |
| (5) | 986 504 616 01 | cover | /R -02 | 1 | |
| (5) | 986 504 616 02 | cover | /R 03- | 1 | |
| 6 | 999 218 016 02 | pan-head screw<br>M 6 X 16<br>micro-self-locking | | 2 | |
| 7 | 986 504 109 00 | driving mechanism | | 1 | |
| - | 999 652 919 40 | plug socket | | 1 | |
| - | 999 652 567 22 | connector | | 5 | |
| 8 | 999 218 016 02 | pan-head screw<br>M 6 X 16<br>micro-self-locking | | 4 | |
| 9 | 986 504 251 00 | mounting plate | | 2 | |
| 10 | 986 504 913 00 | seal | | 2 | |
| 11 | 986 504 915 00 | water drain hose | | 1 | |
| 12 | 986 504 911 00 | hinge | /L | 1 | |
| (12) | 986 504 912 00 | hinge | /R | 1 | |
| 13 | 996 624 151 00 | electric motor | | 1 | |
| 14 | 986 504 261 00 | spur gear | | 1 | |
| 15 | 986 504 263 00 | axle | | 1 | |

| Pos | Part Number | Description | Remark | Qty | Model |
|---|---|---|---|---|---|
| 16 | 900 074 364 02 | hexagon-head bolt<br>M 5 X 55<br>micro-self-locking | | 3 | |
| 17 | 900 377 009 02 | hexagon nut<br>M 5 | | 3 | |
| 18 | 999 652 918 40 | connector housing | | 1 | |
| 19 | 999 650 175 40 | support | | 1 | |
| 20 | 996 624 117 00 | actuator | -00 | 1 | M 534,M 535 |
| - | 999 652 749 40 | plug socket | | 1 | |
| - | 999 652 567 22 | connector | | 2 | |
| 21 | 999 507 434 40 | support | | 1 | M 534,M 535 |
| 22 | 986 512 117 00 | actuator | 01- | 1 | M 534,M 535 |

| Pos | Part Number | Description | Remark | Qty | Model |
|---|---|---|---|---|---|

| Model | Year | MG | SG | Illustration | Restrictions | UPD | 18:28 | 30.07.2008 | PET |
|---|---|---|---|---|---|---|---|---|---|
| 986 | 2004 | 8 | 04 | 804-00 | | 229 | | | |

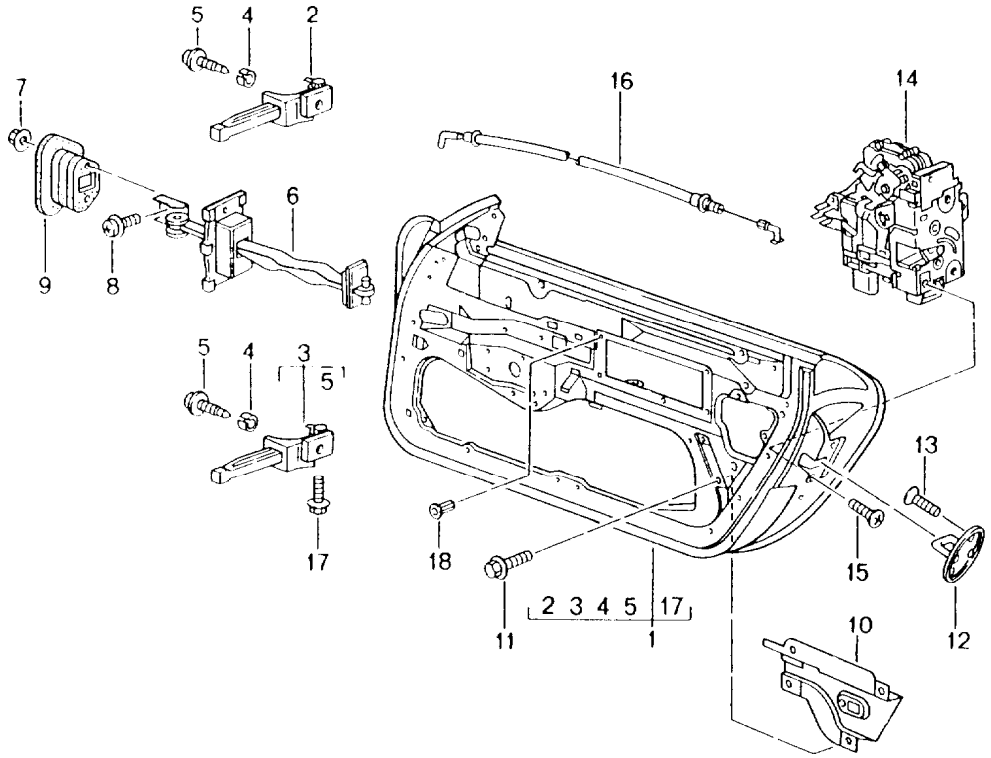


| Pos | Part Number | Description | Remark | Qty | Model |
|---|---|---|---|---|---|
| | | door in white<br>installation parts<br>door lock | | | |
| (1) | 996 531 011 02 | door in white | /L | 1 | |
| | GRV | prime coated<br>use also:<br>POS.17<br>see technical information<br>group 5<br>4/00 | | | |
| 1 | 996 531 012 02 | door in white | /R | 1 | |
| | GRV | prime coated<br>use also:<br>POS.17<br>see technical information<br>group 5<br>4/00 | | | |
| - | 000 043 204 38 | sealing material | | 1 | |
| (2) | 996 531 321 04 | hinge | /L | 1 | |
| 2 | 996 531 322 04 | hinge | /R | 1 | |
| (3) | 996 531 319 03 | hinge | /L | 1 | |
| 3 | 996 531 320 03 | hinge | /R | 1 | |
| 4 | 996 531 831 00 | sleeve | | 4 | |
| 5 | 999 073 192 02 | pan-head screw<br>M 8 X 33 | | 2 | |
| 6 | 996 537 151 02 | door arrester | | 2 | |
| 7 | 999 084 212 02 | nut<br>M 6 | | 4 | |
| 8 | 999 073 138 09 | screw<br>M 8 X 25 | | 2 | |
| 9 | 996 537 751 00 | seal | | 2 | |
| (10) | 996 537 523 00 | bracket | /L | 1 | |
| | GRV | prime coated | | | |
| 10 | 996 537 524 00 | bracket | /R | 1 | |
| | GRV | prime coated | | | |
| 11 | 900 075 487 09 | combination screw<br>M 6 X 16 | | 10 | |

| Pos | Part Number | Description | Remark | Qty | Model |
|---|---|---|---|---|---|
| 12 | A 3B0 837 033 F | closing element | | 2 | |
| 12 | 3B0 837 033 P | closing element | | 2 | |
| 13 | N 907 985 02 | countersunk-head screw<br>M 8 X 16,5 | | 4 | |
| (14) | 3B1 837 015 A | door lock | /LL/L97 | 1 | |
| (14) | A 8N1 837 015 | door lock | /LL/L98- | 1 | |
| (14) | 8N1 837 015 B | door lock | /LL/L98- | 1 | |
| 14 | 3B1 837 016 A | door lock | /LL/R97 | 1 | |
| 14 | A 8N1 837 016 | door lock | /LL/R98- | 1 | |
| 14 | 8N1 837 016 B | door lock | /LL/R98- | 1 | |
| (14) | 3B1 837 016 C | door lock | /LL/R97 | 1 | M 534/M 535 |
| (14) | 3B1 837 016 M | door lock | /LL/R98- | 1 | M 534/M 535 |
| (14) | 3B2 837 015 A | door lock | /RL/L97 | 1 | |
| (14) | A 8N2 837 015 | door lock | /RL/L98- | 1 | |
| (14) | 8N2 837 015 B | door lock | /RL/L98- | 1 | |
| (14) | 3B2 837 015 B | door lock | /RL/L97 | 1 | M 534/M 535 |
| (14) | 3B2 837 015 F | door lock | /RL/L98- | 1 | M 534/M 535 |
| (14) | 3B2 837 016 A | door lock | /RL/R97 | 1 | |
| (14) | A 8N2 837 016 | door lock | /RL/R98- | 1 | |
| (14) | 8N2 837 016 B | door lock | /RL/R98- | 1 | |
| 15 | N 908 005 01 | screw<br>M 8 X 14 | | 4 | |
| 16 | 996 537 320 03 | bowden cable<br>see technical information<br>group 5<br>4/98 | | 2 | |
| 17 | 999 072 043 09 | hexagon-head bolt<br>M 6 X 12<br>micro-self-locking | | 4 | |
| 18 | 999 500 066 02 | blind rivet nut<br>M 6/0,5 - 3 | | 6 | M 563 |

| Pos | Part Number | Description | Remark | Qty | Model |
|---|---|---|---|---|---|

| Model | Year | MG | SG | Illustration | Restrictions | UPD | 18:28 | 30.07.2008 | PET |
|---|---|---|---|---|---|---|---|---|---|
| 986 | 2004 | 8 | 04 | 804-10 | | 229 | | | |

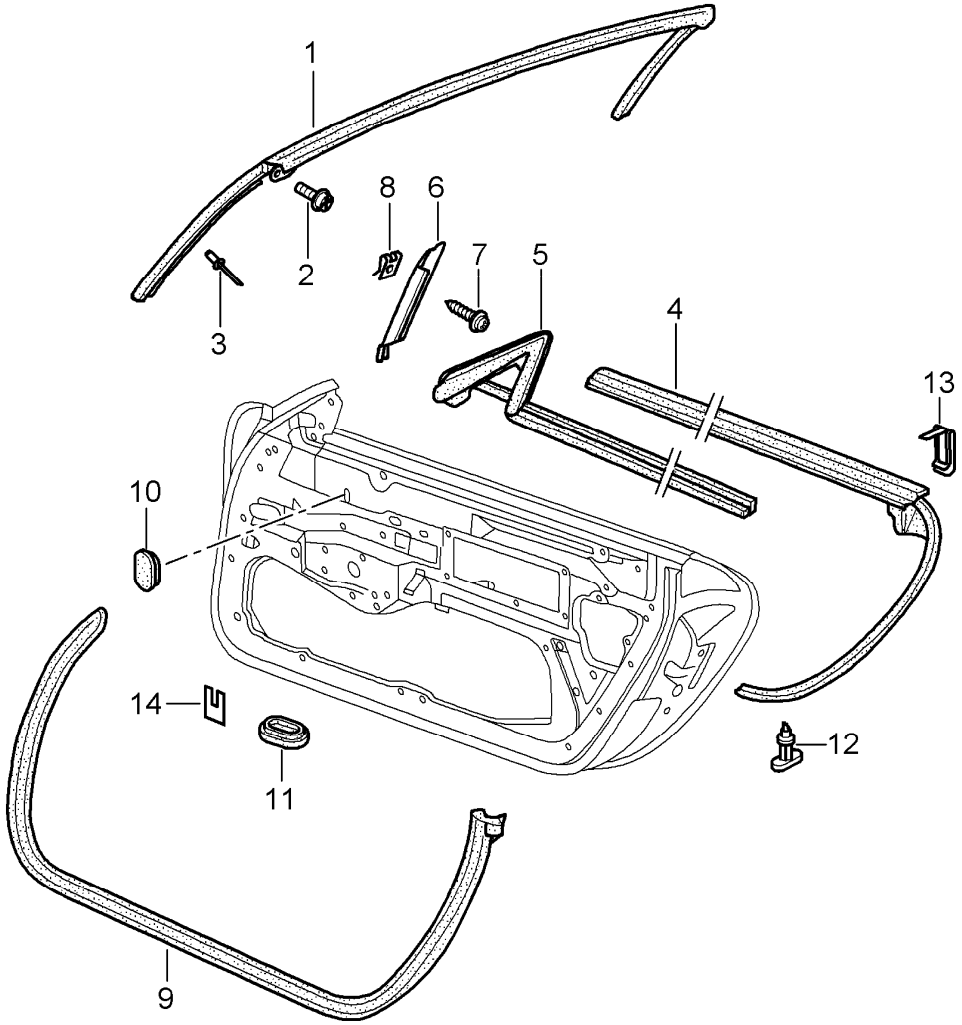


| Pos | Part Number | Description | Remark | Qty | Model |
|---|---|---|---|---|---|
| | | door seal<br>gasket<br>windscreen frame | | | |
| 1 | 986 537 077 02 | gasket | | 1 | |
| 2 | 900 075 483 02 | combination screw<br>M 5 X 20 | | 2 | |
| 3 | A 999 190 426 37 | blind rivet<br>A 4,0 X 9,5 | | 8 | |
| 3 | 999 190 445 37 | rivet<br>A 4,0 X 7,9 | | 8 | |
| (4) | A 996 537 085 06 | sealing for door slot | /L | 1 | |
| (4) | 996 537 085 07 | gasket<br>outer | /L | 1 | |
| 4 | A 996 537 086 06 | sealing for door slot | /R | 1 | |
| 4 | 996 537 086 07 | gasket<br>outer | /R | 1 | |
| (5) | A 996 537 531 05 | sealing for door slot | /L | 1 | |
| (5) | 996 537 531 06 | gasket<br>inner | /L | 1 | |
| 5 | A 996 537 532 05 | sealing for door slot | /R | 1 | |
| 5 | 996 537 532 06 | gasket<br>inner | /R | 1 | |
| (6) | A 996 537 725 01 | window guide | /L -02 | 1 | |
| (6) | 996 537 725 02 | window guide | /L | 1 | |
| 6 | A 996 537 726 01 | window guide | /R -02 | 1 | |
| 6 | 996 537 726 02 | window guide | /R | 1 | |
| 7 | 999 073 047 02 | tapping screw<br>ST 3,5 X 9,5 | | 2 | |
| 8 | 999 591 725 02 | speed nut<br>ST 3,5 | | 2 | |
| (9) | A 986 537 075 02 | gasket | /L | 1 | |
| (9) | 986 537 901 00 | gasket | /L | 1 | |
| 9 | A 986 537 076 02 | gasket | /R | 1 | |
| 9 | 986 537 902 00 | gasket | /R | 1 | |

| Pos | Part Number | Description | Remark | Qty | Model |
|---|---|---|---|---|---|
| 10 | 999 703 441 40 | lid<br>20 X 28 X 1 | | 4 | |
| 11 | 999 703 417 40 | lid<br>24 X 39 | | 8 | |
| 12 | 999 507 578 40 | clip<br>gasket<br>outer | | 36 | |
| 13 | 999 507 571 02 | clamp | | 2 | |
| - | 996 537 337 00 | protective film | | 4 | |

| Pos | Part Number | Description | Remark | Qty | Model |
|---|---|---|---|---|---|

| Model | Year | MG | SG | Illustration | Restrictions | UPD | 18:29 | 30.07.2008 | PET |
|---|---|---|---|---|---|---|---|---|---|
| 986 | 2004 | 8 | 04 | 804-20 | | 229 | | | |

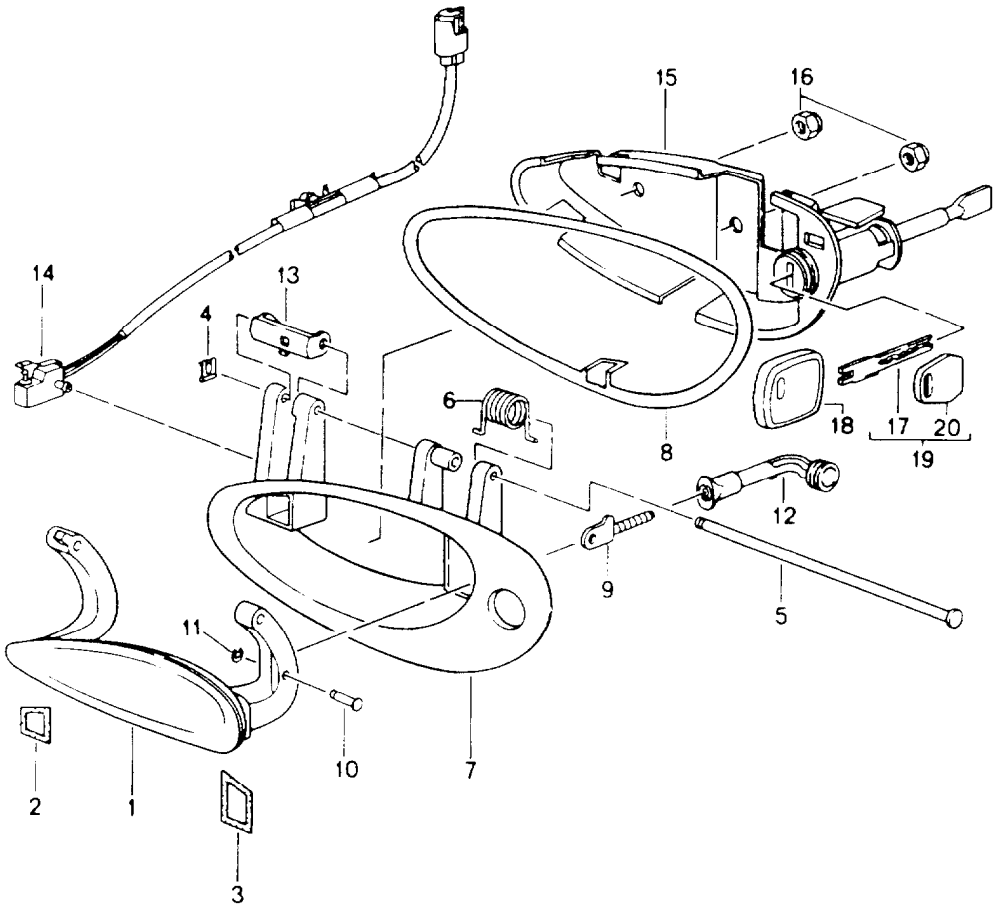


| Pos | Part Number | Description | Remark | Qty | Model |
|---|---|---|---|---|---|
| | | door handle | | | |
| 1 | 996 537 613 00 | handle | /L 97 | 1 | |
| | G2X | prime coated | | | |
| 1 | 996 537 613 01 | handle | /L 98- | 1 | |
| | G2X | prime coated | | | |
| (1) | 996 537 614 00 | handle | /R 97 | 1 | |
| | G2X | prime coated | | | |
| (1) | 996 537 614 01 | handle | /R 98- | 1 | |
| | G2X | prime coated | | | |
| 2 | 996 537 623 01 | buffer | | 2 | |
| 3 | 996 537 625 00 | buffer | | 2 | |
| 4 | 996 537 631 00 | sl-lock | | 2 | |
| 5 | 996 537 621 00 | axle | | 2 | |
| 6 | 996 537 611 00 | return spring | /L | 1 | |
| (6) | 996 537 612 00 | return spring | /R | 1 | |
| 7 | A 996 537 645 00 | handle liner | /LL/L97 | 1 | |
| | G2X | prime coated | | | |
| 7 | 996 537 645 01 | handle liner | /LL/L | 1 | |
| | G2X | prime coated | | | |
| (7) | A 996 537 645 00 | handle liner | /RL/L97 | 1 | M 531 |
| | G2X | prime coated | | | |
| (7) | 996 537 645 01 | handle liner | /RL/L | 1 | M 531 |
| | G2X | prime coated | | | |
| (7) | A 996 537 647 00 | handle liner | /RL/L97 | 1 | M 534/M 535 |
| | G2X | prime coated | | | |
| (7) | 996 537 647 01 | handle liner | /RL/L | 1 | M 534/M 535 |
| | G2X | prime coated | | | |
| (7) | A 996 537 646 00 | handle liner | /LL/R97 | 1 | M 531 |
| | G2X | prime coated | | | |

| Pos | Part Number | Description | Remark | Qty | Model |
|---|---|---|---|---|---|
| (7) | 996 537 646 01 | handle liner | /LL/R | 1 | M 531 |
| | G2X | prime coated | | | |
| (7) | A 996 537 646 00 | handle liner | /RL/R97 | 1 | |
| | G2X | prime coated | | | |
| (7) | 996 537 646 01 | handle liner | /RL/R | 1 | |
| | G2X | prime coated | | | |
| (7) | A 996 537 648 00 | handle liner | /LL/R97 | 1 | M 534/M 535 |
| | G2X | prime coated | | | |
| (7) | 996 537 648 01 | handle liner | /LL/R | 1 | M 534/M 535 |
| | G2X | prime coated | | | |
| 8 | 996 537 637 00 | desk pad | /L | 1 | |
| (8) | 996 537 638 00 | desk pad | /R | 1 | |
| 9 | 996 537 627 00 | control shaft | | 2 | |
| 10 | 996 537 629 00 | bolt | 97 | 2 | |
| 10 | 996 537 629 01 | bolt | 98- | 2 | |
| 11 | 996 537 641 00 | lock washer | | 2 | |
| 12 | 996 537 445 02 | connecting piece | | 2 | |
| 13 | 996 537 653 00 | eccentric | /L | 1 | |
| (13) | 996 537 654 00 | eccentric | /R | 1 | |
| 14 | 996 613 125 00 | microswitch<br>power windows | /L | 1 | |
| (14) | 996 613 126 00 | microswitch<br>power windows | /R | 1 | |
| 15 | 996 537 963 02 | support<br>with lock cylinder<br>w/o stipulated lock number | /L | 1 | |
| (15) | 996 537 964 02 | support<br>with lock cylinder<br>w/o stipulated lock number | /R | 1 | |
| 15 | 996 537 963 03 | support<br>with lock cylinder<br>with stipulated lock number<br>state lock number | /L | 1 | |
| (15) | 996 537 964 03 | support<br>with lock cylinder<br>with stipulated lock number<br>state lock number | /R | 1 | |
| (15) | 996 537 063 03 | support<br>without lock cylinder | /RL/L | 1 | |
| (15) | 996 537 064 03 | support<br>without lock cylinder | /LL/R | 1 | |
| 16 | 900 380 015 09 | nut<br>M 6 | | 4 | |
| 17 | 996 538 531 00 | blank key | | X | |
| 18 | 996 538 423 00 | key cap | 97 | X | |
| 18 | 996 538 423 01 | key cap | 98- | X | |
| 19 | 996 538 932 00 | replacement key<br>with stipulated lock number<br>state lock number<br>Information available | | X | |
| 20 | 944 538 431 00 | key cap | | X | |

| Model | Year | MG | SG | Illustration | Restrictions | UPD | 18:29 | 30.07.2008 | PET |
|---|---|---|---|---|---|---|---|---|---|
| 986 | 2004 | 8 | 04 | 804-30 | | 229 | | | |

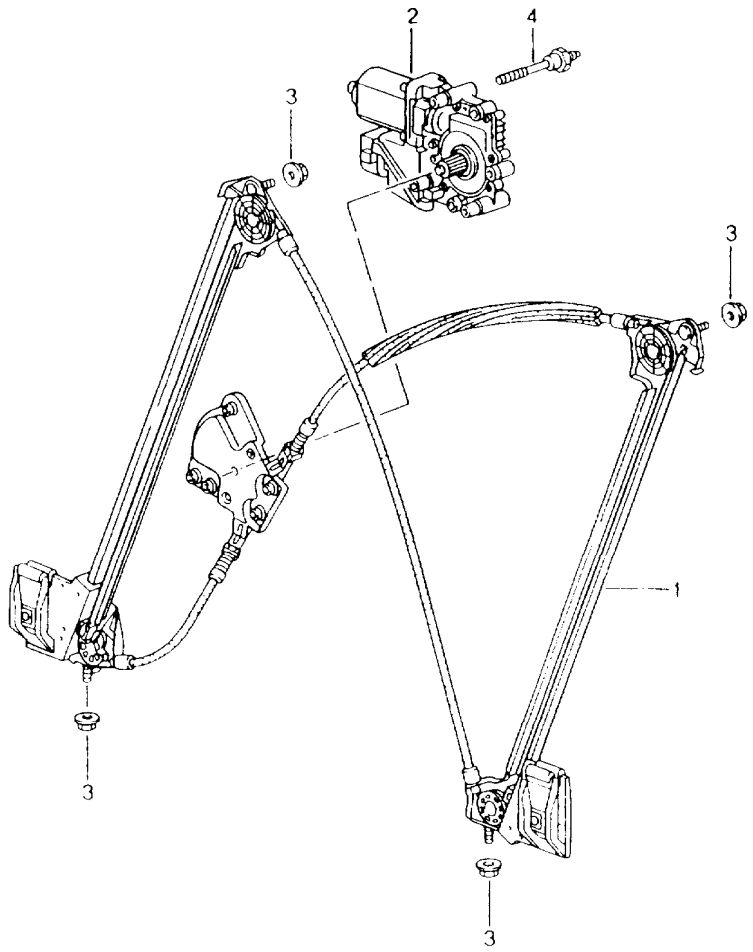


| Pos | Part Number | Description | Remark | Qty | Model |
|---|---|---|---|---|---|
| | | power windows | | | |
| (1) | 996 542 075 04 | power windows | /L | 1 | |
| 1 | 996 542 076 04 | power windows | /R | 1 | |
| (2) | 986 624 101 02 | electric motor | /L -02 | 1 | |
| (2) | 986 624 101 03 | electric motor | /L 03- | 1 | |
| 2 | 986 624 102 02 | electric motor | /R -02 | 1 | |
| 2 | 986 624 102 03 | electric motor | /R 03- | 1 | |
| 3 | 900 380 015 09 | nut<br>M 6 | | 14 | |
| 4 | 996 542 711 00 | threaded bolt | | 6 | |
| | | microswitch<br>lowering<br>door window glass<br>see group<br>8/04/20<br>POS. 14 | | | |

| Model | Year | MG | SG | Illustration | Restrictions | UPD | 18:29 | 30.07.2008 | PET |
|---|---|---|---|---|---|---|---|---|---|
| 986 | 2004 | 8 | 05 | 805-00 | | 229 | | | |

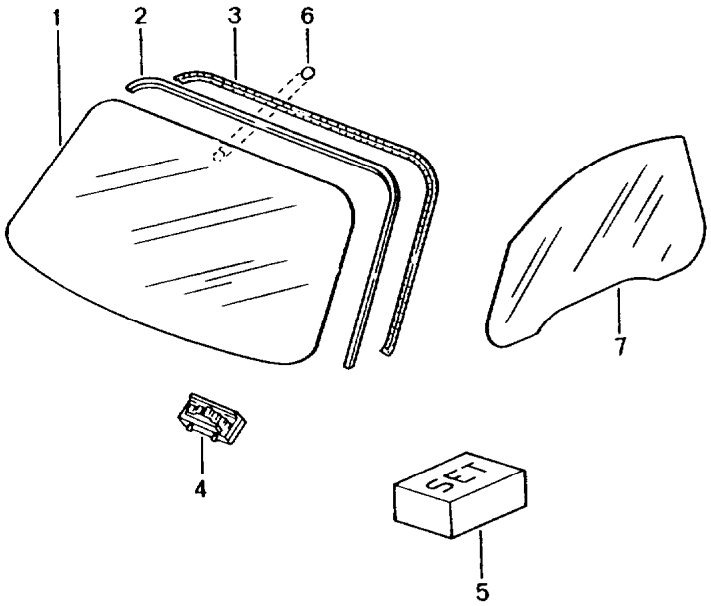


| Pos | Part Number | Description | Remark | Qty | Model |
|---|---|---|---|---|---|
| | | window glazing | | | |
| 1 | 986 541 901 02 | windscreen<br>tinted | | 1 | |
| 1 | 986 541 901 04 | windscreen<br>tinted | 01- | 1 | M 265 |
| (1) | 986 541 901 03 | windscreen<br>tinted<br>green top tint | | 1 | |
| (1) | 986 541 901 05 | windscreen<br>tinted<br>green top tint | 01- | 1 | M 265 |
| (1) | 986 541 901 06 | windscreen<br>tinted | 03- | 1 | M 440 |
| (1) | 986 541 901 07 | windscreen<br>tinted<br>green top tint | 03- | 1 | M 440 |
| (1) | 986 541 901 08 | windscreen<br>tinted | 03- | 1 | M 440,M 265 |
| (1) | 986 541 901 09 | windscreen<br>tinted<br>green top tint | 03- | 1 | M 440,M 265 |
| 2 | 986 541 521 01 | sealing frame<br>F >>98XS6 03402 | | 1 | |
| (2) | 996 541 531 01 | sealing frame<br>it is necessary to rework<br>F 98XS6 03403>> | | 1 | |
| (2) | 996 541 531 01 | sealing frame<br>it is necessary to rework | 00- | 1 | M 008 |
| 3 | 986 541 541 01 | trim frame<br>F 98XS6 03403>> | -00 | 1 | |
| 3 | 986 541 541 03 | trim frame | 01- | 1 | |
| (3) | 986 541 541 00 | trim frame | -00 | 1 | M 008 |
| | 9A4 | titanium metallic | | | |
| (3) | 986 541 541 02 | trim frame | 01- | 1 | M 008 |
| | 9A4 | titanium metallic | | | |
| 4 | 999 507 576 41 | support | | 2 | |
| 5 | 000 043 300 94 | adhesive set<br>TEROSTAT 8593 | | 1 | |

| Pos | Part Number | Description | Remark | Qty | Model |
|---|---|---|---|---|---|
| 6 | 000 731 513 00 | adhesive plate<br>for<br>interior mirror | | 1 | |
| 7 | 986 542 511 00 | door window glass | /L | 1 | |
| (7) | 986 542 512 00 | door window glass | /R | 1 | |

| Model | Year | MG | SG | Illustration | Restrictions | UPD | 18:29 | 30.07.2008 |
|---|---|---|---|---|---|---|---|---|
| 986 | 2004 | 8 | 07 | 807-00 | | 229 | | |

PORSCHE PET PORSCHE

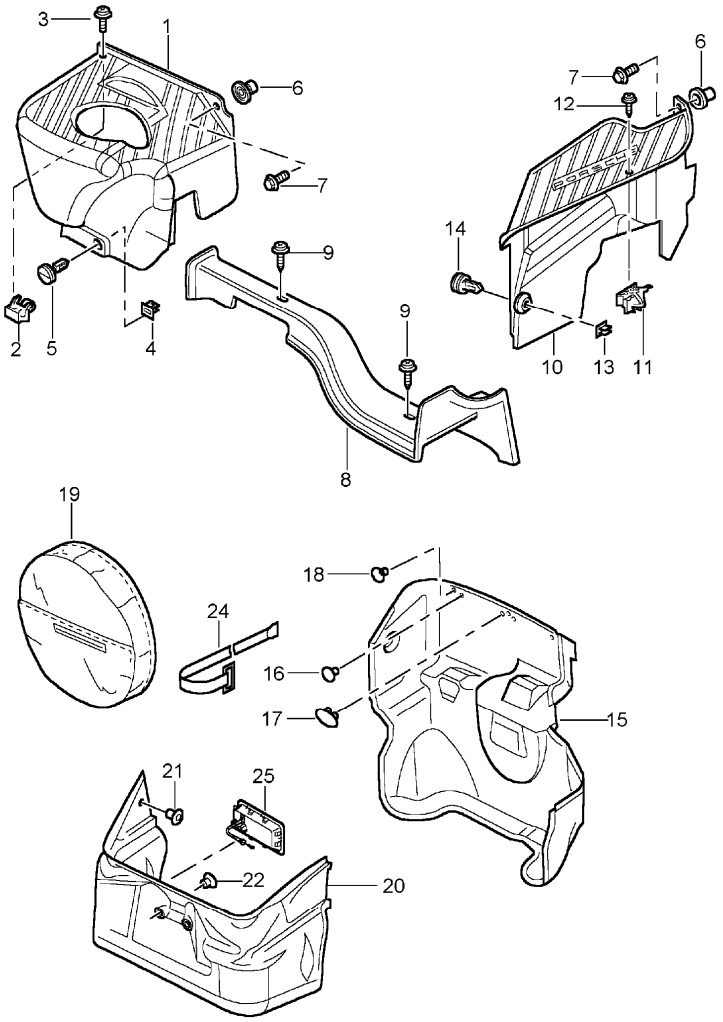


| Pos | Part Number | Description | Remark | Qty | Model |
|---|---|---|---|---|---|
| | | luggage compartment<br>front | | | |
| 1 | 996 551 133 04 | lining<br>brake booster | /RL/R | 1 | |
| | 01C | satin black | | | |
| (1) | 996 551 131 03 | lining<br>brake booster | /LL/L | 1 | |
| | 01C | satin black | | | |
| 2 | 999 507 512 40 | support<br>3,5 | | 1 | |
| 3 | 999 919 151 09 | oval-head screw<br>3,5 X 18 | | 1 | |
| 4 | 999 590 046 40 | disc cam<br>10,0 X 11,5 | | 1 | |
| 5 | 999 507 529 40 | catch<br>18,0 | | 1 | |
| 6 | 999 500 078 00 | nut<br>M 6 | | 1 | |
| 7 | 900 378 188 09 | hexagon-head bolt<br>M 6 X 20 | | 1 | |
| 8 | 996 551 137 01 | lining<br>pipeline | /RL | 1 | |
| | 01C | satin black | | | |
| 9 | 999 919 151 09 | screw<br>3,5 X 18 | | 2 | |
| 10 | 996 551 135 01 | lining<br>hydraulic unit | /RL/L-99 | 1 | |
| | 01C | satin black | | | |
| 10 | 996 551 135 02 | lining<br>hydraulic unit | /RL/L00- | 1 | |
| | 01C | satin black | | | |
| (10) | 996 551 135 03 | lining<br>hydraulic unit | /RL/L03- | 1 | M692 |
| | 01C | satin black | | | |
| 11 | 999 507 512 40 | support | /RL | 1 | |

| Pos | Part Number | Description | Remark | Qty | Model |
|---|---|---|---|---|---|
| 11 | 999 507 512 40 | support<br>3,5 | /LL | 3 | |
| (11) | 996 551 771 00 | support | | 1 | |
| 12 | 999 919 151 09 | oval-head screw | /RL | 1 | |
| 12 | 999 919 151 09 | oval-head screw<br>3,5 X 18 | /LL | 3 | |
| 13 | 999 590 046 40 | disc cam | /RL | 1 | |
| 13 | 999 590 046 40 | disc cam<br>10,0 X 11,5 | /LL | 2 | |
| 14 | 999 507 529 40 | catch | /RL | 1 | |
| 14 | 999 507 529 40 | catch<br>18,0 | /LL | 2 | |
| 15 | A 996 551 051 02 | lining<br>luggage compartment<br>when used up | /LL 97 | 1 | |
| | | order also:<br>winged nut<br>900.029.004.02 | 97 | | |
| | C10 | grey | | | |
| (15) | A 996 551 051 03 | lining<br>luggage compartment<br>when used up | /RL 97 | 1 | |
| | | order also:<br>winged nut<br>900.029.004.02 | 97 | | |
| | C10 | grey | | | |
| 15 | 996 551 051 14 | lining<br>luggage compartment | /LL -00 | 1 | |
| | C10 | grey | | | |
| (15) | 996 551 051 15 | lining<br>luggage compartment | /RL -00 | 1 | |
| | C10 | grey | | | |
| 15 | 996 551 051 16 | lining<br>luggage compartment | /LL 01- | 1 | |
| | A31 | black | | | |
| (15) | 996 551 051 17 | lining<br>luggage compartment | /RL 01- | 1 | |
| | A31 | black | | | |

| Pos | Part Number | Description | Remark | Qty | Model |
|---|---|---|---|---|---|
| 16 | 999 703 432 40 | stopper<br>8,0<br>12,2 X 25 | | 8 | |
| 17 | 999 703 456 40 | cap<br>49 X 26<br>12,2 X 25 | | 1 | |
| 18 | 999 703 455 40 | cap<br>12,2 X 25 | | 2 | |
| 19 | 996 551 061 00 | lining | | 1 | |
| 20 | 996 551 045 01 | lining | -00 | 1 | |
| | C10 | grey | | | |
| (20) | A 996 551 045 06 | lining | /V_01-02 | 1 | |
| | A31 | black | | | |
| 20 | 996 551 045 08 | lining | 02- | 1 | |
| | A31 | black | | | |
| 21 | 999 703 432 40 | stopper<br>8,0 | | 2 | |
| 22 | 999 507 565 40 | plastic nut<br>T5/ 24,15 | | 2 | |
| (22) | 999 507 566 40 | plastic nut<br>T5/ 39,70 | | 1 | |
| 24 | 996 551 741 00 | retaining strap<br>first-aid kit | | 1 | |
| (24) | 996 551 725 00 | retaining strap<br>tool bag | | 1 | |

| Model | Year | MG | SG | Illustration | Restrictions | UPD | 18:29 | 30.07.2008 | PET |
|---|---|---|---|---|---|---|---|---|---|
| 986 | 2004 | 8 | 07 | 807-01 | | 229 | | | |

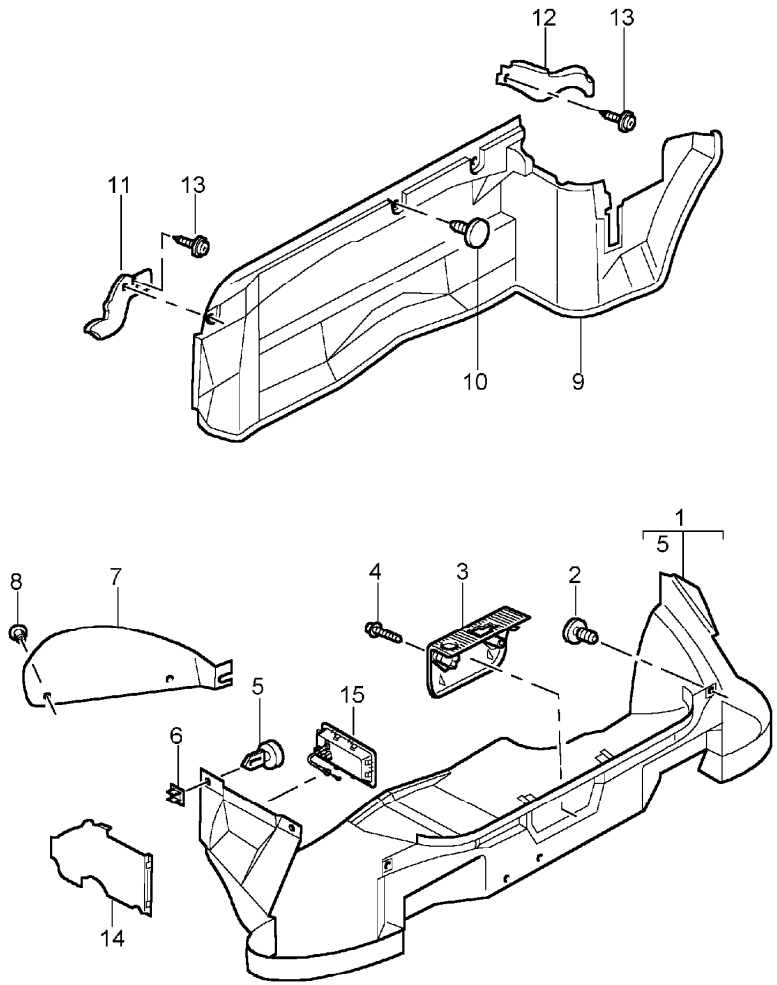


| Pos | Part Number | Description | Remark | Qty | Model |
|---|---|---|---|---|---|
| | | luggage compartment<br>rear | | | |
| 1 | 986 551 053 05 | lining<br>luggage compartment | -00 | 1 | |
| | C10 | grey | | | |
| 1 | 986 551 053 05 | lining | 01- | 1 | |
| | A31 | black | | | |
| 2 | 999 703 432 40 | stopper<br>8,0 | | 3 | |
| 3 | 986 551 251 00 | lining<br>lid lock | | 1 | |
| | 01C | satin black | | | |
| 4 | 900 143 187 09 | combination screw<br>4,8 X 32 | | 2 | |
| 5 | 999 507 529 40 | catch<br>18,0 | | 2 | |
| 6 | 999 590 046 40 | disc cam<br>10,0 X 11,5 | | 2 | |
| 7 | 986 551 651 00 | cover<br>rear light | /L -00 | 1 | |
| | C10 | grey | | | |
| (7) | 986 551 652 00 | cover<br>rear light | /R -00 | 1 | |
| | C10 | grey | | | |
| 7 | 986 551 651 01 | cover<br>rear light | /L 01- | 1 | |
| | A31 | black | | | |
| (7) | 986 551 652 01 | cover<br>rear light | /R 01- | 1 | |
| | A31 | black | | | |
| 8 | 999 049 020 40 | plastic nut<br>T5/30 X 5,1 | | 6 | |
| 8 | 999 049 024 40 | plastic nut<br>T5/40 X 8 | | 2 | |
| 9 | 986 551 045 02 | lining<br>luggage compartment | -00 | 1 | |

| Pos | Part Number | Description | Remark | Qty | Model |
|---|---|---|---|---|---|
| | C10 | grey | | | |
| 9 | 986 551 045 03 | lining<br>luggage compartment | 01- | 1 | |
| | A31 | black | | | |
| 10 | 999 703 432 40 | stopper<br>8,0 | | 3 | |
| (11) | 986 551 321 01 | bleeding | /L -02 | 1 | |
| (11) | 986 551 723 00 | support | /L 03- | 1 | |
| (12) | 986 551 322 01 | bleeding | /R -02 | 1 | |
| (12) | 986 551 723 00 | support | /R 03- | 1 | |
| 13 | 999 073 061 02 | tapping screw<br>4,8 X 16 | | 3 | |
| 14 | 986 551 763 01 | reinforcement | /L | 1 | |
| (14) | 986 551 764 01 | reinforcement | /R | 1 | |
| (14) | 986 551 761 00 | reinforcement<br>centre part | | 1 | |

| Pos | Part Number | Description | Remark | Qty | Model |
|---|---|---|---|---|---|

| Model | Year | MG | SG | Illustration | Restrictions | UPD | 18:30 | 30.07.2008 | PET |
|---|---|---|---|---|---|---|---|---|---|
| 986 | 2004 | 8 | 07 | 807-02 | | 229 | | | |

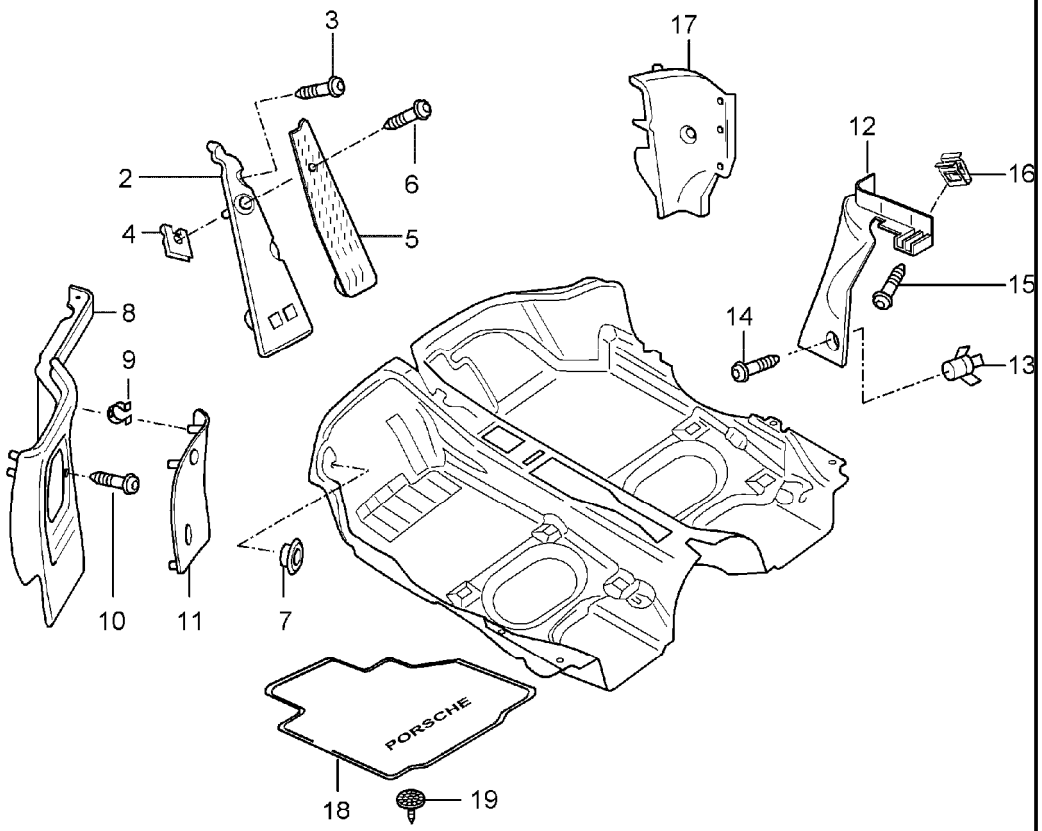


| Pos | Part Number | Description | Remark | Qty | Model |
|---|---|---|---|---|---|
| | | interior equipment<br>carpet<br>linings | | | |
| 1 | 986 551 011 02 | carpet<br>carpet | /LL | 1 | |
| | EEW | black | | | |
| | EEX | graphite grey | | | |
| | EEY | savanna | | | |
| | EFB | nephrite green | -00 | | |
| | FAR | nephrite green | 01- | | |
| | EFC | boxster red | | | |
| | EEZ | metropole blue | 98- | | |
| | VRL | dark grey | 00- | | |
| | VRM | brown/natural | 00- | | |
| | FAP | cinnamon brown | 01- | | |
| | FKF | cocoa | 04 | | |
| (1) | 986 551 011 03 | carpet<br>carpet | /RL | 1 | |
| | EEW | black | | | |
| | EEX | graphite grey | | | |
| | EEY | savanna | | | |
| | EFB | nephrite green | -00 | | |
| | FAR | nephrite green | 01- | | |
| | EFC | boxster red | | | |
| | EEZ | metropole blue | 98- | | |
| | VRL | dark grey | 00- | | |
| | VRM | brown/natural | 00- | | |
| | FAP | cinnamon brown | 01- | | |
| | FKF | cocoa | 04 | | |
| - | 996 551 813 00 | protective film | /LL | 1 | |

| Pos | Part Number | Description | Remark | Qty | Model |
|---|---|---|---|---|---|
| - | 996 551 815 00 | protective film<br>carpet | /RL | 1 | |
| | EAQ | black | | | |
| | EAR | graphite grey | | | |
| | EAS | savanna | | | |
| | EAT | nephrite green | | | |
| | EAU | boxster red | | | |
| | EBU | metropole blue | 98- | | |
| | VRN | dark grey | 00- | | |
| | VRO | brown/natural | 00- | | |
| | FBZ | cinnamon brown | 01- | | |
| | FKJ | cocoa | 04 | | |
| 2 | 996 551 211 00 | foot support | /LL | 1 | |
| (2) | 996 551 212 00 | foot support | /RL | 1 | |
| 3 | 999 073 062 02 | tapping screw<br>4,8 X 19 | /LL | 2 | |
| (3) | 900 143 155 09 | tapping screw<br>4,8 X 32 | /RL | 1 | |
| 4 | 999 591 485 02 | speed nut<br>4,8 | /RL | 2 | |
| 5 | 996 551 611 00 | cover | /LL | 1 | |
| (5) | 996 551 612 00 | cover<br>foot support | /RL | 1 | |
| 6 | 999 919 161 09 | oval-head screw<br>5,0 X 18 | /LL | 1 | |
| (6) | 900 143 155 02 | oval-head screw<br>4,8 X 32 | /RL | 1 | |
| 7 | 803 803 583 A | lid<br>20,0 X 30,0 | | 2 | |
| 8 | 996 551 101 00 | lining<br>carpet | /LL | 1 | |
| | EAQ | black | | | |
| | EAR | graphite grey | | | |
| | EAS | savanna | | | |
| | EAT | nephrite green | | | |
| | EAU | boxster red | | | |
| | EBU | metropole blue | 98- | | |
| | VRN | dark grey | 00- | | |
| | VRO | brown/natural | 00- | | |
| | FBZ | cinnamon brown | 01- | | |
| | FKJ | cocoa | 04 | | |
| (8) | 996 551 102 00 | lining<br>carpet | /RL | 1 | |
| | EAQ | black | | | |
| | EAR | graphite grey | | | |
| | EAS | savanna | | | |
| | EAT | nephrite green | | | |
| | EAU | boxster red | | | |
| | EBU | metropole blue | 98- | | |
| | VRN | dark grey | 00- | | |
| | VRO | brown/natural | 00- | | |
| | FBZ | cinnamon brown | 01- | | |
| | FKJ | cocoa | 04 | | |
| 9 | 999 507 552 01 | spring clamp<br>9,0 X 13 | | 2 | |
| 10 | 999 919 161 09 | oval-head screw<br>5,0 X 18 | | 4 | |
| 11 | 996 551 621 00 | lid | /LL | 1 | |
| | 01C | satin black | | | |
| (11) | 996 551 622 00 | lid | /RL | 1 | |
| | 01C | satin black | | | |
| (12) | 986 551 215 00 | lining<br>seat belt<br>carpet | /L 97 | 1 | |
| | EDX | black | | | |
| | EDY | graphite grey | | | |
| | EDZ | savanna | | | |
| | EFJ | nephrite green | | | |
| | EFK | boxster red | | | |
| 12 | 986 551 216 00 | lining<br>seat belt<br>carpet | /R 97 | 1 | |
| | EDX | black | | | |
| | EDY | graphite grey | | | |
| | EDZ | savanna | | | |
| | EFJ | nephrite green | | | |

| Pos | Part Number | Description | Remark | Qty | Model |
|---|---|---|---|---|---|
| | EFK | boxster red | | | |
| (12) | 986 551 215 00 | lining<br>seat belt<br>carpet | /L 98-99 | 1 | M011/012/016 |
| | EDX | black | | | |
| | EDY | graphite grey | | | |
| | EDZ | savanna | | | |
| | EFJ | nephrite green | | | |
| | EFK | boxster red | | | |
| | EFH | metropole blue | 98- | | |
| 12 | 986 551 216 00 | lining<br>seat belt<br>carpet | /R 98-99 | 1 | M011/012/016 |
| | EDX | black | | | |
| | EDY | graphite grey | | | |
| | EDZ | savanna | | | |
| | EFJ | nephrite green | | | |
| | EFK | boxster red | | | |
| | EFH | metropole blue | 98- | | |
| (12) | 986 551 215 01 | lining<br>seat belt | /L 99 | 1 | M010 |
| | EMB | black | | | |
| | EMC | graphite grey | | | |
| | EMD | savanna | | | |
| | EME | metropole blue | | | |
| | EMF | nephrite green | | | |
| | EMG | boxster red | | | |
| 12 | 986 551 216 01 | lining<br>seat belt | /R 99 | 1 | M010 |
| | EMB | black | | | |
| | EMC | graphite grey | | | |
| | EMD | savanna | | | |
| | EME | metropole blue | | | |
| | EMF | nephrite green | | | |
| | EMG | boxster red | | | |
| (12) | 986 551 215 01 | lining<br>seat belt<br>carpet | /L 00- | 1 | |
| | ERG | black | | | |
| | ERH | graphite grey | | | |
| | ERJ | savanna | | | |
| | ERK | metropole blue | | | |
| | ERL | nephrite green | | | |
| | ERM | boxster red | | | |
| | VSA | dark grey | | | |
| | VSB | brown/natural | | | |
| | FDP | cinnamon brown | 01- | | |
| | FKH | cocoa | 04 | | |
| 12 | 986 551 216 01 | lining<br>seat belt<br>carpet | /R 00- | 1 | |
| | ERG | black | | | |
| | ERH | graphite grey | | | |
| | ERJ | savanna | | | |
| | ERK | metropole blue | | | |
| | ERL | nephrite green | | | |
| | ERM | boxster red | | | |
| | VSA | dark grey | | | |
| | VSB | brown/natural | | | |
| | FDP | cinnamon brown | 01- | | |
| | FKH | cocoa | 04 | | |
| 13 | 999 507 438 40 | support<br>3,5<br>carpet | | 2 | |

| Pos | Part Number | Description | Remark | Qty | Model |
|---|---|---|---|---|---|
| 14 | 999 073 048 02 | tapping screw<br>3,5 X 13<br>carpet | | 2 | |
| 15 | 900 187 103 02 | combination screw<br>4,8 X 16<br>carpet | | 2 | |
| 16 | 999 591 724 02 | speed nut<br>5,5<br>carpet | | 2 | |
| 17 | 996 551 712 00 | support<br>valid up to:<br>F >>98WS6 03037<br>carpet | /LL/R | 1 | |
| 17 | 996 551 712 01 | support<br>valid from:<br>F 98WS6 03036>><br>carpet | /LL/R | 1 | |
| (17) | 996 551 711 00 | support<br>carpet | /RL/L | 1 | |
| -- | 999 073 226 09 | tapping screw<br>4,2 X 16 | | 1 | |
| 18 | 986 551 491 00 | floor mats<br>set<br>pearl velour | /LL 04 | 1 | M091 |
| | R41 | cocoa | | | |
| | A41 | black | | | |
| (18) | 986 551 491 01 | floor mats<br>set<br>pearl velour | /RL 04 | 1 | M091 |
| | R41 | cocoa | | | |
| | A41 | black | | | |
| (18) | --- --- --- -- | floor mats<br>set<br>exclusive<br>see group<br>TEQ/8/07/02 | | 1 | |
| 19 | 986 551 985 00 | fastening plate<br>for<br>floor mats | 04 | 4 | M091 |

| Pos | Part Number | Description | Remark | Qty | Model |
|---|---|---|---|---|---|

| Model | Year | MG | SG | Illustration | Restrictions | UPD | 18:30 | 30.07.2008 | PET |
|---|---|---|---|---|---|---|---|---|---|
| 986 | 2004 | 8 | 07 | 807-03 | | 229 | | | |

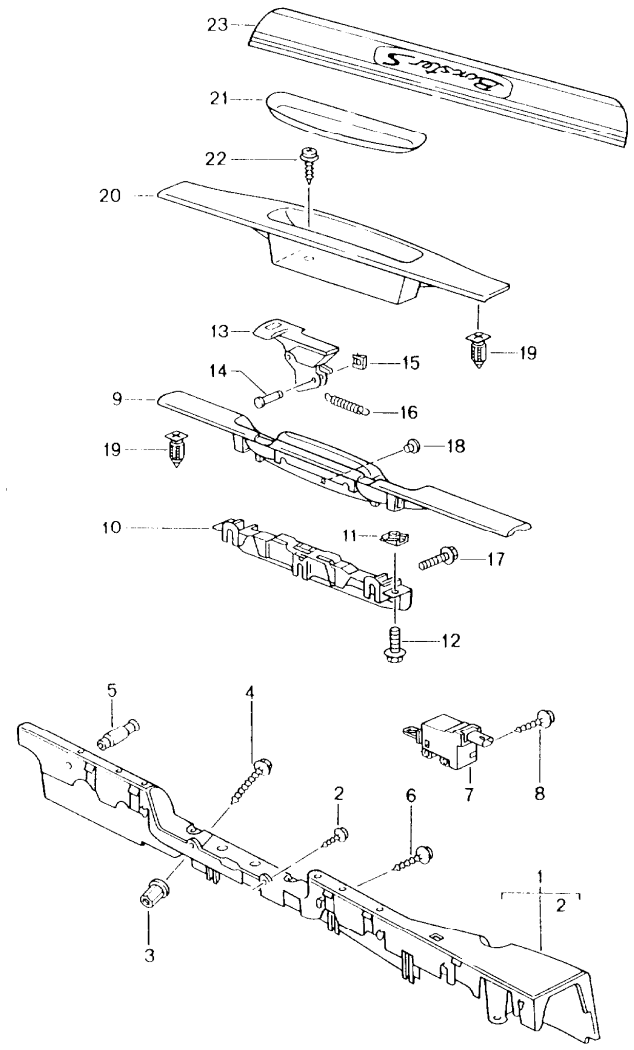


| Pos | Part Number | Description | Remark | Qty | Model |
|---|---|---|---|---|---|
| | | lining<br>door sill | | | |
| 1 | 986 551 619 01 | support | /L | 1 | |
| (1) | 986 551 620 01 | support | /R | 1 | |
| - | 999 551 140 40 | felt strip | | 2 | |
| 2 | 900 143 082 02 | tapping screw<br>6,3 X 13 | | 4 | |
| 3 | 999 500 078 00 | nut<br>M 6 | | 2 | |
| (3) | 999 049 022 40 | plastic nut | | 2 | |
| 4 | 900 378 029 09 | hexagon-head tapping screw<br>M 6 X 40 | | 2 | |
| 5 | 996 551 873 00 | locating peg | | 2 | |
| 6 | 999 919 121 09 | oval-head screw<br>5,0 X 16 | | 2 | |
| 7 | 996 624 115 01 | actuator<br>lid | -00 | 1 | |
| 8 | 999 919 121 09 | oval-head screw<br>5,0 X 16 | -00 | 2 | |
| (9) | 986 551 019 01 | lining<br>with<br>handle<br>black/<br>lining | /LL 97 | 1 | M590 |
| | EDP | black-grey | | | |
| (9) | 986 551 019 01 | lining<br>with<br>handle<br>black/<br>lining | /LL98-99 | 1 | M011/012/016<br>M590 |
| | EDP | black-grey | | | |
| (9) | 986 551 019 02 | lining<br>with<br>handle<br>black/<br>lining | /LL98-99 | 1 | M537 |
| | EDP | black-grey | | | |

| Pos | Part Number | Description | Remark | Qty | Model |
|---|---|---|---|---|---|
| (9) | 986 551 019 03 | lining<br>with<br>handle<br>black/<br>lining | /LL98-99 | 1 | M537/590 |
| | EDP | black-grey | | | |
| (9) | 986 551 019 06 | lining<br>with<br>handle<br>black/<br>lining | /RL 97 | 1 | M590 |
| | EDP | black-grey | | | |
| (9) | 986 551 019 06 | lining<br>with<br>handle<br>black/<br>lining | /RL98-99 | 1 | M011/012/016<br>M590 |
| | EDP | black-grey | | | |
| (9) | 986 551 019 05 | lining<br>with<br>handle<br>black/<br>lining | /RL98-99 | 1 | M538 |
| | EDP | black-grey | | | |
| (9) | 986 551 019 07 | lining<br>with<br>handle<br>black/<br>lining | /RL98-99 | 1 | M538/590 |
| | EDP | black-grey | | | |
| (9) | 996 551 019 01 | lining<br>with<br>handle<br>black<br>lining | /LL 99 | 1 | M010/590 |
| | EDO | granite grey | | | |
| (9) | 996 551 019 02 | lining<br>with<br>handle<br>black<br>lining | /LL 99 | 1 | M 10/537 |
| | EDO | granite grey | | | |
| (9) | 996 551 019 03 | lining<br>with<br>handle<br>black<br>lining | /LL 99 | 1 | M 10/537/590 |
| | EDO | granite grey | | | |
| (9) | 996 551 019 05 | lining<br>with<br>handle<br>black<br>lining | /RL 99 | 1 | M010/538 |
| | EDO | granite grey | | | |
| (9) | 996 551 019 06 | lining<br>with<br>handle<br>black<br>lining | /RL 99 | 1 | M010/590 |
| | EDO | granite grey | | | |
| (9) | 996 551 019 07 | lining<br>with<br>handle<br>black<br>lining | /RL 99 | 1 | M010/538/590 |
| | EDO | granite grey | | | |
| (9) | 996 551 019 10 | lining<br>with<br>handle<br>silver<br>lining | /LL 00 | 1 | M590 |
| | ERF | black | | | |
| (9) | 996 551 019 11 | lining<br>with<br>handle<br>silver<br>lining | /LL 00 | 1 | M537/590 |
| | ERF | black | | | |
| (9) | 996 551 019 14 | lining<br>with<br>handle<br>silver<br>lining | /RL 00 | 1 | M590 |
| | ERF | black | | | |

| Pos | Part Number | Description | Remark | Qty | Model |
|---|---|---|---|---|---|
| (9) | 996 551 019 13 | lining<br>with<br>handle<br>silver<br>lining | /RL 00 | 1 | M538 |
| | ERF | black | | | |
| (9) | 996 551 019 15 | lining<br>with<br>handle<br>silver<br>lining | /RL 00 | 1 | M538/590 |
| | ERF | black | | | |
| 9 | 986 551 119 00 | lining<br>not for | 97<br>98-99 | 1 | M590/<br>M537/538 |
| | B12 | black-grey | | | |
| 9 | 986 551 119 00 | lining<br>not for | 98-99<br>98-99 | 1 | M011/012/016<br>M590/<br>M537/538 |
| | B12 | black-grey | | | |
| 9 | 996 551 119 01 | lining<br>not for | 99-00 | 1 | M590/537/<br>M538 |
| | D05 | granite grey | 99 | | M010 |
| | A03 | black | 00 | | |
| 9 | 996 551 119 04 | lining | 01- | 1 | |
| | A03 | black | | | |
| (9) | 996 551 119 05 | lining | 01- | 1 | M537/538 |
| | A03 | black | | | |
| (9) | 996 551 019 20 | lining<br>complete | /LL 01 | 1 | |
| | A03 | black | | | |
| (9) | 996 551 019 28 | lining<br>complete | /LL 02- | 1 | |
| | A03 | black | | | |
| (9) | 996 551 019 22 | lining<br>complete | /LL 01 | 1 | M537 |
| | A03 | black | | | |
| (9) | 996 551 019 30 | lining<br>complete | /LL 02- | 1 | M537 |
| | A03 | black | | | |
| (9) | 996 551 019 21 | lining<br>complete | /RL 01 | 1 | |
| | A03 | black | | | |
| (9) | 996 551 019 29 | lining<br>complete | /RL 02- | 1 | |
| | A03 | black | | | |
| (9) | 996 551 019 23 | lining<br>complete | /RL 01 | 1 | M538 |
| | A03 | black | | | |
| (9) | 996 551 019 31 | lining<br>complete | /RL 02- | 1 | M538 |
| | A03 | black | | | |
| 10 | 996 551 719 00 | bracket<br>not for | -00<br>98- | 1 | M590/<br>M537/538 |
| 11 | 999 507 556 02 | speed nut<br>M 5<br>not for | -00<br>98- | 2 | M590/<br>M537/538 |
| 12 | 900 075 145 02 | hexagon-head bolt<br>M 5 X 16<br>not for | -00<br>98- | 2 | M590/<br>M537/538 |
| 13 | 996 551 511 01 | handle | /LL/V-99 | 1 | |
| | 70K | gloss black | | | |
| (13) | 996 551 512 01 | handle | /LL/H-99 | 1 | |
| | 70K | gloss black | | | |
| (13) | 996 551 511 02 | handle | /RL/V-99 | 1 | |
| | 70K | gloss black | | | |
| (13) | 996 551 512 02 | handle | /RL/H-99 | 1 | |
| | 70K | gloss black | | | |

| Pos | Part Number | Description | Remark | Qty | Model |
|---|---|---|---|---|---|
| 13 | 996 551 511 01 | handle | /LL/V00 | 1 | M009 |
| | 70K | gloss black | | | |
| (13) | 996 551 512 01 | handle | /LL/H00 | 1 | M009 |
| | 70K | gloss black | | | |
| (13) | 996 551 511 02 | handle | /RL/V00 | 1 | M009 |
| | 70K | gloss black | | | |
| (13) | 996 551 512 02 | handle | /RL/H00 | 1 | M009 |
| | 70K | gloss black | | | |
| 13 | 996 551 511 03 | handle lacquered | /LL/V00 | 1 | M008 |
| | V01 | silver | | | |
| (13) | 996 551 512 03 | handle lacquered | /LL/H00 | 1 | M008 |
| | V01 | silver | | | |
| (13) | 996 551 511 04 | handle lacquered | /RL/V00 | 1 | M008 |
| | V01 | silver | | | |
| (13) | 996 551 512 04 | handle lacquered | /RL/H00 | 1 | M008 |
| | V01 | silver | | | |
| 14 | 999 088 033 02 | bolt<br>not for<br>6 X 22 X 19 | -00<br>98- | 2 | <br>M537/538 |
| 15 | 999 166 079 02 | lock<br>not for | -00<br>98- | 2 | <br>M537/538 |
| 16 | 999 522 030 00 | tension spring<br>not for | -00<br>98- | 2 | <br>M537/538 |
| 17 | 999 218 106 02 | combination screw<br>M 6 X 25 | -00 | 3 | |
| (17) | 999 067 046 09 | pan-head screw<br>M 6 X 20 | 01- | 3 | |
| 18 | 999 703 443 40 | stopper<br>8,0 X 11 X 7,2 | | 3 | |
| | 01C | satin black | | | |
| 19 | 999 507 484 40 | expander nut | | 18 | |
| 20 | 986 551 120 00 | lining | 97 | 1 | |
| | B12 | black-grey | | | |
| 20 | 986 551 120 00 | lining | 98-99 | 1 | M011/012/016 |
| | B12 | black-grey | | | |
| 20 | 996 551 120 00 | lining | | 1 | |
| | D05 | granite grey | 99 | | M010 |
| | A03 | black | 00- | | |
| 21 | 996 551 513 00 | mat | | 1 | |
| 22 | 999 919 164 09 | oval-head screw<br>5,0 X 12 | | 2 | |
| 23 | 986 551 303 00 | scuff plate | 00- | 2 | M008 |
| | A03 | black | | | |
| (23) | 986 551 303 01 | scuff plate lacquered | 04 | 2 | M091 |
| | A03 | black | | | |

| Model | Year | MG | SG | Illustration | Restrictions | UPD | 18:30 | 30.07.2008 | PET |
|---|---|---|---|---|---|---|---|---|---|
| 986 | 2004 | 8 | 07 | 807-05 | | 229 | | | |

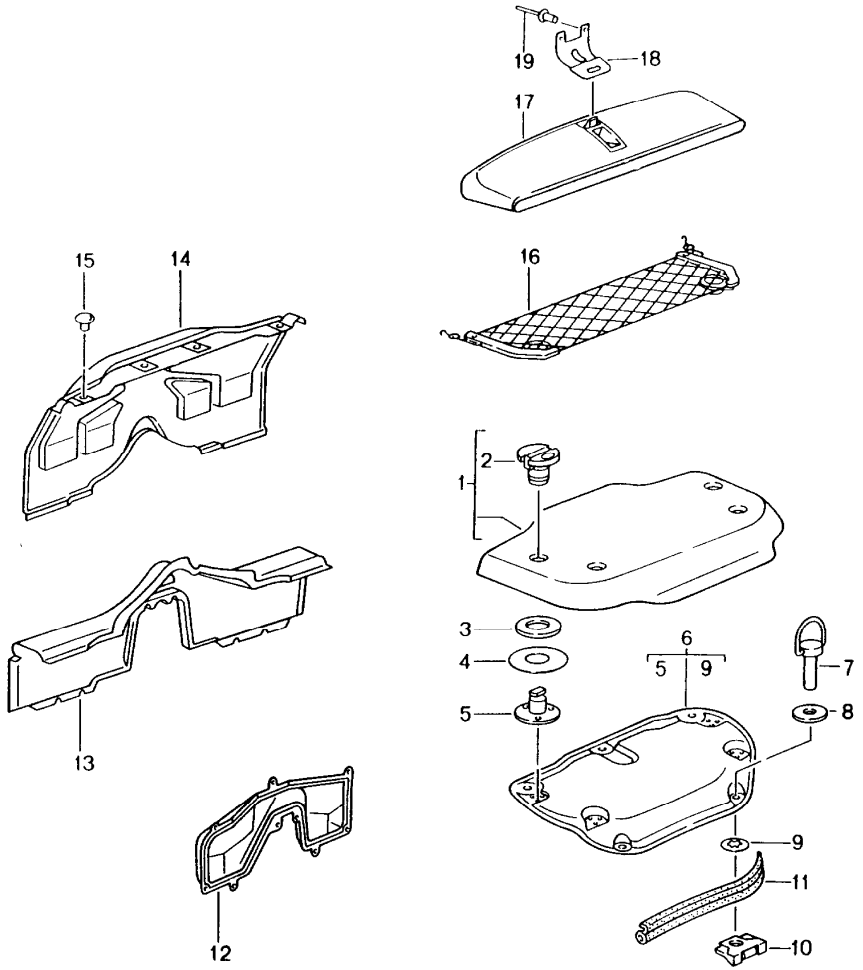


| Pos | Part Number | Description | Remark | Qty | Model |
|---|---|---|---|---|---|
| | | linings<br>engine compartment | | | |
| (1) | 986 551 039 01 | lining | -01 | 1 | |
| | ECC | black | | | |
| | ECO | graphite grey | | | |
| | EEB | savanna | | | |
| | EED | nephrite green | | | |
| | EEO | boxster red | | | |
| | EFL | metropole blue | 98- | | |
| | VRR | dark grey | 00- | | |
| | VRZ | brown/natural | 00- | | |
| | EVV | cinnamon brown | 01- | | |
| (1) | 986 551 039 02 | lining<br>carpet | 02- | 1 | |
| | ECC | black | | | |
| | ECO | graphite grey | | | |
| | EEB | savanna | | | |
| | EED | nephrite green | | | |
| | EEO | boxster red | | | |
| | EFL | metropole blue | 98- | | |
| | VRR | dark grey | 00- | | |
| | VRZ | brown/natural | 00- | | |
| | EVV | cinnamon brown | 01- | | |
| | FKG | cocoa | 04 | | |
| 2 | 986 551 339 00 | catch | | 4 | |
| | 01C | satin black | | | |
| 3 | 986 551 543 00 | thrust washer | | 4 | |
| | 01C | satin black<br>40 X 3 X 24 | | | |
| 4 | 986 551 545 00 | lock washer<br>55 X 1 X 21 | | 4 | |

| Pos | Part Number | Description | Remark | Qty | Model |
|---|---|---|---|---|---|
| 5 | 986 551 547 00 | mounting | | 4 | |
| 6 | 986 513 011 01 | engine cover | | 1 | |
| 7 | 986 513 151 01 | catch | | 5 | |
| 8 | 999 025 264 02 | washer<br>10,5 X 25 X 1,25 | | 5 | |
| 9 | 999 166 087 08 | lock washer<br>9,0 | | 5 | |
| 10 | 986 513 153 01 | nut lock | -03 | 5 | |
| 10 | 999 507 792 09 | nut lock | 04- | 5 | |
| 11 | 986 513 611 00 | gasket | | 1 | |
| 12 | 986 504 181 00 | lid | | 1 | |
| 13 | 986 551 033 00 | lining<br>cross member<br>carpet | | 1 | |
| | A10 | black | | | |
| | C50 | graphite grey | | | |
| | S30 | savanna | | | |
| | J30 | nephrite green | | | |
| | M30 | boxster red | | | |
| | G10 | metropole blue | 98- | | |
| | D11 | dark grey | 00- | | |
| | T11 | brown/natural | 00- | | |
| | P11 | cinnamon brown | 01- | | |
| | R10 | cocoa | 04 | | |
| (14) | 986 551 035 01 | lining<br>rear wall<br>carpet | | 1 | |
| | A10 | black | | | |
| | C50 | graphite grey | | | |
| | S30 | savanna | | | |
| | J30 | nephrite green | | | |
| | M30 | boxster red | | | |

| Pos | Part Number | Description | Remark | Qty | Model |
|---|---|---|---|---|---|
| | G10 | metropole blue | 98- | | |
| | D11 | dark grey | 00- | | |
| | T11 | brown/natural | 00- | | |
| | P11 | cinnamon brown | 01- | | |
| | R10 | cocoa | 04 | | |
| 15 | 999 049 020 40 | plastic nut<br>T5/30 X 5,1 | | 4 | |
| 16 | 986 551 633 01 | luggage net | | 1 | |
| 17 | 986 551 631 00 | storage pocket<br>F >>98WS6 05602 | | 1 | M582 |
| 18 | 986 551 731 00 | support<br>storage pocket<br>F >>98WS6 05602 | | 1 | M582 |
| 19 | 000 043 203 91 | rivet<br>3,2 X 8 | | 2 | M582 |

| Model | Year | MG | SG | Illustration | Restrictions | UPD | 18:30 | 30.07.2008 | PET |
|---|---|---|---|---|---|---|---|---|---|
| 986 | 2004 | 8 | 07 | 807-07 | | 229 | | | |

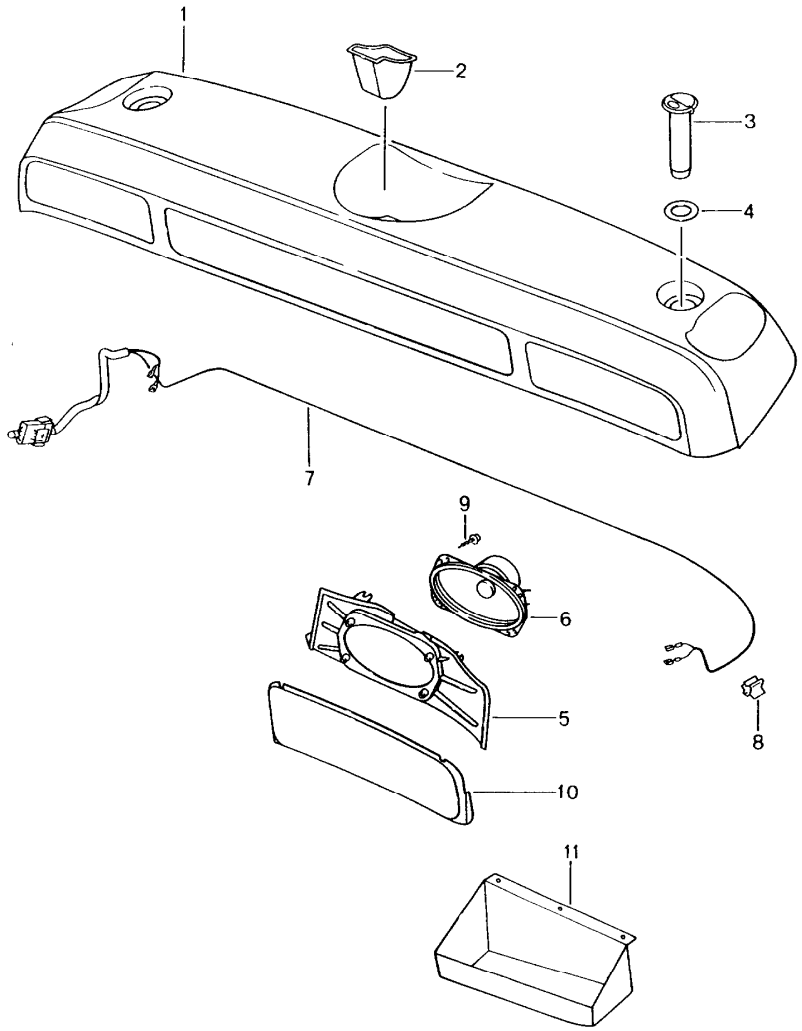


| Pos | Part Number | Description | Remark | Qty | Model |
|---|---|---|---|---|---|
| | | storage box<br>F 98WS6 05603>> | 98- | | M584 |
| 1 | 986 551 223 00 | storage box<br>carpet | -02 | 1 | |
| | EMY | black | | | |
| | EMZ | graphite grey | | | |
| | ENB | savanna | | | |
| | ENC | metropole blue | | | |
| | END | nephrite green | | | |
| | ENE | boxster red | | | |
| | VSC | dark grey | 00- | | |
| | VSD | brown/natural | 00- | | |
| | FDQ | cinnamon brown | 01- | | |
| (1) | 986 551 223 02 | storage box<br>carpet | 03- | 1 | |
| | EMY | black | | | |
| | EMZ | graphite grey | | | |
| | ENB | savanna | | | |
| | ENC | metropole blue | | | |
| | END | nephrite green | -03 | | |
| | ENE | boxster red | | | |
| | VSC | dark grey/natural | | | |
| | VSD | brown/natural | | | |
| | FDQ | cinnamon brown | | | |
| | FKJ | cocoa | 04 | | |
| - | 986 551 511 00 | guide rail | | 2 | |
| | 01C | satin black | | | |
| 2 | 986 551 427 00 | rosette | | 1 | |
| | 01C | satin black | | | |
| 3 | 986 551 429 00 | catch | | 2 | |

| Pos | Part Number | Description | Remark | Qty | Model |
|---|---|---|---|---|---|
| | 01C | satin black | | | |
| 4 | 986 551 543 00 | thrust washer | | 2 | |
| | 01C | satin black | | | |
| 5 | 986 551 431 00 | mounting loudspeaker | /L | 1 | |
| | 01C | satin black | | | |
| (5) | 986 551 432 00 | mounting loudspeaker | /R | 1 | |
| | 01C | satin black | | | |
| 6 | 986 645 503 00 | loudspeaker | | 4 | |
| 7 | 986 612 085 00 | wiring harness | -01 | 1 | |
| 8 | 999 651 286 02 | cable terminal | | 9 | |
| 9 | 999 919 164 09 | screw 50 X 12 | | 24 | |
| 10 | 986 551 433 00 | cover | /L | 1 | |
| | 01C | satin black | | | |
| (10) | 986 551 434 00 | cover | /R | 1 | |
| | 01C | satin black | | | |
| 11 | 986 551 435 00 | tray | /L | 1 | |
| | 01C | satin black | | | |
| (11) | 986 551 436 00 | tray | /R | 1 | |
| | 01C | satin black | | | |

| Pos | Part Number | Description | Remark | Qty | Model |
|---|---|---|---|---|---|

| Model | Year | MG | SG | Illustration | Restrictions | UPD | 18:31 | 30.07.2008 | PET |
|---|---|---|---|---|---|---|---|---|---|
| 986 | 2004 | 8 | 07 | 807-09 | | 229 | | | |

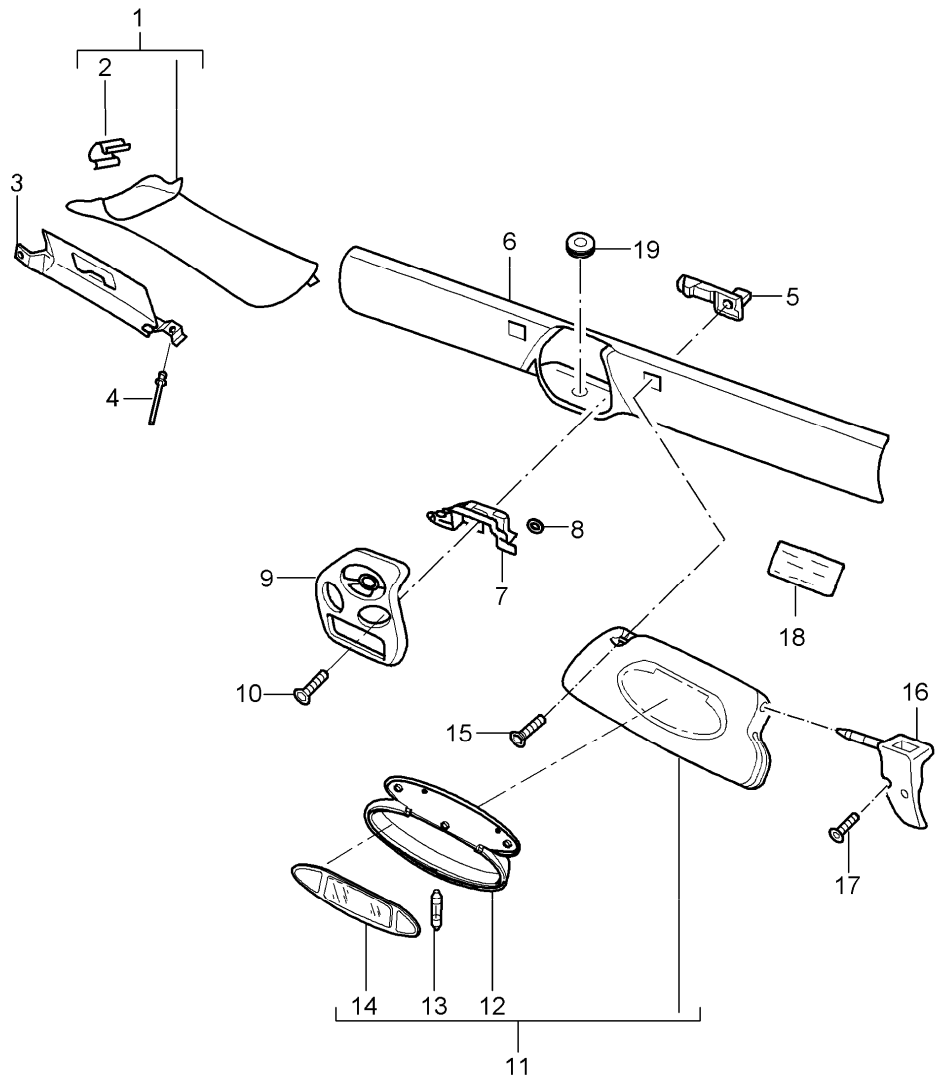


| Pos | Part Number | Description | Remark | Qty | Model |
|---|---|---|---|---|---|
| | | windscreen frame<br>sun visors | | | |
| 1 | 986 555 181 00 | lining<br>a-pillar | /L -97 | 1 | |
| | B12 | black-grey | | | |
| (1) | 986 555 182 00 | lining<br>a-pillar | /R -97 | 1 | |
| | B12 | black-grey | | | |
| (1) | 986 555 181 01 | lining<br>a-pillar | /L 98- | 1 | |
| | B12 | black-grey | | | |
| (1) | 986 555 182 01 | lining<br>a-pillar | /R 98- | 1 | |
| | B12 | black-grey | | | |
| (1) | 986 555 181 01 | lining<br>a-pillar | /L 98-99 | 1 | M012/016 |
| | B12 | black-grey | | | |
| (1) | 986 555 182 01 | lining<br>a-pillar | /R 98-99 | 1 | M012/016 |
| | B12 | black-grey | | | |
| 1 | 986 555 181 02 | lining<br>a-pillar<br>lacquered | /L 98-99 | 1 | M010/011 |
| | D05 | granite grey | | | M010 |
| | 3AW | zenith blue metallic | | | M011 |
| | 25H | ocean jade metallic | | | M011 |
| (1) | 986 555 182 02 | lining<br>a-pillar<br>lacquered | /R 98-99 | 1 | M010/011 |
| | D05 | granite grey | | | M010 |
| | 3AW | zenith blue metallic | | | M011 |
| | 25H | ocean jade metallic | | | M011 |
| (1) | 986 555 181 04 | lining<br>a-pillar<br>lacquered | /L 00- | 1 | |

| Pos | Part Number | Description | Remark | Qty | Model |
|---|---|---|---|---|---|
| | A03 | black | | | |
| (1) | 986 555 182 04 | lining<br>a-pillar<br>lacquered | /R 00- | 1 | |
| | A03 | black | | | |
| 2 | 999 507 584 02 | clamp<br>8 X 10,2/2 | -99 | 4 | |
| (2) | 999 507 681 09 | clamp<br>2,5/3,0 | | 4 | |
| 3 | 986 555 291 00 | deformation element | /L 00- | 1 | |
| (3) | 986 555 292 00 | deformation element | /R 00- | 1 | |
| 4 | 999 190 167 30 | blind rivet<br>4,0 X 6,3 | | 10 | |
| 5 | 986 731 541 00 | plate | -99 | 2 | |
| 5 | 986 731 541 01 | plate | 98-99 | 2 | M274 |
| 5 | 986 731 541 01 | plate | 00- | 2 | |
| 6 | 986 555 059 00 | lining | 97 | 1 | |
| | B12 | black-grey | | | |
| 6 | 986 555 059 00 | lining<br>windscreen frame | 98-99 | 1 | M012/016 |
| | B12 | black-grey | | | |
| 6 | 986 555 059 01 | lining | | 1 | |
| | A03 | black | 00- | | |
| | D05 | granite grey | 99 | | M010 |
| | 3AW | zenith blue metallic | -99 | | M011 |
| | 25H | ocean jade metallic | -99 | | M011 |
| (6) | 986 555 059 03 | lining<br>windscreen frame<br>lacquered | 01- | 1 | M265 |
| | A03 | black | 00- | | |
| 6 | 986 555 059 02 | lining<br>windscreen frame<br>lacquered | | 1 | M011 |
| | 3AW | zenith blue metallic | | | |
| | 25H | ocean jade metallic | | | |
| 7 | 986 613 795 02 | microswitch | -99 | 1 | |
| 7 | 986 613 799 00 | microswitch | 00- | 1 | |
| 8 | 999 507 534 02 | clamping washer<br>2,5 | | 2 | |
| 9 | 986 561 235 02 | mounting | -01 | 1 | M439 |
| | A09 | rally black | | | |
| 9 | 986 561 235 03 | mounting | 02- | 1 | M439 |
| | A09 | rally black | | | |
| 10 | 999 073 166 09 | countersunk-head screw<br>M 6 X 25 | | 2 | |
| (11) | 986 731 031 08 | sun visor | /L -99 | 1 | |
| | EBY | black | | | |
| (11) | 986 731 032 08 | sun visor | /R -99 | 1 | |
| | EBY | black | | | |
| (11) | 986 731 031 09 | sun visor | /L 98-99 | 1 | M274 |
| | EBY | black | | | |
| 11 | 986 731 032 09 | sun visor | /R 98-99 | 1 | M274 |
| | EBY | black | | | |
| (11) | 986 731 031 17 | sun visor | /L -02 | 1 | M274 |
| | A12 | black | | | |
| 11 | 986 731 032 17 | sun visor | /R -02 | 1 | M274 |
| | A12 | black | | | |
| (11) | 986 731 031 23 | sun visor | /L 03- | 1 | M274 |
| | A12 | black | | | |
| 11 | 986 731 032 23 | sun visor | /R 03- | 1 | M274 |
| | A12 | black | | | |
| (11) | 986 731 980 06 | sun visor<br>leather | /L 01- | 1 | XMR/M274 |
| | VRK | black | | | |

| Pos | Part Number | Description | Remark | Qty | Model |
|---|---|---|---|---|---|
| | C51 | graphite grey | | | |
| | S31 | savanna | | | |
| | J31 | nephrite green | | | |
| | M31 | boxster red | | | |
| | G11 | metropole blue | | | |
| | D12 | dark grey | | | |
| | T12 | brown/natural | | | |
| | P12 | cinnamon brown | | | |
| 11 | 986 731 981 06 | sun visor<br>leather | /R 01- | 1 | XMR/M274 |
| | VRK | black | | | |
| | C51 | graphite grey | | | |
| | S31 | savanna | | | |
| | J31 | nephrite green | | | |
| | M31 | boxster red | | | |
| | G11 | metropole blue | | | |
| | D12 | dark grey | | | |
| | T12 | brown/natural | | | |
| | P12 | cinnamon brown | | | |
| (12) | 986 731 901 00 | mirror housing<br>without<br>illumination | -99 | 2 | |
| | 01C | satin black | | | |
| 12 | 996 731 903 00 | mirror housing<br>with<br>illumination | | 1 | |
| | 01C | satin black | | | |
| 13 | 999 631 137 90 | bulb | -01 | 4 | M274 |
| 13 | 999 631 147 90 | bulb<br>3 W | 02- | 4 | M274 |
| 14 | 996 731 531 01 | mirror glass<br>with<br>frame | | 2 | M274 |

| Pos | Part Number | Description | Remark | Qty | Model |
|---|---|---|---|---|---|
| | 01C | satin black | | | |
| 15 | 999 919 120 09 | oval-head screw<br>4,0 x 18 | | 2 | |
| (16) | 986 561 307 00 | mounting | /L | 1 | |
| | A09 | black | | | |
| 16 | 986 561 308 00 | mounting | /R | 1 | |
| | A09 | black | | | |
| 17 | 999 073 166 09 | countersunk-head screw<br>M 6 X 25 | | 4 | |
| 18 | 986 701 401 06 | sticker<br>convertible top control<br>german | -03 | 1 | M488 |
| 18 | 986 701 401 12 | sticker<br>convertible top control<br>german | 04- | 1 | M488 |
| 18 | 986 701 401 07 | sticker | -03 | 1 | M130 |
| 18 | 986 701 401 13 | sticker<br>convertible top control<br>english | 04- | 1 | M130 |
| 19 | 996 555 619 00 | grommet<br>wiring harness<br>rain sensor | 01- | 1 | M265 |
| 20 | - - - - | sensor<br>interior monitoring<br>see illustrations<br>09/01/03 | | 1 | |
| 21 | - - - - | trim cover<br>alarm siren<br>see illustrations<br>09/01/03 | | 1 | |
| 22 | - - - - | interior light<br>see illustrations<br>09/03/04 | | 1 | |

| Model | Year | MG | SG | Illustration | Restrictions | UPD | 18:31 | 30.07.2008 | PET |
|---|---|---|---|---|---|---|---|---|---|
| 986 | 2004 | 8 | 07 | 807-10 | | 229 | | | |

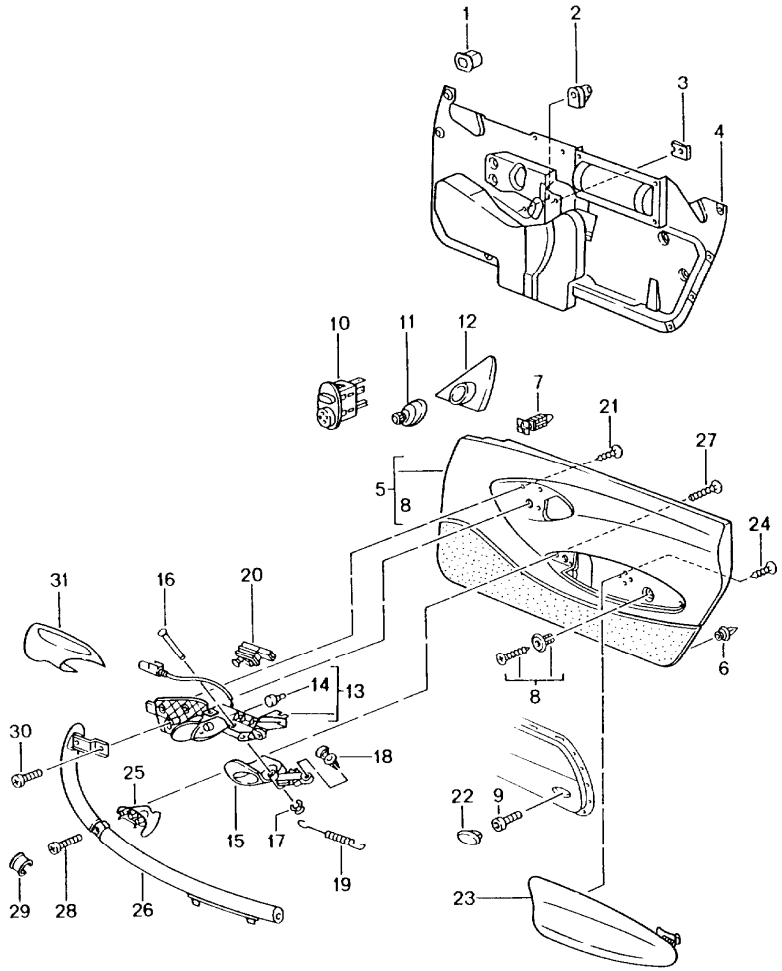


| Pos | Part Number | Description | Remark | Qty | Model |
|---|---|---|---|---|---|
| | | door trim panel<br>accessories | | | |
| 1 | 191 853 615 A | grommet | | 3 | |
| 2 | 999 920 013 40 | plug-in nut<br>5,0 X 1,0 X 8 | | 4 | |
| (2) | A 999 507 462 02 | speed nut | -02 | 1 | |
| (2) | 999 591 499 02 | speed nut<br>4,8 | 03- | 1 | |
| 3 | 999 591 882 02 | speed nut<br>M 6 | | 2 | |
| (4) | 996 555 831 04 | seal | /L | 1 | |
| 4 | 996 555 832 04 | seal | /R | 1 | |
| (4) | 996 555 831 05 | seal | /L | 1 | M490/680 |
| (4) | 996 555 832 05 | seal | /R | 1 | M490/680 |
| | | repair material<br>use also: | | | |
| - | 000 043 101 00 | sealing cord | | 1 | |
| 5 | --- --- --- -- | door trim panel | | X | |
| >> | >>--- --- --- -- | door trim panel | | X | |
| >> | >>--- --- --- -- | leatherette | | X | |
| >> | >>--- --- --- -- | without | | X | |
| >> | >>--- --- --- -- | sound system | | X | |
| (5) | A 986 555 121 00 | door trim panel<br>leatherette | /L 97 | 1 | |
| | EAB | black | | | |
| | EAD | graphite grey | | | |
| | EAH | savanna | | | |
| 5 | A 986 555 122 00 | door trim panel<br>leatherette | /R 97 | 1 | |
| | EAB | black | | | |
| | EAD | graphite grey | | | |
| | EAH | savanna | | | |

| Pos | Part Number | Description | Remark | Qty | Model |
|---|---|---|---|---|---|
| (5) | 986 555 121 13 | door trim panel leatherette | /L -99 | 1 | M010/011/016 |
| | DHB | black | | | |
| | DHC | graphite grey | | | |
| | DHD | savanna | | | |
| | DFE | metropole blue | | | |
| 5 | 986 555 122 13 | door trim panel leatherette | /R -99 | 1 | M010/011/016 |
| | DHB | black | | | |
| | DHC | graphite grey | | | |
| | DHD | savanna | | | |
| | DFE | metropole blue | | | |
| (5) | 986 555 121 01 | door trim panel leatherette | /L 98-99 | 1 | M012 |
| | ELN | black | | | |
| 5 | 986 555 122 01 | door trim panel leatherette | /R 98-99 | 1 | M012 |
| | ELN | black | | | |
| (5) | 986 555 121 06 | door trim panel leatherette | /L 98-99 | 1 | M011/016/563 |
| | ELV | black | | | |
| | ELW | graphite grey | | | |
| | ELX | savanna | | | |
| | ELY | metropole blue | | | |
| (5) | 986 555 121 06 | door trim panel leatherette | 99 | 1 | M011/016/563 |
| | ELV | black | | | |
| | ELW | graphite grey | | | |
| | ELX | savanna | | | |
| | ELY | metropole blue | | | |
| (5) | 986 555 122 06 | door trim panel leatherette | /R 98-99 | 1 | M011/016/563 |

| Pos | Part Number | Description | Remark | Qty | Model |
|---|---|---|---|---|---|
| | ELV | black | | | |
| | ELW | graphite grey | | | |
| | ELX | savanna | | | |
| | ELY | metropole blue | | | |
| (5) | 986 555 122 06 | door trim panel leatherette | /R 99 | 1 | M010/563 |
| | ELV | black | | | |
| | ELW | graphite grey | | | |
| | ELX | savanna | | | |
| | ELY | metropole blue | | | |
| (5) | 986 555 121 10 | door trim panel leatherette | /L 98-99 | 1 | M012/563 |
| | ELR | black | | | |
| (5) | 986 555 122 10 | door trim panel leatherette | /R 98-99 | 1 | M012/563 |
| | ELR | black | | | |
| (5) | 986 555 121 06 | door trim panel leatherette | /L 00- | 1 | M0016/563 |
| | ESU | black | | | |
| | ESV | graphite grey | | | |
| | ESW | savanna | | | |
| | ESX | metropole blue | | | |
| | FET | nephrite green | 01- | | |
| (5) | 986 555 122 06 | door trim panel leatherette | /R 00- | 1 | M016/563 |
| | ESU | black | | | |
| | ESV | graphite grey | | | |
| | ESW | savanna | | | |
| | ESX | metropole blue | | | |
| | FET | nephrite green | 01- | | |
| (5) | 986 555 121 10 | door trim panel leatherette | /L 00- | 1 | M012/563 |

| Pos | Part Number | Description | Remark | Qty | Model |
|---|---|---|---|---|---|
| | ETM | black | | | |
| (5) | 986 555 122 10 | door trim panel leatherette | /R 00- | 1 | M012/563 |
| | ETM | black | | | |
| >> | >>--- --- --- -- | door trim panel | | X | |
| >> | >>--- --- --- -- | leatherette | | X | |
| >> | >>--- --- --- -- | with | | X | |
| >> | >>--- --- --- -- | sound system | | X | |
| (5) | 986 555 121 02 | door trim panel leatherette | /L 97 | 1 | M490 |
| | EBZ | black | | | |
| | ECA | graphite grey | | | |
| | ECB | savanna | | | |
| (5) | 986 555 122 02 | door trim panel leatherette | /R 97 | 1 | M490 |
| | EBZ | black | | | |
| | ECA | graphite grey | | | |
| | ECB | savanna | | | |
| (5) | 986 555 121 14 | door trim panel leatherette | /L 98-99 | 1 | M011/016/490 |
| | DHH | black | | | |
| | DHJ | graphite grey | | | |
| | DHK | savanna | | | |
| | EEH | metropole blue | | | |
| (5) | 986 555 121 14 | door trim panel leatherette | /L 99 | 1 | M010/490 |
| | DHH | black | | | |
| | DHJ | graphite grey | | | |
| | DHK | savanna | | | |
| | EEH | metropole blue | | | |
| (5) | 986 555 122 14 | door trim panel leatherette | /R 98-99 | 1 | M011/016/490 |

| Pos | Part Number | Description | Remark | Qty | Model |
|---|---|---|---|---|---|
| | DHH | black | | | |
| | DHJ | graphite grey | | | |
| | DHK | savanna | | | |
| | EEH | metropole blue | | | |
| (5) | 986 555 122 14 | door trim panel leatherette | /R 99 | 1 | M010/490 |
| | DHH | black | | | |
| | DHJ | graphite grey | | | |
| | DHK | savanna | | | |
| | EEH | metropole blue | | | |
| (5) | 986 555 121 05 | door trim panel leatherette | /L 98-99 | 1 | M012/490 |
| | ELZ | black | | | |
| (5) | 986 555 122 05 | door trim panel leatherette | /R 98-99 | 1 | M012/490 |
| | ELZ | black | | | |
| (5) | 986 555 121 07 | door trim panel | /L 98-99 | 1 | M011/016/490 M563 |
| | | leatherette | 99 | | M010/490/563 |
| | DGC | black | | | |
| | DGD | graphite grey | | | |
| | DGE | savanna | | | |
| | DGF | metropole blue | | | |
| (5) | 986 555 122 07 | door trim panel | /R 98-99 | 1 | M011/016/490 M563 |
| | | leatherette | 99 | | M010/490/563 |
| | DGC | black | | | |
| | DGD | graphite grey | | | |
| | DGE | savanna | | | |
| | DGF | metropole blue | | | |
| (5) | 986 555 121 11 | door trim panel leatherette | /L 98-99 | 1 | M012/490/563 |

| Pos | Part Number | Description | Remark | Qty | Model |
|---|---|---|---|---|---|
| | EMA | black | | | |
| (5) | 986 555 122 11 | door trim panel leatherette | /R 98-99 | 1 | M012/490/563 |
| | EMA | black | | | |
| (5) | 986 555 121 17 | door trim panel leatherette | /L 00- | 1 | M016/490/563 |
| | ESY | black | | | |
| | ESZ | graphite grey | | | |
| | ETA | savanna | | | |
| | ETB | metropole blue | | | |
| | FEV | nephrite green | 01- | | |
| (5) | 986 555 121 17 | door trim panel leatherette | /L 02- | 1 | M016/680/563 |
| | ESY | black | | | |
| | ESZ | graphite grey | | | |
| | ETA | savanna | | | |
| | ETB | metropole blue | | | |
| | FEV | nephrite green | 01- | | |
| (5) | 986 555 122 17 | door trim panel leatherette | /R 00- | 1 | M016/490/563 |
| | ESY | black | | | |
| | ESZ | graphite grey | | | |
| | ETA | savanna | | | |
| | ETB | metropole blue | | | |
| | FEV | nephrite green | 01- | | |
| (5) | 986 555 122 17 | door trim panel leatherette | /R 02- | 1 | M016/680/563 |
| | ESY | black | | | |
| | ESZ | graphite grey | | | |
| | ETA | savanna | | | |
| | ETB | metropole blue | | | |

| Pos | Part Number | Description | Remark | Qty | Model |
|---|---|---|---|---|---|
| | FEV | nephrite green | 01- | | |
| (5) | 986 555 121 20 | door trim panel leatherette | /L 00- | 1 | M012/490/563 |
| | ETK | black | | | |
| (5) | 986 555 121 20 | door trim panel leatherette | /L 02- | 1 | M012/680/563 |
| | ETK | black | | | |
| (5) | 986 555 122 20 | door trim panel leatherette | /R 00- | 1 | M012/490/563 |
| | ETK | black | | | |
| (5) | 986 555 122 20 | door trim panel leatherette | /R 02- | 1 | M012/680/563 |
| | ETK | black | | | |
| >> | >>--- --- --- -- | door trim panel | | X | |
| >> | >>--- --- --- -- | leather | | X | |
| >> | >>--- --- --- -- | without | | X | |
| >> | >>--- --- --- -- | sound system | | X | |
| (5) | 986 555 121 03 | door trim panel leather | /L 97 | 1 | |
| | ECJ | black | | | |
| | ECK | graphite grey | | | |
| | ECL | savanna | | | |
| | ECM | nephrite green | | | |
| | ECN | boxster red | | | |
| 5 | 986 555 122 03 | door trim panel leather | /R 97 | 1 | |
| | ECJ | black | | | |
| | ECK | graphite grey | | | |
| | ECL | savanna | | | |
| | ECM | nephrite green | | | |
| | ECN | boxster red | | | |

| Pos | Part Number | Description | Remark | Qty | Model |
|---|---|---|---|---|---|
| (5) | 986 555 121 03 | door trim panel leather | /L 98-99 | 1 | M010/016 |
| | ECJ | black | | | |
| | ECK | graphite grey | | | |
| | ECL | savanna | | | |
| | ECM | nephrite green | | | |
| | ECN | boxster red | | | |
| | DFX | metropole blue | 98- | | |
| 5 | 986 555 122 03 | door trim panel leather | /R 98-99 | 1 | M010/016 |
| | ECJ | black | | | |
| | ECK | graphite grey | | | |
| | ECL | savanna | | | |
| | ECM | nephrite green | | | |
| | ECN | boxster red | | | |
| | DFX | metropole blue | 98- | | |
| (5) | 986 555 121 08 | door trim panel leather | /L 98-99 | 1 | M016/563 |
| | ECJ | black | | | |
| | ECK | graphite grey | | | |
| | ECL | savanna | | | |
| | DFX | metropole blue | | | |
| | ECM | nephrite green | | | |
| | ECN | boxster red | | | |
| (5) | 986 555 121 08 | door trim panel leather | /L 99 | 1 | M010/563 |
| | ECJ | black | | | |
| | ECK | graphite grey | | | |
| | ECL | savanna | | | |
| | DFX | metropole blue | | | |
| | ECM | nephrite green | | | |
| | ECN | boxster red | | | |
| | VSG | dark grey | | | |
| | VSH | brown/natural | | | |
| | FEU | cinnamon brown | 01- | | |
| (5) | 986 555 122 08 | door trim panel leather | /R -02 | 1 | M016/563/981 |
| | ETL | black | | | |
| | ECK | graphite grey | | | |
| | ECL | savanna | | | |
| | DFX | metropole blue | | | |
| | ECM | nephrite green | | | |
| | ECN | boxster red | | | |
| (5) | 986 555 122 08 | door trim panel leather | /R 98-99 | 1 | M016/563 |
| | ECJ | black | | | |
| | ECK | graphite grey | | | |
| | ECL | savanna | | | |
| | ECM | nephrite green | | | |
| | ECN | boxster red | | | |
| | DFX | metropole blue | | | |
| | ECM | nephrite green | | | |
| | ECN | boxster red | | | |
| (5) | 986 555 122 08 | door trim panel leather | 99 | 1 | M010/563 |
| | ECJ | black | | | |
| | ECK | graphite grey | | | |
| | ECL | savanna | | | |
| | DFX | metropole blue | | | |
| | ECM | nephrite green | | | |
| | ECN | boxster red | | | |
| (5) | 986 555 121 08 | door trim panel leather | /L -02 | 1 | M016/563/981 |
| | ETL | black | | | |
| | ECK | graphite grey | | | |
| | ECL | savanna | | | |
| | DFX | metropole blue | | | |
| | ECM | nephrite green | | | |
| | ECN | boxster red | | | |
| | VSG | dark grey | | | |
| | VSH | brown/natural | | | |
| | FEU | cinnamon brown | 01- | | |
| (5) | 986 555 122 08 | door trim panel leather | /R -02 | 1 | M016/563/981 |
| | ETL | black | | | |

| Pos | Part Number | Description | Remark | Qty | Model |
|---|---|---|---|---|---|
| | ECK | graphite grey | | | |
| | ECL | savanna | | | |
| | DFX | metropole blue | | | |
| | ECM | nephrite green | | | |
| | ECN | boxster red | | | |
| | VSG | dark grey | | | |
| | VSH | brown/natural | | | |
| | FEU | cinnamon brown | 01- | | |
| >> | >>--- --- --- -- | door trim panel | | X | |
| >> | >>--- --- --- -- | leather | | X | |
| >> | >>--- --- --- -- | with | | X | |
| >> | >>--- --- --- -- | sound system | | X | |
| (5) | 986 555 121 21 | door trim panel<br>airbag<br>leather | /L 03- | 1 | M016/563/981 |
| | ETL | black | | | |
| | ECK | graphite grey | | | |
| | ECL | savanna | | | |
| | DFX | metropole blue | | | |
| | ECM | nephrite green | -03 | | |
| | ECN | boxster red | | | |
| | FEU | cinnamon brown | | | |
| | VSG | dark grey/natural | | | |
| | VSH | brown/natural | | | |
| (5) | 986 555 122 21 | door trim panel<br>airbag<br>leather | /R 03- | 1 | M016/563/981 |
| | ETL | black | | | |
| | ECK | graphite grey | | | |
| | ECL | savanna | | | |
| | DFX | metropole blue | | | |

| Pos | Part Number | Description | Remark | Qty | Model |
|---|---|---|---|---|---|
| | ECM | nephrite green | -03 | | |
| | ECN | boxster red | | | |
| | FEU | cinnamon brown | | | |
| | VSG | dark grey/natural | | | |
| | VSH | brown/natural | | | |
| (5) | 986 555 121 04 | door trim panel<br>leather | /L 97 | 1 | M490 |
| | ECP | black | | | |
| | ECQ | graphite grey | | | |
| | ECR | savanna | | | |
| | ECS | nephrite green | | | |
| | ECT | boxster red | | | |
| (5) | 986 555 122 04 | door trim panel<br>leather | /R 97 | 1 | M490 |
| | ECP | black | | | |
| | ECQ | graphite grey | | | |
| | ECR | savanna | | | |
| | ECS | nephrite green | | | |
| | ECT | boxster red | | | |
| (5) | 986 555 121 04 | door trim panel<br>leather | /L 98-99 | 1 | M010/016/490 |
| | ECP | black | | | |
| | ECQ | graphite grey | | | |
| | ECR | savanna | | | |
| | ECS | nephrite green | | | |
| | ECT | boxster red | | | |
| | DGB | metropole blue | 98- | | |
| (5) | 986 555 122 04 | door trim panel<br>leather | /R 98-99 | 1 | M010/016/490 |
| | ECP | black | | | |
| | ECQ | graphite grey | | | |

| Pos | Part Number | Description | Remark | Qty | Model |
|---|---|---|---|---|---|
| | ECR | savanna | | | |
| | ECS | nephrite green | | | |
| | ECT | boxster red | | | |
| | DGB | metropole blue | 98- | | |
| (5) | 986 555 121 09 | door trim panel leather | /L 98-99 | 1 | M016/490/563 |
| | ECP | black | | | |
| | ECQ | graphite grey | | | |
| | ECR | savanna | | | |
| | DGB | metropole blue | | | |
| | ECS | nephrite green | | | |
| | ECT | boxster red | | | |
| (5) | 986 555 121 09 | door trim panel leather | /L 99 | 1 | M010/490/563 |
| | ECP | black | | | |
| | ECQ | graphite grey | | | |
| | ECR | savanna | | | |
| | DGB | metropole blue | | | |
| | ECS | nephrite green | | | |
| | ECT | boxster red | | | |
| (5) | 986 555 122 09 | door trim panel leather | /R 98-99 | 1 | M016/490/563 |
| | ECP | black | | | |
| | ECQ | graphite grey | | | |
| | ECR | savanna | | | |
| | DGB | metropole blue | | | |
| | ECS | nephrite green | | | |
| | ECT | boxster red | | | |
| (5) | 986 555 122 09 | door trim panel leather | /R 99 | 1 | M010/490/563 |
| | ECP | black | | | |
| | ECQ | graphite grey | | | |
| | ECR | savanna | | | |
| | DGB | metropole blue | | | |
| | ECS | nephrite green | | | |
| | ECT | boxster red | | | |
| | VSJ | dark grey | | | |
| | VSK | brown/natural | | | |
| | FEW | cinnamon brown | 01- | | |
| (5) | 986 555 121 18 | door trim panel leather | /L 00-01 | 1 | M016/490/563 |
| | ETC | black | | | |
| | ETD | graphite grey | | | |
| | ETE | savanna | | | |
| | ETF | metropole blue | | | |
| | ETG | nephrite green | | | |
| | ETH | boxster red | | | |
| | VSJ | dark grey | | | |
| | VSK | brown/natural | | | |
| | FEW | cinnamon brown | 01- | | |
| (5) | 986 555 121 18 | door trim panel leather | /L 01-02 | 1 | M016/680/563 |
| | ETC | black | | | |
| | ETD | graphite grey | | | |
| | ETE | savanna | | | |
| | ETF | metropole blue | | | |
| | ETG | nephrite green | | | |
| | ETH | boxster red | | | |
| | VSJ | dark grey | | | |
| | VSK | brown/natural | | | |
| | FEW | cinnamon brown | 01- | | |
| (5) | 986 555 122 18 | door trim panel leather | /R 00-01 | 1 | M016/490/563 |
| | ETC | black | | | |

| Pos | Part Number | Description | Remark | Qty | Model |
|---|---|---|---|---|---|
| | ETD | graphite grey | | | |
| | ETE | savanna | | | |
| | ETF | metropole blue | | | |
| | ETG | nephrite green | | | |
| | ETH | boxster red | | | |
| | VSJ | dark grey | | | |
| | VSK | brown/natural | | | |
| | FEW | cinnamon brown | 01- | | |
| (5) | 986 555 122 18 | door trim panel leather | /R 01-02 | 1 | M016/680/563 |
| | ETC | black | | | |
| | ETD | graphite grey | | | |
| | ETE | savanna | | | |
| | ETF | metropole blue | | | |
| | ETG | nephrite green | | | |
| | ETH | boxster red | | | |
| | VSJ | dark grey | | | |
| | VSK | brown/natural | | | |
| | FEW | cinnamon brown | 01- | | |
| (5) | 986 555 121 22 | door trim panel leather | /L 03- | 1 | M016/490/563 |
| | ETC | black | | | |
| | ETD | graphite grey | | | |
| | ETE | savanna | | | |
| | ETF | metropole blue | | | |
| | ETG | nephrite green | -03 | | |
| | ETH | boxster red | | | |
| | FEW | cinnamon brown | | | |
| | VSJ | dark grey/natural | | | |
| | VSK | brown/natural | | | |

| Pos | Part Number | Description | Remark | Qty | Model |
|---|---|---|---|---|---|
| (5) | 986 555 121 22 | door trim panel leather | /L 03- | 1 | M016/680/563 |
| | ETC | black | | | |
| | ETD | graphite grey | | | |
| | ETE | savanna | | | |
| | ETF | metropole blue | | | |
| | ETG | nephrite green | -03 | | |
| | ETH | boxster red | | | |
| | FEW | cinnamon brown | | | |
| | VSJ | dark grey/natural | | | |
| | VSK | brown/natural | | | |
| (5) | 986 555 122 22 | door trim panel leather | /R 03- | 1 | M016/490/563 |
| | ETC | black | | | |
| | ETD | graphite grey | | | |
| | ETE | savanna | | | |
| | ETF | metropole blue | | | |
| | ETG | nephrite green | -03 | | |
| | ETH | boxster red | | | |
| | FEW | cinnamon brown | | | |
| | VSJ | dark grey/natural | | | |
| | VSK | brown/natural | | | |
| (5) | 986 555 122 22 | door trim panel leather | /R 03- | 1 | M016/680/563 |
| | ETC | black | | | |
| | ETD | graphite grey | | | |
| | ETE | savanna | | | |
| | ETF | metropole blue | | | |
| | ETG | nephrite green | -03 | | |
| | ETH | boxster red | | | |

| Pos | Part Number | Description | Remark | Qty | Model |
|---|---|---|---|---|---|
| | FEW | cinnamon brown | | | |
| | VSJ | dark grey/natural | | | |
| | VSK | brown/natural | | | |
| (5) | 986 555 121 22 | door trim panel<br>leather | /L 04 | 1 | M091/490/563 |
| | FKR | cocoa | | | |
| | VSJ | dark grey/natural | | | |
| (5) | 986 555 121 22 | door trim panel<br>leather | /L 04 | 1 | M091/563/680 |
| | FKR | cocoa | | | |
| | VSJ | dark grey/natural | | | |
| (5) | 986 555 122 22 | door trim panel<br>leather | /R 04 | 1 | M091/490/563 |
| | FKR | cocoa | | | |
| | VSJ | dark grey/natural | | | |
| (5) | 986 555 122 22 | door trim panel<br>leather | /R 04 | 1 | M091/563/680 |
| | FKR | cocoa | | | |
| | VSJ | dark grey/natural | | | |
| - | 999 911 688 40 | adhesive tape<br>10 X 0,1 X 370 | | 4 | |
| 6 | 999 507 505 40 | clip<br>grey | | 8 | |
| 6 | 999 507 582 40 | clip<br>white<br>8,0 X 0,9 | | 8 | |
| 7 | 999 507 651 40 | expander nut<br>9,0 X 0,9 | | 2 | |
| 8 | 999 507 427 40 | expander nut<br>6,3 | -04 | 2 | |
| 9 | 999 067 043 02 | pan-head screw<br>5 X 10 | | 2 | |
| 10 | 996 613 241 00 | switch<br>door mirror<br>electrically adjustable | | 1 | |

| Pos | Part Number | Description | Remark | Qty | Model |
|---|---|---|---|---|---|
| | EAL | gloss black | | | |
| (11) | 986 555 751 00 | knob<br>door mirror<br>manually adjustable | /L 97 | 1 | |
| | 01C | satin black | | | |
| 11 | 986 555 752 00 | knob<br>door mirror<br>manually adjustable | /R 97 | 1 | |
| | 01C | satin black | | | |
| (12) | 986 555 651 00 | lining<br>door mirror<br>manually adjustable | /L 97 | 1 | |
| | B12 | black-grey | | | |
| 12 | 986 555 652 00 | lining<br>door mirror<br>manually adjustable | /R 97 | 1 | |
| | B12 | black-grey | | | |
| (12) | 996 555 651 00 | lining<br>door mirror<br>electrically adjustable | /LL/L 97 | 1 | |
| | B12 | black-grey | | | |
| (12) | 996 555 652 00 | lining<br>door mirror<br>electrically adjustable | /RL/R 97 | 1 | |
| | B12 | black-grey | | | |
| (12) | 996 555 651 00 | lining<br>door mirror<br>electrically adjustable | /LL/L-99 | 1 | M012/016 |
| | B12 | black-grey | | | |
| (12) | 996 555 652 00 | lining<br>door mirror<br>electrically adjustable | /RL/R-99 | 1 | M012/016 |
| | B12 | black-grey | | | |
| (12) | 996 555 651 01 | lining | /RL/L97 | 1 | |
| | B12 | black-grey | | | |
| (12) | 996 555 652 01 | lining | /LL/R97 | 1 | |
| | B12 | black-grey | | | |

| Pos | Part Number | Description | Remark | Qty | Model |
|---|---|---|---|---|---|
| (12) | 996 555 651 01 | lining | /RL/L-99 | 1 | M011 |
| | B12 | black-grey | | | |
| (12) | 996 555 652 01 | lining<br>door mirror<br>electrically adjustable | /LL/R-99 | 1 | M011 |
| | B12 | black-grey | | | |
| (12) | 996 555 651 03 | lining<br>door mirror<br>electrically adjustable | /LL/L99- | 1 | |
| | D05 | granite grey | 99 | | M010 |
| | A03 | black | 00- | | |
| (12) | 996 555 652 02 | lining<br>door mirror<br>electrically adjustable | /LL/R99- | 1 | |
| | D05 | granite grey | 99 | | M010 |
| | A03 | black | 00- | | |
| (12) | 996 555 651 02 | lining<br>door mirror<br>electrically adjustable | /RL/L99- | 1 | |
| | D05 | granite grey | 99 | | M010 |
| | A03 | black | 00- | | |
| (12) | 996 555 652 03 | lining<br>door mirror<br>electrically adjustable | /RL/R99- | 1 | |
| | D05 | granite grey | 99 | | M010 |
| | A03 | black | 00- | | |
| (12) | 996 555 983 00 | lining | /LL/L01- | 1 | XTC/XTE/XTK/XTR |
| | | leather | | | |
| | A11 | black | | | |
| | C51 | graphite grey | | | |
| | S31 | savanna | | | |
| | G11 | metropole blue | | | |
| | J31 | nephrite green | | | |
| | M31 | boxster red | | | |
| | T12 | brown/natural | 00- | | |
| | D12 | dark grey/natural | 00- | | |
| | P12 | cinnamon brown | 01- | | |
| (12) | 996 555 984 01 | lining | /LL/R01- | 1 | XTC/XTE/XTK/XTR |
| | | leather | | | |
| | A11 | black | | | |
| | C51 | graphite grey | | | |
| | S31 | savanna | | | |
| | G11 | metropole blue | | | |
| | J31 | nephrite green | | | |
| | M31 | boxster red | | | |
| | T12 | brown/natural | 00- | | |
| | D12 | dark grey/natural | 00- | | |
| | P12 | cinnamon brown | 01- | | |
| (12) | 996 555 983 01 | lining | /RL/L01- | 1 | XTC/XTE/XTK/XTR |
| | | leather | | | |
| | A11 | black | | | |
| | C51 | graphite grey | | | |
| | S31 | savanna | | | |
| | G11 | metropole blue | | | |
| | J31 | nephrite green | | | |
| | M31 | boxster red | | | |
| | T12 | brown/natural | 00- | | |
| | D12 | dark grey/natural | 00- | | |
| | P12 | cinnamon brown | 01- | | |
| (12) | 996 555 984 00 | lining | /RL/R01- | 1 | XTC/XTE/XTK/XTR |
| | | leather | | | |
| | A11 | black | | | |
| | C51 | graphite grey | | | |

| Pos | Part Number | Description | Remark | Qty | Model |
|---|---|---|---|---|---|
| | S31 | savanna | | | |
| | G11 | metropole blue | | | |
| | J31 | nephrite green | | | |
| | M31 | boxster red | | | |
| | T12 | brown/natural | 00- | | |
| | D12 | dark grey/natural | 00- | | |
| | P12 | cinnamon brown | 01- | | |
| (13) | 986 555 371 02 | inner door release<br>complete<br>with<br>handle | /L -99 | 1 | |
| | EBC | gloss black | | | |
| (13) | 986 555 372 02 | inner door release<br>order also:<br>996.537.320.03<br>complete<br>with<br>handle<br>F >>98XS6 00819<br>F >>98XU6 22717 | /R -99 | 1<br>1 | |
| | EBC | gloss black | | | |
| (13) | A 986 555 371 03 | inner door release<br>complete<br>with<br>handle | /L 00 | 1 | |
| | ENP | silver | | | |
| (13) | A 986 555 372 03 | inner door release<br>complete<br>with<br>handle | /R 00 | 1 | |
| | ENP | silver | | | |
| (13) | A 986 555 371 04 | inner door release<br>complete<br>with<br>handle | /L 00 | 1 | |
| | ENP | silver | | | |
| (13) | A 986 555 372 04 | inner door release<br>complete<br>with<br>handle | /R 00 | 1 | |
| | ENP | silver | | | |
| (13) | 986 555 271 00 | inner door release<br>complete<br>with<br>handle | /L 00 | 1 | |
| | ENP | silver | | | |
| (13) | 986 555 272 00 | inner door release<br>complete<br>with<br>handle | /R 00 | 1 | |
| | ENP | silver | | | |
| (13) | 986 555 271 01 | inner door release<br>complete<br>with<br>handle | /LL/L 01-02 | 1 | |
| | ENP | silver | | | |
| (13) | 986 555 272 02 | inner door release<br>complete<br>with<br>handle | /LL/R 01-02 | 1 | |
| | ENP | silver | | | |
| (13) | 986 555 271 02 | inner door release<br>complete<br>with<br>handle | /RL/L 01-02 | 1 | |
| | ENP | silver | | | |
| (13) | 986 555 272 01 | inner door release<br>complete<br>with<br>handle | /RL/R 01-02 | 1 | |
| | ENP | silver | | | |
| (13) | 986 555 271 03 | inner door release<br>complete<br>with<br>handle | /LL/L03- | 1 | |
| | FGH | silver | | | |

| Pos | Part Number | Description | Remark | Qty | Model |
|---|---|---|---|---|---|
| (13) | 986 555 272 04 | inner door release<br>complete<br>with<br>handle | /LL/R03- | 1 | |
| | FGH | silver | | | |
| (13) | 986 555 271 04 | inner door release<br>complete<br>with<br>handle | /RL/L03- | 1 | |
| | FGH | silver | | | |
| (13) | 986 555 272 03 | inner door release<br>complete<br>with<br>handle | /RL/R03- | 1 | |
| | FGH | silver | | | |
| 14 | 999 703 440 40 | buffer<br>7 X 10 X 16 | | 2 | |
| (15) | A 996 555 425 00 | handle<br>F >>98XS6 00819<br>F >>98XU6 22717 | /L | 1 | |
| | A02 | gloss black | | | |
| 15 | A 996 555 426 00 | handle<br>F >>98XS6 00819<br>F >>98XU6 22717 | /R | 1 | |
| | A02 | gloss black | | | |
| (15) | A 996 555 425 02 | handle | /L -99 | 1 | |
| | A02 | gloss black | | | |
| 15 | A 996 555 426 02 | handle | /R -99 | 1 | |
| | A02 | gloss black | | | |
| (15) | 996 555 425 03 | handle | /L 00-02 | 1 | |
| | V01 | silver | | | |
| 15 | 996 555 426 03 | handle<br>lacquered | /R 00-02 | 1 | |
| | V01 | silver | | | |
| (15) | 996 555 425 04 | handle | /L 03- | 1 | |
| | V03 | silver | | | |
| 15 | 996 555 426 04 | handle<br>lacquered | /R 03- | 1 | |
| | V03 | silver | | | |
| 16 | 999 166 084 02 | bolt<br>4 X 39 X 37 | | 2 | |
| 17 | 999 166 026 02 | lock<br>4 | | 2 | |
| 18 | 999 507 568 40 | linkage clip<br>F >>98XS6 00819<br>F >>98XU6 22717 | | 2 | |
| (18) | 999 702 281 40 | grommet<br>F 98XS6 00820>><br>F 98XU6 22718>> | | 2 | |
| 19 | 999 522 015 00 | tension spring | | 2 | |
| -- | 996 555 635 00 | hose | | 2 | |
| 20 | 996 613 123 00 | microswitch | | 2 | |
| 21 | 999 073 080 02 | tapping screw<br>4,2 X 16 | | 8 | |
| 22 | 996 555 623 00 | cap | 98-99 | 2 | M563 |
| | 01C | satin black | | | |
| 22 | 996 555 623 01 | cap | 00-02 | 2 | |
| | V01 | silver | | | |
| 22 | 996 555 623 02 | cap | 03- | 2 | |
| | V03 | silver | | | |
| (23) | 986 555 621 00 | lid | /L 97 | 1 | |
| | B12 | black-grey | | | |
| 23 | 986 555 622 00 | lid | /R 97 | 1 | |
| | B12 | black-grey | | | |
| (23) | 986 555 621 00 | lid | /L -99 | 1 | M011/016 |
| | B12 | black-grey | | | |
| 23 | 986 555 622 00 | lid | /R -99 | 1 | M011/016 |
| | B12 | black-grey | | | |

| Pos | Part Number | Description | Remark | Qty | Model |
|---|---|---|---|---|---|
| (23) | 986 555 621 03 | lid<br>lacquered | /L 98- | 1 | |
| | D05 | granite grey | -99 | | M010 |
| | C02 | steel grey | | | M012 |
| | A03 | black | 00- | | |
| 23 | 986 555 622 03 | lid<br>lacquered | /R 98- | 1 | |
| | D05 | granite grey | -99 | | M010 |
| | C02 | steel grey | | | M012 |
| | A03 | black | 00- | | |
| 23 | 986 555 990 00 | lid<br>leather | /L 01- | 1 | XTC/XTF/XTK |
| | A11 | black | | | |
| | C51 | graphite grey | | | |
| | S31 | savanna | | | |
| | G11 | metropole blue | | | |
| | J31 | nephrite green | | | |
| | M31 | boxster red | | | |
| | D12 | dark grey | | | |
| | T12 | brown/natural | | | |
| | P12 | cinnamon brown | | | |
| (23) | 986 555 991 00 | lid<br>leather | /R 01- | 1 | XTC/XTF/XTK |
| | A11 | black | | | |
| | C51 | graphite grey | | | |
| | S31 | savanna | | | |
| | G11 | metropole blue | | | |
| | J31 | nephrite green | | | |
| | M31 | boxster red | | | |
| | D12 | dark grey | | | |
| | T12 | brown/natural | | | |
| | P12 | cinnamon brown | | | |
| 24 | 999 073 081 02 | tapping screw<br>4,2 X 13 | | 4 | |
| (25) | 986 555 393 00 | mounting piece<br>handle | /L 97 | 1 | |
| | B12 | black-grey | | | |
| 25 | 986 555 394 00 | mounting piece<br>handle | /R 97 | 1 | |
| | B12 | black-grey | | | |
| (25) | 986 555 393 00 | mounting piece<br>handle | /L 98-99 | 1 | M011/016 |
| | B12 | black-grey | | | |
| 25 | 986 555 394 00 | mounting piece<br>handle | /R 98-99 | 1 | M011/016 |
| | B12 | black-grey | | | |
| (25) | 986 555 393 01 | mounting piece<br>lacquered | /L | 1 | |
| | D05 | granite grey | 99 | | M010 |
| | C02 | metal grey | 98- | | M012 |
| | A03 | black | 00- | | |
| 25 | 986 555 394 01 | mounting piece<br>lacquered | /R | 1 | |
| | D05 | granite grey | 99 | | M010 |
| | C02 | metal grey | 98- | | M012 |
| | A03 | black | 00- | | |
| (26) | 986 555 351 00 | handle<br>lacquered<br>leather | /L 97 | 1 | |
| | EAP | black | | | |
| 26 | 986 555 352 00 | handle<br>lacquered<br>leather | /R 97 | 1 | |
| | EAP | black | | | |

| Pos | Part Number | Description | Remark | Qty | Model |
|---|---|---|---|---|---|
| (26) | 986 555 351 00 | handle lacquered leather | /L 98-99 | 1 | M016 |
| | EAP | black | | | |
| 26 | 986 555 352 00 | handle lacquered leather | /R 98-99 | 1 | M016 |
| | EAP | black | | | |
| (26) | 986 555 351 01 | handle lacquered | /L 98-99 | 1 | M011/012 |
| | EJW | metal grey | | | |
| 26 | 986 555 352 01 | handle lacquered | /R 98-99 | 1 | M011/012 |
| | EJW | metal grey | | | |
| (26) | 986 555 351 04 | handle lacquered | /L 99 | 1 | M010 |
| | EJT | granite grey | | | |
| 26 | 986 555 352 04 | handle lacquered | /R 99 | 1 | M010 |
| | EJT | granite grey | | | |
| (26) | 986 555 351 05 | handle lacquered leather | /L 00- | 1 | M009 |
| | ESK | black | | | |
| | EVU | black | | | M009/012 |
| | FHH | graphite grey | | | |
| | FHI | savanna | | | |
| | FHC | metropole blue | | | |
| | FHN | nephrite green | | | |
| | FHO | boxster red | | | |
| | FHP | cinnamon brown | | | |
| | FHQ | dark grey/natural | | | |
| | FHR | brown/natural | | | |

| Pos | Part Number | Description | Remark | Qty | Model |
|---|---|---|---|---|---|
| (26) | 986 555 352 05 | handle lacquered leather | /R 00- | 1 | M009 |
| | ESK | black | | | |
| | EVU | black | | | M009/012 |
| | FHH | graphite grey | | | |
| | FHI | savanna | | | |
| | FHC | metropole blue | | | |
| | FHN | nephrite green | | | |
| | FHO | boxster red | | | |
| | FHP | cinnamon brown | | | |
| | FHQ | dark grey/natural | | | |
| | FHR | brown/natural | | | |
| (26) | 986 555 351 06 | handle lacquered leather | /L00 -02 | 1 | |
| | FDE | black | | | M008 |
| | EOB | black | | | M008/012 |
| (26) | 986 555 352 06 | handle lacquered leather | /R00 -02 | 1 | |
| | FDE | black | | | M008 |
| | EOB | black | | | M008/012 |
| (26) | 986 555 351 07 | handle lacquered leather | /L 03- | 1 | M008 |
| | FHA | black | | | |
| | FHS | graphite grey | | | |
| | FHT | savanna | | | |
| | FHU | metropole blue | | | |
| | FHV | nephrite green | 03 | | |
| | FHW | boxster red | | | |
| | FHX | cinnamon brown | | | |

| Pos | Part Number | Description | Remark | Qty | Model |
|---|---|---|---|---|---|
| | FHY | dark grey/natural | | | |
| | FHZ | brown/natural | | | |
| (26) | 986 555 352 07 | handle<br>lacquered<br>leather | /R 03- | 1 | M008 |
| | FHA | black | | | |
| | FHS | graphite grey | | | |
| | FHT | savanna | | | |
| | FHU | metropole blue | | | |
| | FHV | nephrite green | 03 | | |
| | FHW | boxster red | | | |
| | FHX | cinnamon brown | | | |
| | FHY | dark grey/natural | | | |
| | FHZ | brown/natural | | | |
| (26) | 986 555 351 08 | handle<br>lacquered<br>leather | /L 04 | 1 | M091 |
| | FKK | cocoa | | | |
| | FKL | dark grey/natural | | | |
| (26) | 986 555 352 08 | handle<br>lacquered<br>leather | /R 04 | 1 | M091 |
| | FKK | cocoa | | | |
| | FKL | dark grey/natural | | | |
| (26) | 986 555 987 01 | handle<br>leather<br>with<br>logo | /L 01- | 1 | XTC |
| | A11 | black | | | |
| | C51 | graphite grey | | | |
| | S31 | savanna | | | |
| | G11 | metropole blue | | | |
| | J31 | nephrite green | | | |
| | M31 | boxster red | | | |
| | D12 | dark grey | | | |
| | T12 | brown/natural | | | |
| | P12 | cinnamon brown | | | |
| (26) | 986 555 988 01 | handle<br>leather<br>with<br>logo | /R 01- | 1 | XTC |
| | A11 | black | | | |
| | C51 | graphite grey | | | |
| | S31 | savanna | | | |
| | G11 | metropole blue | | | |
| | J31 | nephrite green | | | |
| | M31 | boxster red | | | |
| | D12 | dark grey | | | |
| | T12 | brown/natural | | | |
| | P12 | cinnamon brown | | | |
| (26) | 986 555 987 03 | handle<br>carbon | /L 01- | 1 | XTE |
| | A11 | black | | | |
| | C51 | graphite grey | | | |
| | S31 | savanna | | | |
| | G11 | metropole blue | | | |
| | J31 | nephrite green | -03 | | |
| | M31 | boxster red | | | |
| | P12 | cinnamon brown | | | |
| | D12 | dark grey/natural | | | |
| | T12 | brown/natural | | | |
| (26) | 986 555 988 03 | handle<br>carbon | /R 01- | 1 | XTE |
| | A11 | black | | | |

| Pos | Part Number | Description | Remark | Qty | Model |
|---|---|---|---|---|---|
| | C51 | graphite grey | | | |
| | S31 | savanna | | | |
| | G11 | metropole blue | | | |
| | J31 | nephrite green | -03 | | |
| | M31 | boxster red | | | |
| | P12 | cinnamon brown | | | |
| | D12 | dark grey/natural | | | |
| | T12 | brown/natural | | | |
| 26 | 986 555 987 04 | handle<br>leather | /L 01- | 1 | XTK |
| | A11 | black | | | |
| | C51 | graphite grey | | | |
| | S31 | savanna | | | |
| | G11 | metropole blue | | | |
| | J31 | nephrite green | | | |
| | M31 | boxster red | | | |
| | P12 | cinnamon brown | | | |
| | D12 | dark grey/natural | | | |
| | T12 | brown/natural | | | |
| 26 | 986 555 988 04 | handle<br>leather | /R 01- | 1 | XTK |
| | A11 | black | | | |
| | C51 | graphite grey | | | |
| | S31 | savanna | | | |
| | G11 | metropole blue | | | |
| | J31 | nephrite green | | | |
| | M31 | boxster red | | | |
| | P12 | cinnamon brown | | | |
| | D12 | dark grey/natural | | | |
| | T12 | brown/natural | | | |

| Pos | Part Number | Description | Remark | Qty | Model |
|---|---|---|---|---|---|
| (26) | 986 555 987 06 | handle<br>leather | /L 03- | 1 | XTR |
| | A11 | black | | | |
| | C51 | graphite grey | | | |
| | S31 | savanna | | | |
| | G11 | metropole blue | | | |
| | J31 | nephrite green | | | |
| | M31 | boxster red | | | |
| | D12 | dark grey/natural | | | |
| | T12 | brown/natural | | | |
| | P12 | cinnamon brown | | | |
| 26 | 986 555 988 06 | handle<br>leather | /R 03- | 1 | XTR |
| | A11 | black | | | |
| | C51 | graphite grey | | | |
| | S31 | savanna | | | |
| | G11 | metropole blue | | | |
| | J31 | nephrite green | | | |
| | M31 | boxster red | | | |
| | D12 | dark grey/natural | | | |
| | T12 | brown/natural | | | |
| | P12 | cinnamon brown | | | |
| 27 | 999 919 182 09 | oval-head screw<br>4,0 X 20 | | 4 | |
| 28 | 999 073 112 09 | oval-head screw<br>M 6 X 80 | | 2 | |
| (29) | 986 555 721 00 | covering<br>handle | /L 97 | 1 | |
| | 01C | satin black | | | |
| 29 | 986 555 722 00 | covering<br>handle | /R 97 | 1 | |
| | 01C | satin black | | | |

| Pos | Part Number | Description | Remark | Qty | Model |
|---|---|---|---|---|---|
| (29) | 986 555 721 00 | covering handle | /L98-99 | 1 | M016 |
| | 01C | satin black | | | |
| 29 | 986 555 722 00 | covering handle | /R98-99 | 1 | M016 |
| | 01C | satin black | | | |
| (29) | 986 555 721 01 | covering lacquered | /L 98- | 1 | |
| | 25H | ocean jade metallic | -99 | | M011 |
| | 3AW | zenith blue metallic | -99 | | M011 |
| | C02 | metal grey | | | M012 |
| | D05 | granite grey | 99 | | M010 |
| | A03 | black | 00- | | M009 |
| 29 | 986 555 722 01 | covering lacquered | /R 98- | 1 | |
| | 25H | ocean jade metallic | -99 | | M011 |
| | 3AW | zenith blue metallic | -99 | | M011 |
| | C02 | metal grey | | | M012 |
| | D05 | granite grey | 99 | | M010 |
| | A03 | black | 00- | | M009 |
| (29) | 986 555 721 02 | covering lacquered | /L00 -02 | 1 | M008 |
| | V01 | silver | | | |
| 29 | 986 555 722 02 | covering lacquered | /R00 -02 | 1 | M008 |
| | V01 | silver | | | |
| (29) | 986 555 721 03 | covering | /L 03- | 1 | M008 |
| | V03 | silver | | | |
| (29) | 986 555 721 03 | covering | /L 03- | 1 | M009/XTC/XTE MXTK/XTR |
| | V03 | silver | | | |
| 29 | 986 555 722 03 | covering | /R 03- | 1 | M008 |
| | V03 | silver | | | |
| 29 | 986 555 722 03 | covering | /R 03- | 1 | M009/XTC/XTE XTK/XTR |
| | V03 | silver | | | |
| (29) | 986 555 985 01 | covering | /L 00-02 | 1 | XTF/M009 |
| 29 | 986 555 986 01 | covering arctic silver | /R 00-02 | 1 | XTF/M009 |
| 30 | 999 073 113 09 | oval-head screw M 6 X 50 | | 2 | |
| (31) | 986 555 591 00 | cover | /L 97 | 1 | |
| | B12 | black-grey | | | |
| 31 | 986 555 592 00 | cover | /R 97 | 1 | |
| | B12 | black-grey | | | |
| (31) | 986 555 591 00 | cover | /L 98-99 | 1 | M011/016 |
| | B12 | black-grey | | | |
| 31 | 986 555 592 00 | cover | /R 98-99 | 1 | M011/016 |
| | B12 | black-grey | | | |
| (31) | 986 555 591 01 | cover lacquered | /L | 1 | |
| | C02 | metal grey | 98- | | M012 |
| | D05 | granite grey | 99 | | M010 |
| | A03 | black | 00- | | |
| 31 | 986 555 592 01 | cover lacquered | /R | 1 | |
| | C02 | metal grey | 98- | | M012 |
| | D05 | granite grey | 99 | | M010 |
| | A03 | black | 00- | | |
| 31 | 986 555 981 01 | cover leather | /L 01- | 1 | XTC/XTF |
| | A11 | black | | | |
| | C51 | graphite grey | | | |
| | S31 | savanna | | | |

| Pos | Part Number | Description | Remark | Qty | Model |
|---|---|---|---|---|---|
| | G11 | metropole blue | | | |
| | J31 | nephrite green | | | |
| | M31 | boxster red | | | |
| | D12 | dark grey | | | |
| | T12 | brown/natural | | | |
| | P12 | cinnamon brown | | | |
| (31) | 986 555 982 01 | cover<br>leather | /R 01- | 1 | XTC/XTF |
| | A11 | black | | | |
| | C51 | graphite grey | | | |
| | S31 | savanna | | | |
| | G11 | metropole blue | | | |
| | J31 | nephrite green | | | |
| | M31 | boxster red | | | |
| | D12 | dark grey | | | |
| | T12 | brown/natural | | | |
| | P12 | cinnamon brown | | | |

| Pos | Part Number | Description | Remark | Qty | Model |
|---|---|---|---|---|---|

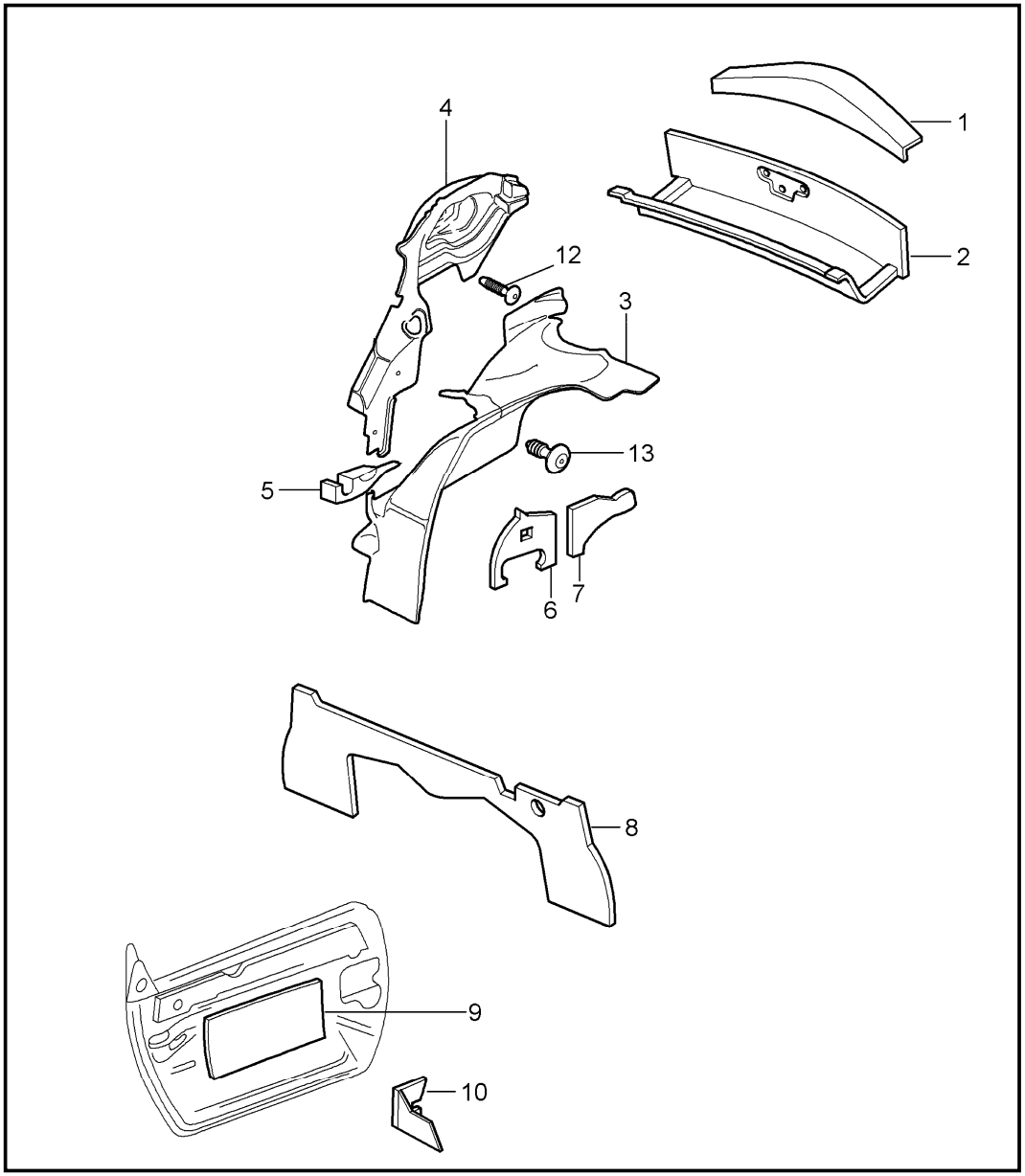


| Pos | Part Number | Description | Remark | Qty | Model |
|---|---|---|---|---|---|
| | | body<br>sound proofing 1 | | | |
| 1 | 986 556 665 02 | sound absorber<br>cross member | | 1 | |
| 2 | 986 556 621 01 | sound absorber | -03 | 1 | |
| 2 | 986 556 621 02 | sound absorber<br>tray<br>convertible top | 04- | 1 | |
| -- | 999 507 581 40 | stopper<br>8,5 | | 6 | |
| (3) | 986 556 623 01 | sound absorber | /L 97 | 1 | |
| 3 | 986 556 624 01 | sound absorber | /R 97 | 1 | |
| (3) | 986 556 623 02 | sound absorber | /L 98-03 | 1 | |
| (3) | 986 556 623 03 | sound absorber | /L 04- | 1 | |
| (3) | 986 556 624 02 | sound absorber<br>tray<br>convertible top | /R 98- | 1 | |
| (4) | 986 556 663 02 | sound absorber | /L | 1 | |
| 4 | 986 556 664 02 | sound absorber<br>rear bulkhead | /R | 1 | |
| (5) | 986 556 671 01 | seal | /L -03 | 1 | |
| 5 | 986 556 672 01 | seal | /R -03 | 1 | |
| (5) | 986 556 671 02 | seal<br>roll-over bar | /L/R 04- | 1 | |
| (6) | 986 556 721 02 | sound absorber | /L | 1 | |
| 6 | 986 556 722 02 | sound absorber<br>engine compartment | /R | 1 | |
| 7 | 986 556 724 01 | sound absorber<br>engine compartment | /R | 1 | |
| 8 | 986 556 741 02 | sound absorber<br>engine compartment | | 1 | |
| 9 | 996 556 531 01 | insulation<br>door | | 2 | |
| (10) | 996 556 605 01 | sound absorber | /L | 1 | |
| 10 | 996 556 606 01 | sound absorber<br>wheel housing panel | /R | 1 | |

| Pos | Part Number | Description | Remark | Qty | Model |
|---|---|---|---|---|---|
| 11 | 996 556 723 01 | sound absorber<br>firewall | /LL | 1 | |
| (11) | 996 556 724 01 | sound absorber<br>firewall | /RL | 1 | |
| 12 | 999 703 432 40 | stopper<br>8,0 | | 2 | |
| 13 | 999 507 581 40 | stopper<br>8,5 | | 4 | |

| Pos | Part Number | Description | Remark | Qty | Model |
|---|---|---|---|---|---|

| Model | Year | MG | SG | Illustration | Restrictions | UPD | 18:31 | 30.07.2008 | PET |
|---|---|---|---|---|---|---|---|---|---|
| 986 | 2004 | 8 | 09 | 809-00 | | 229 | | | |

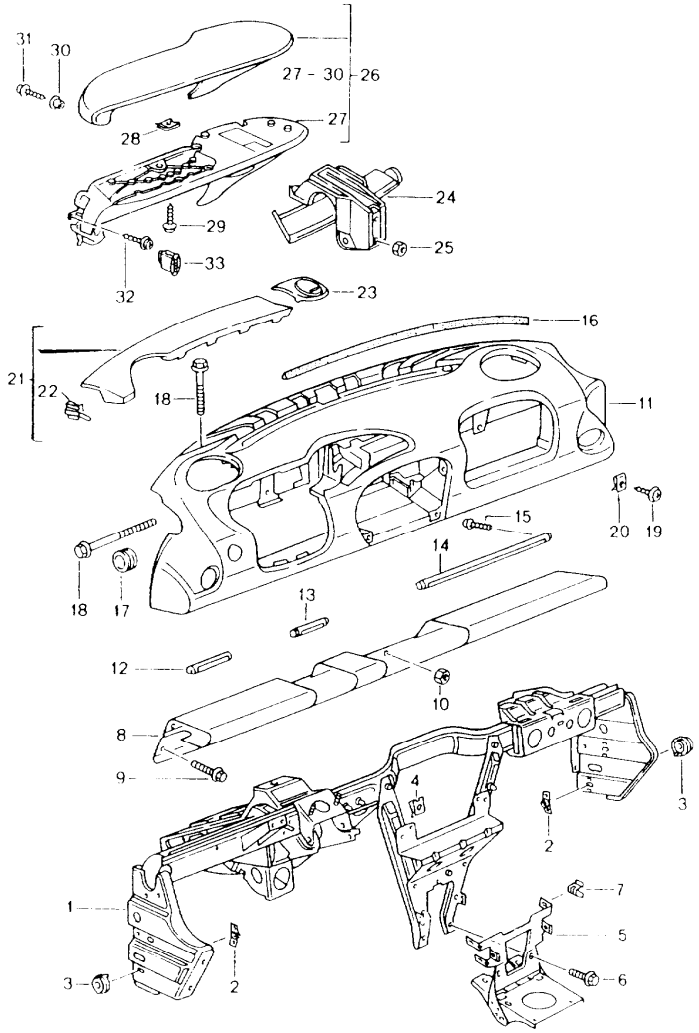


| Pos | Part Number | Description | Remark | Qty | Model |
|---|---|---|---|---|---|
| | | dashboard trim<br>with<br>retaining frame | | | |
| 1 | 996 552 061 02 | retaining frame | /LL 97 | 1 | |
| | GRV | prime coated | | | |
| (1) | 996 552 061 03 | retaining frame | /RL 97 | 1 | |
| | GRV | prime coated | | | |
| 1 | 996 552 061 12 | retaining frame | /LL 98- | 1 | |
| 1 | 996 552 061 13 | retaining frame | /RL 98- | 1 | |
| 2 | 996 552 805 00 | threaded plate | | 4 | |
| 3 | 996 552 545 00 | shim | | 4 | |
| 4 | 999 507 462 02 | speed nut<br>4,8 | | 9 | |
| (5) | 996 552 309 07 | support | | 1 | |
| (5) | 996 552 309 08 | support | | 1 | M476 |
| 6 | 900 378 155 09 | hexagon-head tapping screw<br>M 6 X 16 | | 6 | |
| 7 | 999 507 574 02 | clamp<br>8 X 10/1,2 | | 4 | |
| 11 | A 996 552 081 04 | dashboard trim<br>leatherette/<br>moulding | /LL 97 | 1 | |
| | EJN | black | | | |
| | EJO | graphite grey | | | |
| | EJP | savanna | | | |
| (11) | A 996 552 082 00 | dashboard trim<br>black-grey<br>leatherette/<br>moulding | /RL 97 | 1 | |
| | EJN | black | | | |
| | EJO | graphite grey | | | |
| | EJP | savanna | | | |

| Pos | Part Number | Description | Remark | Qty | Model |
|---|---|---|---|---|---|
| (11) | A 986 552 081 01 | dashboard trim<br>moulding<br>black-grey<br>leatherette/ | /LL -98 | 1 | M011/016 |
| | DHN | black | | | |
| | DHO | graphite grey | | | |
| | DHP | savanna | | | |
| | EJQ | metropole blue | | | |
| 11 | 996 552 109 00 | dashboard trim<br>leatherette<br>without<br>moulding | /LL -99 | 1 | M010/011/016 |
| | A18 | black | | | |
| | C18 | graphite grey | | | |
| | S18 | savanna | | | |
| | G18 | metropole blue | | | |
| (11) | 996 552 110 00 | dashboard trim<br>leatherette<br>without<br>moulding | /RL -99 | 1 | M010/011/016 |
| | A18 | black | | | |
| | C18 | graphite grey | | | |
| | S18 | savanna | | | |
| | G18 | metropole blue | | | |
| 11 | 996 552 109 00 | dashboard trim<br>leatherette<br>without<br>moulding | /LL00-02 | 1 | M016 |
| | A12 | black | | | |
| | C52 | graphite grey | | | |
| | S32 | savanna | | | |
| | G12 | metropole blue | | | |
| | J32 | nephrite green | -03 | | |

| Pos | Part Number | Description | Remark | Qty | Model |
|---|---|---|---|---|---|
| (11) | 996 552 110 00 | dashboard trim<br>leatherette<br>without<br>moulding | /RL00-02 | 1 | M016 |
| | A12 | black | | | |
| | C52 | graphite grey | | | |
| | S32 | savanna | | | |
| | G12 | metropole blue | | | |
| | J32 | nephrite green | -03 | | |
| (11) | 996 552 109 02 | dashboard trim<br>leatherette<br>without<br>moulding | /LL 03- | 1 | M016 |
| | A12 | black | | | |
| | C52 | graphite grey | | | |
| | S32 | savanna | | | |
| | G12 | metropole blue | | | |
| | J32 | nephrite green | -03 | | |
| (11) | 996 552 110 02 | dashboard trim<br>leatherette<br>without<br>moulding | /RL 03- | 1 | M016 |
| | A12 | black | | | |
| | C52 | graphite grey | | | |
| | S32 | savanna | | | |
| | G12 | metropole blue | | | |
| | J32 | nephrite green | -03 | | |
| 11 | 986 552 109 00 | dashboard trim<br>leatherette | /LL -02 | 1 | M012 |
| | A40 | black | | | |
| (11) | 986 552 110 00 | dashboard trim<br>leatherette | /RL -02 | 1 | M012 |
| | A40 | black | | | |
| (11) | 986 552 109 01 | dashboard trim<br>leatherette | /LL 03- | 1 | M012 |

| Pos | Part Number | Description | Remark | Qty | Model |
|---|---|---|---|---|---|
| | A40 | black | | | |
| (11) | 986 552 110 01 | dashboard trim<br>leatherette | /RL 03- | 1 | M012 |
| | A40 | black | | | |
| 11 | 996 552 101 00 | dashboard trim<br>leather/<br>without<br>moulding | /LL -01 | 1 | M981 |
| | A11 | black | -99 | | |
| | EVL | black | 00- | | |
| | C51 | graphite grey | | | |
| | S31 | savanna | | | |
| | G11 | metropole blue | | | |
| | J31 | nephrite green | | | |
| | M31 | boxster red | | | |
| | D12 | dark grey/natural | 00- | | |
| | T12 | brown/natural | 00- | | |
| | P12 | cinnamon brown | 01 | | |
| (11) | 996 552 102 00 | dashboard trim<br>leather/<br>without<br>moulding | /RL -01 | 1 | M981 |
| | A11 | black | -99 | | |
| | EVL | black | 00- | | |
| | C51 | graphite grey | | | |
| | S31 | savanna | | | |
| | G11 | metropole blue | | | |
| | J31 | nephrite green | | | |
| | M31 | boxster red | | | |
| | D12 | dark grey/natural | 00- | | |
| | T12 | brown/natural | 00- | | |
| | P12 | cinnamon brown | 01 | | |

| Pos | Part Number | Description | Remark | Qty | Model |
|---|---|---|---|---|---|
| (11) | 996 552 101 02 | dashboard trim<br>leather/<br>without<br>moulding | /LL 02 | 1 | M981 |
| | A11 | black | | | |
| | C51 | graphite grey | | | |
| | S31 | savanna | | | |
| | G11 | metropole blue | | | |
| | J31 | nephrite green | | | |
| | M31 | boxster red | | | |
| | P12 | cinnamon brown | | | |
| | D12 | dark grey/natural | | | |
| | T12 | brown/natural | | | |
| (11) | 996 552 102 02 | dashboard trim<br>leather/<br>without<br>moulding | /RL 02 | 1 | M981 |
| | A11 | black | | | |
| | C51 | graphite grey | | | |
| | S31 | savanna | | | |
| | G11 | metropole blue | | | |
| | J31 | nephrite green | | | |
| | M31 | boxster red | | | |
| | P12 | cinnamon brown | | | |
| | D12 | dark grey/natural | | | |
| | T12 | brown/natural | | | |
| (11) | 996 552 101 01 | dashboard trim<br>leather<br>with<br>cut-outs<br>glove compartment | /LL 03- | 1 | |
| | A11 | black | | | |
| | C51 | graphite grey | | | |
| | S31 | savanna | | | |

| Pos | Part Number | Description | Remark | Qty | Model |
|---|---|---|---|---|---|
| | G11 | metropole blue | 98- | | |
| | J31 | nephrite green | -03 | | |
| | M31 | boxster red | | | |
| | D12 | dark grey | 00- | | |
| | T12 | brown/natural | 00- | | |
| | P12 | cinnamon brown | 01- | | |
| | 9V6 | cocoa | 04- | | |
| (11) | 996 552 102 01 | dashboard trim<br>leather<br>with<br>cut-outs<br>glove compartment | /RL 03- | 1 | |
| | A11 | black | | | |
| | C51 | graphite grey | | | |
| | S31 | savanna | | | |
| | G11 | metropole blue | 98- | | |
| | J31 | nephrite green | -03 | | |
| | M31 | boxster red | | | |
| | D12 | dark grey | 00- | | |
| | T12 | brown/natural | 00- | | |
| | P12 | cinnamon brown | 01- | | |
| | 9V6 | cocoa | 04- | | |
| -- | 996 552 749 00 | reinforcement strip | /LL 03- | 1 | |
| -- | 996 552 750 00 | reinforcement strip<br>driver's side | /RL 03- | 1 | |
| -- | 996 552 753 00 | reinforcement strip | /LL 03- | 1 | M573 |
| -- | 996 552 753 01 | reinforcement strip | /LL 03- | 1 | M574 |
| -- | 996 552 754 00 | reinforcement strip | /RL 03- | 1 | M573 |
| -- | 996 552 754 01 | reinforcement strip<br>glove compartment | /RL 03- | 1 | M574 |
| -- | 999 073 169 07 | tapping screw<br>4,8 X 16 | 03- | 1 | |

| Pos | Part Number | Description | Remark | Qty | Model |
|---|---|---|---|---|---|
| -- | 999 507 796 02 | u-clamp<br>2,0 | 03- | 3 | |
| -- | 999 551 145 40 | lining strap<br>15 X 1,3 X 50 | | 2 | |
| -- | 999 507 768 02 | speed nut<br>4,2 | | 18 | |
| 12 | 996 552 381 01 | moulding<br>driver's side | /LL/L-99 | 1 | M011/012/016 |
| | B12 | black-grey | | | |
| (12) | 996 552 382 00 | moulding<br>driver's side | /RL/R-99 | 1 | M011/012/016 |
| | B12 | black-grey | | | |
| 12 | 996 552 381 02 | moulding<br>driver's side<br>lacquered | /LL/L99 | 1 | M010 |
| | D05 | granite grey | | | |
| (12) | 996 552 382 01 | moulding<br>driver's side<br>lacquered | /RL/R99 | 1 | M010 |
| | D05 | granite grey | | | |
| 12 | 996 552 381 02 | moulding<br>driver's side<br>lacquered | /LL/L00- | 1 | |
| | A03 | black | | | |
| (12) | 996 552 382 01 | moulding<br>driver's side<br>lacquered | /RL/R00- | 1 | |
| | A03 | black | | | |
| 12 | 986 552 381 00 | moulding<br>driver's side<br>lacquered | /LL/L04 | 1 | M091 |
| | M7Z | gt silver metallic | | | |
| (12) | 986 552 382 00 | moulding<br>driver's side<br>lacquered | /RL/R04 | 1 | M091 |
| | M7Z | gt silver metallic | | | |

| Pos | Part Number | Description | Remark | Qty | Model |
|---|---|---|---|---|---|
| 12 | 996 552 996 00 | moulding<br>driver's side<br>leather | /LL/L01- | 1 | XNU |
| | A11 | black | | | |
| | C51 | graphite grey | | | |
| | S31 | savanna | | | |
| | G11 | metropole blue | | | |
| | J31 | nephrite green | | | |
| | M31 | boxster red | | | |
| | D12 | dark grey | | | |
| | T12 | brown/natural | | | |
| | P12 | cinnamon brown | | | |
| (12) | 996 552 997 00 | moulding<br>driver's side<br>leather | /RL/R01- | 1 | XNU |
| | A11 | black | | | |
| | C51 | graphite grey | | | |
| | S31 | savanna | | | |
| | G11 | metropole blue | | | |
| | J31 | nephrite green | | | |
| | M31 | boxster red | | | |
| | D12 | dark grey | | | |
| | T12 | brown/natural | | | |
| | P12 | cinnamon brown | | | |
| 12 | 996 552 996 04 | moulding<br>driver's side<br>rootwood<br>light | /LL/L01- | 1 | XNV |
| (12) | 996 552 997 04 | moulding<br>driver's side<br>rootwood<br>light | /RL/R01- | 1 | XNV |
| 12 | 996 552 996 05 | moulding<br>driver's side<br>rootwood<br>dark | /LL/L01- | 1 | XNW |
| (12) | 996 552 997 05 | moulding<br>driver's side<br>rootwood<br>dark | /RL/R01- | 1 | XNW |
| 12 | 996 552 996 01 | moulding<br>driver's side<br>carbon | /LL/L01- | 1 | XNX |
| (12) | 996 552 997 01 | moulding<br>driver's side<br>carbon | /RL/R01- | 1 | XNX |
| 12 | 996 552 996 03 | moulding<br>driver's side<br>aluminium<br>arctic silver | /LL/L<br>01-02 | 1 | XNY |
| (12) | 996 552 997 03 | moulding<br>driver's side<br>aluminium<br>arctic silver | /RL/R<br>01-02 | 1 | XNY |
| 12 | 996 552 996 12 | moulding<br>aluminium<br>driver's side<br>silver | /LL/L03- | 1 | XCA |
| (12) | 996 552 997 12 | moulding<br>aluminium<br>driver's side<br>silver | /RL/R03- | 1 | XCA |
| 13 | 996 552 383 01 | moulding<br>centre | /LL -99 | 1 | M011/012/016 |
| | B12 | black-grey | | | |
| (13) | 996 552 384 00 | moulding<br>centre | /RL -99 | 1 | M011/012/016 |
| | B12 | black-grey | | | |
| 13 | 996 552 383 02 | moulding<br>centre<br>lacquered | /LL 99 | 1 | M010 |
| | D05 | granite grey | | | |

| Pos | Part Number | Description | Remark | Qty | Model |
|---|---|---|---|---|---|
| (13) | 996 552 384 01 | moulding<br>centre<br>lacquered | /RL 99 | 1 | M010 |
| | D05 | granite grey | | | |
| 13 | 996 552 383 02 | moulding<br>centre<br>lacquered | /LL 00- | 1 | |
| | A03 | black | | | |
| (13) | 996 552 384 01 | moulding<br>centre<br>lacquered | /RL 00- | 1 | |
| | A03 | black | | | |
| 13 | 986 552 383 00 | moulding<br>centre<br>lacquered | /LL 04 | 1 | M091 |
| | M7Z | gt silver metallic | | | |
| (13) | 986 552 384 00 | moulding<br>centre<br>lacquered | /RL 04 | 1 | M091 |
| | M7Z | gt silver metallic | | | |
| 13 | 996 552 998 00 | moulding<br>centre<br>leather | /LL 01- | 1 | XNU |
| | A11 | black | | | |
| | C51 | graphite grey | | | |
| | S31 | savanna | | | |
| | J31 | nephrite green | | | |
| | M31 | boxster red | | | |
| | D12 | dark grey | | | |
| | T12 | brown/natural | | | |
| | P12 | cinnamon brown | | | |
| (13) | 996 552 998 01 | moulding<br>centre<br>leather | /RL 01- | 1 | XNU |
| | A11 | black | | | |
| | C51 | graphite grey | | | |
| | S31 | savanna | | | |
| | J31 | nephrite green | | | |
| | M31 | boxster red | | | |
| | D12 | dark grey | | | |
| | T12 | brown/natural | | | |
| | P12 | cinnamon brown | | | |
| 13 | 996 552 998 10 | moulding<br>centre<br>rootwood<br>dark | /LL 01- | 1 | XNW |
| (13) | 996 552 998 11 | moulding<br>centre<br>rootwood<br>dark | /RL 01- | 1 | XNW |
| 13 | 996 552 998 06 | moulding<br>centre<br>aluminium<br>arctic silver | /LL01-02 | 1 | XNY |
| (13) | 996 552 998 07 | moulding<br>centre<br>aluminium<br>arctic silver | /RL01-02 | 1 | XNY |
| 13 | 996 552 998 14 | moulding<br>centre | /LL 03- | 1 | XCA |
| (13) | 996 552 998 15 | moulding<br>silver<br>centre | /RL 03- | 1 | XCA |
| 14 | 996 552 385 01 | moulding<br>passenger's side | /LL/R-99 | 1 | M011/012/016 |
| | B12 | black-grey | | | |
| (14) | 996 552 386 01 | moulding<br>passenger's side | /RL/L-99 | 1 | M011/012/016 |
| | B12 | black-grey | | | |
| 14 | 996 552 385 02 | moulding<br>passenger's side | /LL/R99 | 1 | M010 |
| | D05 | granite grey | | | |
| (14) | 996 552 386 02 | moulding<br>lacquered<br>passenger's side | /RL/L99 | 1 | M010 |

| Pos | Part Number | Description | Remark | Qty | Model |
|---|---|---|---|---|---|
| | D05 | granite grey | | | |
| 14 | 996 552 385 03 | moulding<br>passenger's side<br>lacquered | /LL/R00- | 1 | |
| | A03 | black | | | |
| (14) | 996 552 386 03 | moulding<br>passenger's side<br>lacquered | /RL/L00- | 1 | |
| | A03 | black | | | |
| 14 | 986 552 385 00 | moulding<br>passenger's side<br>lacquered | /LL/L04 | 1 | M091 |
| | M7Z | gt silver metallic | | | |
| (14) | 986 552 386 00 | moulding<br>passenger's side<br>lacquered | /RL/R04 | 1 | M091 |
| | M7Z | gt silver metallic | | | |
| 14 | 996 552 959 00 | moulding<br>passenger's side | /LL/R00- | 1 | XNU |
| | A11 | black | | | |
| | C51 | graphite grey | | | |
| | S31 | savanna | | | |
| | G11 | metropole blue | | | |
| | J31 | nephrite green | | | |
| | M31 | boxster red | | | |
| | D12 | dark grey | | | |
| | T12 | brown/natural | | | |
| | P12 | cinnamon brown | 01- | | |
| (14) | 996 552 959 01 | moulding<br>passenger's side | /RL/L00- | 1 | XNU |
| | A11 | black | | | |
| | C51 | graphite grey | | | |
| | S31 | savanna | | | |
| | G11 | metropole blue | | | |
| | J31 | nephrite green | | | |
| | M31 | boxster red | | | |
| | D12 | dark grey | | | |
| | T12 | brown/natural | | | |
| | P12 | cinnamon brown | 01- | | |
| 14 | 996 552 959 04 | moulding<br>passenger's side<br>rootwood<br>dark | /LL/R00- | 1 | XNW |
| (14) | 996 552 959 05 | moulding<br>passenger's side<br>rootwood<br>dark | /RL/L00- | 1 | XNW |
| 14 | 996 552 959 06 | moulding<br>passenger's side<br>carbon | /LL/R00- | 1 | XNX |
| (14) | 996 552 959 07 | moulding<br>passenger's side<br>carbon | /RL/L00- | 1 | XNX |
| 14 | 996 552 959 08 | moulding<br>passenger's side<br>aluminium<br>arctic silver | /LL/R-02 | 1 | XNY |
| (14) | 996 552 959 09 | moulding<br>passenger's side<br>aluminium<br>arctic silver | /RL/L-02 | 1 | XNY |
| 14 | 996 552 959 10 | moulding<br>aluminium<br>passenger's side<br>silver | /LL/R03- | 1 | XCA |
| (14) | 996 552 959 11 | moulding<br>aluminium<br>passenger's side<br>silver | /RL/L03- | 1 | XCA |
| 15 | 999 919 203 07 | oval-head screw<br>3 X 10 | | 11 | |
| 16 | 996 552 645 00 | gasket<br>cowl | | 1 | |
| 17 | 999 703 435 40 | lid<br>15,0 X 26,0 | | 2 | |

| Pos | Part Number | Description | Remark | Qty | Model |
|---|---|---|---|---|---|
| 18 | 999 074 057 09 | hexagon-head bolt<br>M 8 X 125 | | 4 | |
| 19 | 999 073 169 07 | tapping screw<br>4,8 X 16 | | 11 | |
| 20 | 999 507 462 02 | speed nut | | 9 | |
| 20 | 999 591 855 02 | speed nut<br>4,8 | | 1 | |
| 21 | 996 552 185 02 | defroster trim<br>F >>98VS6 04498 | /L | 1 | |
| | B12 | black-grey | | | |
| (21) | 996 552 186 02 | defroster trim<br>F >>98VS6 04498 | /R | 1 | |
| | B12 | black-grey | | | |
| 21 | 986 552 185 00 | defroster trim<br>F 98VS6 04499>> | /L -98 | 1 | |
| | B12 | black-grey | | | |
| (21) | 986 552 186 00 | defroster trim<br>F 98VS6 04499>> | /R -98 | 1 | |
| | B12 | black-grey | | | |
| 21 | 986 552 185 00 | defroster trim | /L 99 | 1 | M011/012/016 |
| | B12 | black-grey | | | |
| (21) | 986 552 186 00 | defroster trim | /R 99 | 1 | M011/012/016 |
| | B12 | black-grey | | | |
| 21 | 996 552 185 04 | defroster trim | /L | 1 | |
| | D05 | granite grey | 99 | | M010 |
| | A03 | black | 00- | | |
| (21) | 996 552 186 04 | defroster trim | /R | 1 | |
| | D05 | granite grey | 99 | | M010 |
| | A03 | black | 00- | | |
| 21 | 996 552 988 05 | defroster trim<br>leather | /L 01- | 1 | XV1 |
| | VRK | black | | | |
| | C51 | graphite grey | | | |
| | S31 | savanna | | | |
| | J31 | nephrite green | | | |
| | M31 | boxster red | | | |
| | G11 | metropole blue | | | |
| | D12 | dark grey | | | |
| | T12 | brown/natural | | | |
| | P12 | cinnamon brown | | | |
| (21) | 996 552 989 05 | defroster trim<br>leather | /R 01- | 1 | XV1 |
| | VRK | black | | | |
| | C51 | graphite grey | | | |
| | S31 | savanna | | | |
| | J31 | nephrite green | | | |
| | M31 | boxster red | | | |
| | G11 | metropole blue | | | |
| | D12 | dark grey | | | |
| | T12 | brown/natural | | | |
| | P12 | cinnamon brown | | | |
| 22 | 999 507 531 02 | clamp<br>1,8-2,8 | -98 | 2 | |
| 22 | 999 507 685 02 | clamp<br>1,5-2,0 | 99- | 2 | |
| 23 | 996 552 181 02 | cover<br>F >>98VS6 04498 | | 1 | |
| | B12 | black-grey | | | |
| (23) | 996 552 181 03 | cover<br>F >>98VS6 04498 | | 1 | M573 |
| | B12 | black-grey | | | |
| (23) | 986 552 181 00 | cover<br>F 98VS6 04499>> | -98 | 1 | |
| | B12 | black-grey | | | |
| (23) | 986 552 181 00 | cover | 99 | 1 | M011/012/016 |

| Pos | Part Number | Description | Remark | Qty | Model |
|---|---|---|---|---|---|
| | B12 | black-grey | | | |
| (23) | 996 552 181 04 | cover | | 1 | |
| | D05 | granite grey | 99 | | M010 |
| | A03 | black | 00- | | |
| (23) | 996 552 990 02 | cover<br>light<br>leather | 01- | 1 | XV1 |
| | VRK | black | | | |
| | C51 | graphite grey | | | |
| | S31 | savanna | | | |
| | J31 | nephrite green | | | |
| | M31 | boxster red | | | |
| | G11 | metropole blue | | | |
| | D12 | dark grey | | | |
| | T12 | brown/natural | | | |
| | P12 | cinnamon brown | | | |
| 24 | 996 552 617 03 | support | /LL | 1 | |
| (24) | 996 552 618 02 | support<br>instrument<br>wiring harness | /RL | 1 | |
| -- | 999 591 883 02 | speed nut<br>4,8 | | 2 | |
| 25 | 900 380 015 09 | hexagon nut<br>M 6 | | 2 | |
| 26 | 986 552 055 00 | cover<br>instruments | /LL 97 | 1 | |
| | EJN | black | | | |
| | EJO | graphite grey | | | |
| | EJP | savanna | | | |
| (26) | 986 552 056 00 | cover<br>leatherette<br>instruments | /RL 97 | 1 | |
| | EJN | black | | | |
| | EJO | graphite grey | | | |
| | EJP | savanna | | | |
| 26 | 986 552 055 02 | cover<br>leatherette<br>dashboard trim<br>black-grey | /LL98-99 | 1 | M011/016 |
| | DHN | black | | | |
| | DHO | graphite grey | | | |
| | DHP | savanna | | | |
| | EJQ | metropole blue | | | |
| (26) | 986 552 056 02 | cover<br>leatherette<br>dashboard trim<br>black-grey | /RL98-99 | 1 | M011/016 |
| | DHN | black | | | |
| | DHO | graphite grey | | | |
| | DHP | savanna | | | |
| | EJQ | metropole blue | | | |
| 26 | 986 552 055 03 | cover<br>leatherette<br>dashboard trim<br>granite grey | /LL 99 | 1 | M010 |
| | DKO | black | | | |
| | DKP | graphite grey | | | |
| | DKQ | savanna | | | |
| | DKR | metropole blue | | | |
| (26) | 986 552 056 03 | cover<br>leatherette<br>dashboard trim<br>granite grey | /RL 99 | 1 | M010 |
| | DKO | black | | | |
| | DKP | graphite grey | | | |
| | DKQ | savanna | | | |
| | DKR | metropole blue | | | |

| Pos | Part Number | Description | Remark | Qty | Model |
|---|---|---|---|---|---|
| 26 | 986 552 055 03 | cover<br>leatherette<br>dashboard trim<br>black | /LL 00- | 1 | M016 |
| | EUD | black | | | |
| | EVC | graphite grey | | | |
| | EVG | savanna | | | |
| | EVH | metropole blue | | | |
| | FES | nephrite green | | | |
| (26) | 986 552 056 03 | cover<br>leatherette<br>dashboard trim<br>black | /RL 00- | 1 | M016 |
| | EUD | black | | | |
| | EVC | graphite grey | | | |
| | EVG | savanna | | | |
| | EVH | metropole blue | | | |
| | FES | nephrite green | | | |
| 26 | 986 552 035 02 | cover<br>instruments<br>leather<br>black<br>dashboard trim<br>lacquered | /LL 98- | 1 | M012 |
| | DKN | metal grey | | | M012 |
| (26) | 986 552 036 02 | cover<br>instruments<br>leather<br>black<br>dashboard trim<br>lacquered | /RL 98- | 1 | M012 |
| | DKN | metal grey | | | M012 |
| 26 | 986 552 035 02 | cover<br>instruments<br>leather/<br>dashboard trim<br>granite grey<br>lacquered | /LL 99 | 1 | M010 |
| | DKG | black | | | |
| | DKH | graphite grey | | | |
| | DKJ | savanna | | | |
| | DKK | metropole blue | | | |
| | DKL | nephrite green | | | |
| | DKM | boxster red | | | |
| (26) | 986 552 036 02 | cover<br>instruments<br>leather/<br>dashboard trim<br>granite grey<br>lacquered | /RL 99 | 1 | M010 |
| | DKG | black | | | |
| | DKH | graphite grey | | | |
| | DKJ | savanna | | | |
| | DKK | metropole blue | | | |
| | DKL | nephrite green | | | |
| | DKM | boxster red | | | |
| 26 | 986 552 035 00 | cover<br>instruments<br>leather<br>dashboard trim<br>black-grey | /LL 97 | 1 | |
| | EBG | black | | | |
| | EBH | graphite grey | | | |
| | EBJ | savanna | | | |
| | EBL | boxster red | | | |
| | EBK | nephrite green | | | |
| (26) | 986 552 036 00 | cover<br>instruments<br>leather<br>dashboard trim<br>black-grey | /RL 97 | 1 | |
| | EBG | black | | | |
| | EBH | graphite grey | | | |
| | EBJ | savanna | | | |

| Pos | Part Number | Description | Remark | Qty | Model |
|---|---|---|---|---|---|
| | EBL | boxster red | | | |
| | EBK | nephrite green | | | |
| 26 | 986 552 035 00 | cover<br>instruments<br>leather<br>dashboard trim<br>black-grey | /LL98-99 | 1 | M016 |
| | EBG | black | | | |
| | EBH | graphite grey | | | |
| | EBJ | savanna | | | |
| | EBL | boxster red | | | |
| | EBK | nephrite green | | | |
| | DKF | metropole blue | 98- | | |
| (26) | 986 552 036 00 | cover<br>instruments<br>leather<br>dashboard trim<br>black-grey | /RL98-99 | 1 | M016 |
| | EBG | black | | | |
| | EBH | graphite grey | | | |
| | EBJ | savanna | | | |
| | EBL | boxster red | | | |
| | EBK | nephrite green | | | |
| | DKF | metropole blue | 98- | | |
| 26 | 986 552 035 02 | cover<br>instruments<br>leather/<br>dashboard trim<br>black | /LL 00- | 1 | M016 |
| | EQH | black | | | |
| | EQJ | graphite grey | | | |
| | EQK | savanna | | | |
| | EQL | metropole blue | | | |
| | EQM | nephrite green | -03 | | |
| | EQN | boxster red | | | |
| | VSE | dark grey | | | |
| | VSF | brown/natural | | | |
| | FER | cinnamon brown | 01- | | |
| (26) | 986 552 036 02 | cover<br>instruments<br>leather/<br>dashboard trim<br>black | /RL 00- | 1 | M016 |
| | EQH | black | | | |
| | EQJ | graphite grey | | | |
| | EQK | savanna | | | |
| | EQL | metropole blue | | | |
| | EQM | nephrite green | -03 | | |
| | EQN | boxster red | | | |
| | VSE | dark grey | | | |
| | VSF | brown/natural | | | |
| | FER | cinnamon brown | 01- | | |
| 26 | 986 552 035 03 | cover<br>instruments<br>leather/<br>gt silver metallic | /LL 04 | 1 | M091 |
| | FGF | cocoa | | | |
| | FGG | dark grey/natural | | | |
| (26) | 986 552 036 03 | cover<br>instruments<br>leather/<br>gt silver metallic | /RL 04 | 1 | M091 |
| | FGF | cocoa | | | |
| | FGG | dark grey/natural | | | |
| 27 | 986 552 221 03 | cover<br>lower part<br>lacquered | /LL 98- | 1 | |
| | D05 | granite grey | 99 | | M010 |
| | C02 | metal grey | 98- | | M012 |
| | A03 | black | 00- | | M016 |

| Pos | Part Number | Description | Remark | Qty | Model |
|---|---|---|---|---|---|
| (27) | 986 552 222 02 | cover<br>lower part<br>lacquered | /RL 98- | 1 | |
| | D05 | granite grey | 99 | | M010 |
| | C02 | metal grey | 98- | | M012 |
| | A03 | black | 00- | | M016 |
| 27 | 986 552 221 04 | cover<br>lower part<br>lacquered | /LL 04 | 1 | M091 |
| | M7Z | gt silver metallic | | | |
| (27) | 986 552 222 03 | cover<br>lower part<br>lacquered | /RL 04 | 1 | M091 |
| | M7Z | gt silver metallic | | | |
| 28 | 999 591 349 02 | speed nut<br>3,5 | | 11 | |
| 29 | 999 073 153 07 | tapping screw<br>3,5 X 14 | | 11 | |
| 30 | 999 920 012 40 | plug-in nut<br>5,0 X 3,5 X 8 | | 2 | |
| 32 | 999 919 188 09 | oval-head screw<br>5,0 X 30 | -00 | 2 | |
| (32) | 999 073 220 09 | tapping screw<br>4,8 X 25 | 01- | 2 | |
| 33 | 996 552 625 01 | cover<br>microphone | /LL 97 | 1 | |
| | B12 | black-grey | | | |
| (33) | 996 552 626 01 | cover<br>microphone | /RL 97 | 1 | |
| | B12 | black-grey | | | |
| 33 | 996 552 625 01 | cover<br>microphone | /LL98-99 | 1 | M011/016 |
| | B12 | black-grey | | | |
| (33) | 996 552 626 01 | cover<br>microphone | /RL98-99 | 1 | M011/016 |
| | B12 | black-grey | | | |

| Pos | Part Number | Description | Remark | Qty | Model |
|---|---|---|---|---|---|
| 33 | 996 552 625 02 | cover<br>microphone<br>lacquered | /LL | 1 | |
| | C02 | metal grey | 98- | | M012 |
| | D05 | granite grey | 99 | | M010 |
| | A03 | black | 00- | | |
| (33) | 996 552 626 02 | cover<br>microphone<br>lacquered | /RL | 1 | |
| | C02 | metal grey | 98- | | M012 |
| | D05 | granite grey | 99 | | M010 |
| | A03 | black | 00- | | |
| 33 | 986 552 625 00 | cover<br>microphone<br>lacquered | /LL 04 | 1 | M091 |
| | M7Z | gt silver metallic | | | |
| (33) | 986 552 626 00 | cover<br>microphone<br>lacquered | /RL 04 | 1 | M091 |
| | M7Z | gt silver metallic | | | |

| Model | Year | MG | SG | Illustration | Restrictions | UPD | 18:31 | 30.07.2008 | PET |
|---|---|---|---|---|---|---|---|---|---|
| 986 | 2004 | 8 | 09 | 809-01 | | 229 | | | |

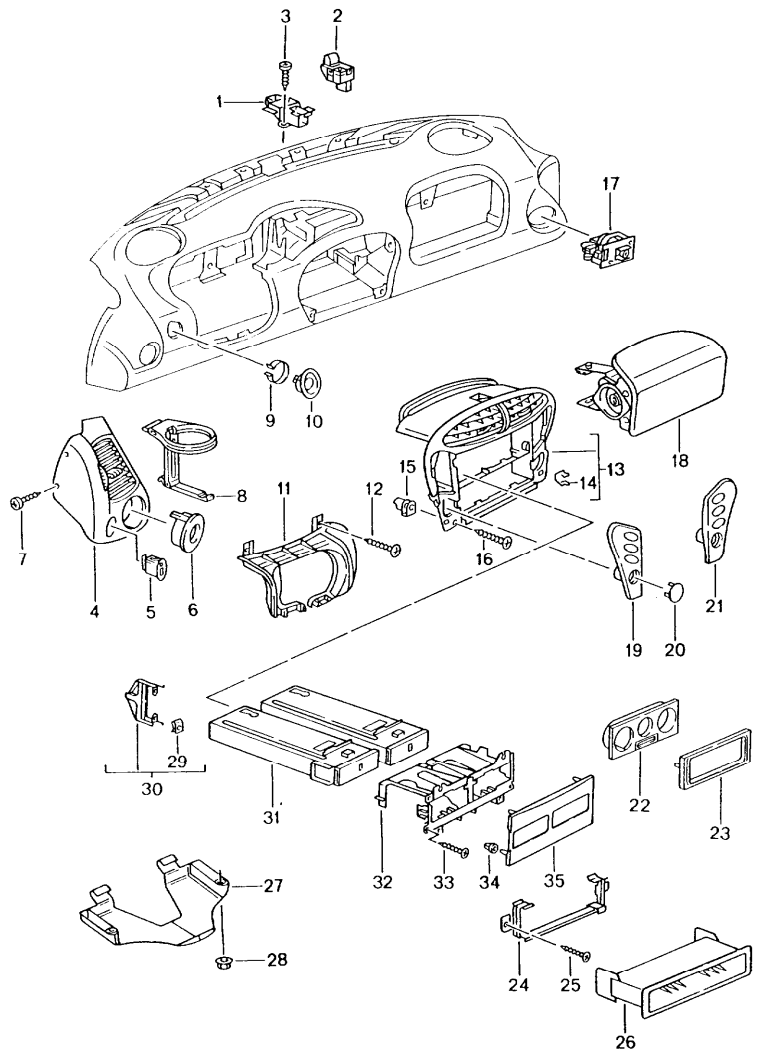


| Pos | Part Number | Description | Remark | Qty | Model |
|---|---|---|---|---|---|
| | | accessories<br>dashboard trim | -02 | | |
| 1 | 996 552 541 01 | mounting<br>light<br>F >>98VS6 04498 | | 1 | |
| 1 | 996 552 541 02 | mounting<br>light<br>F 98VS6 04499>> | | 1 | |
| 2 | 8D0 907 539 | sensor<br>F >>98VS6 04498 | | 1 | |
| 2 | 996 653 251 00 | sensor<br>F 98VS6 04499>> | | 1 | |
| 3 | 999 919 120 09 | oval-head screw<br>4,0 X 18 | | 2 | |
| 4 | 996 552 225 04 | side vent | /L -99 | 1 | M011/012/016 |
| | B12 | black-grey | | | |
| (4) | 996 552 228 04 | side vent | /R -99 | 1 | M011/012/016 |
| | B12 | black-grey | | | |
| 4 | 996 552 225 05 | side vent<br>lacquered | /L 99 | 1 | M010 |
| | D05 | granite grey | | | |
| (4) | 996 552 228 05 | side vent<br>lacquered | /R 99 | 1 | M010 |
| | D05 | granite grey | | | |
| 4 | 996 552 225 05 | side vent | /L 00- | 1 | |
| | A03 | black | | | |
| (4) | 996 552 228 05 | side vent<br>lacquered | /R 00- | 1 | |
| | A03 | black | | | |
| 4 | 996 552 984 00 | side vent | /L 01- | 1 | XNH |
| | VRK | black | | | |
| | C51 | graphite grey | | | |
| | S31 | savanna | | | |
| | G11 | metropole blue | | | |

| Pos | Part Number | Description | Remark | Qty | Model |
|---|---|---|---|---|---|
| | J31 | nephrite green | | | |
| | M31 | boxster red | | | |
| | D12 | dark grey | | | |
| | T12 | brown/natural | | | |
| | P12 | cinnamon brown | | | |
| (4) | 996 552 985 00 | side vent<br>leather | /R 01- | 1 | XNH |
| | VRK | black | | | |
| | C51 | graphite grey | | | |
| | S31 | savanna | | | |
| | G11 | metropole blue | | | |
| | J31 | nephrite green | | | |
| | M31 | boxster red | | | |
| | D12 | dark grey | | | |
| | T12 | brown/natural | | | |
| | P12 | cinnamon brown | | | |
| 4 | 996 552 984 05 | side vent<br>arctic silver<br>leather | /L 01- | 1 | XKE |
| | VRK | black | | | |
| | C51 | graphite grey | | | |
| | S31 | savanna | | | |
| | J31 | nephrite green | | | |
| | M31 | boxster red | | | |
| | G11 | metropole blue | | | |
| | D12 | dark grey | | | |
| | T12 | brown/natural | | | |
| | P12 | cinnamon brown | | | |
| (4) | 996 552 985 05 | side vent<br>arctic silver<br>leather | /R 01- | 1 | XKE |

| Pos | Part Number | Description | Remark | Qty | Model |
|---|---|---|---|---|---|
| | VRK | black | | | |
| | C51 | graphite grey | | | |
| | S31 | savanna | | | |
| | J31 | nephrite green | | | |
| | M31 | boxster red | | | |
| | G11 | metropole blue | | | |
| | D12 | dark grey | | | |
| | T12 | brown/natural | | | |
| | P12 | cinnamon brown | | | |
| 5 | 996 552 621 00 | cover | 97 | 1 | |
| | B12 | black-grey | | | |
| 5 | 996 552 621 00 | cover<br>headlight levelling system | 98-99 | 1 | M011/012/016 |
| | B12 | black-grey | | | |
| 5 | 996 552 621 01 | cover<br>headlight levelling system<br>lacquered | 99 | 1 | M010 |
| | D05 | granite grey | | | |
| 5 | 996 552 621 01 | cover<br>headlight levelling system<br>lacquered | 00- | 1 | |
| | A03 | black | | | |
| 5 | 996 552 986 00 | cover<br>headlight levelling system<br>leather | 01- | 1 | XNH |
| | A11 | black | | | |
| | C51 | graphite grey | | | |
| | S31 | savanna | | | |
| | J31 | nephrite green | | | |
| | M31 | boxster red | | | |
| | G11 | metropole blue | | | |
| | D12 | dark grey | | | |

| Pos | Part Number | Description | Remark | Qty | Model |
|---|---|---|---|---|---|
| | T12 | brown/natural | | | |
| | P12 | cinnamon brown | | | |
| 6 | 996 552 417 01 | rosette | 97 | 1 | |
| | B12 | black-grey | | | |
| 6 | 996 552 417 01 | rosette<br>interior sensor | 98-99 | 1 | M011/012/016 |
| | B12 | black-grey | | | |
| 6 | 996 552 417 02 | rosette<br>interior sensor<br>lacquered | 99 | 1 | M010 |
| | D05 | granite grey | | | |
| 6 | 996 552 417 02 | rosette<br>interior sensor<br>lacquered | 00- | 1 | |
| | A03 | black | | | |
| 6 | 996 552 987 00 | rosette<br>interior sensor<br>leather | 01- | 1 | XNH |
| | A11 | black | | | |
| | C51 | graphite grey | | | |
| | S31 | savanna | | | |
| | J31 | nephrite green | | | |
| | M31 | boxster red | | | |
| | G11 | metropole blue | | | |
| | D12 | dark grey | | | |
| | T12 | brown/natural | | | |
| | P12 | cinnamon brown | | | |
| 7 | 999 919 120 09 | oval-head screw<br>4,0 X 18 | -00 | 4 | |
| 7 | 999 073 218 09 | tapping screw<br>4,2 X 16 | 01- | 4 | |
| 8 | 986 552 183 00 | support | /L -99 | 1 | |
| | 01C | satin black | | | |

| Pos | Part Number | Description | Remark | Qty | Model |
|---|---|---|---|---|---|
| (8) | 986 552 184 00 | support<br>beverages | /R -99 | 1 | |
| | 01C | satin black | | | |
| 9 | 944 552 452 00 | clip<br>F >>98VS6 07645 | | 1 | |
| 10 | 996 552 235 02 | rosette<br>ignition starter lock | /LL 97 | 1 | |
| | B12 | black-grey | | | |
| (10) | 996 552 236 02 | rosette<br>ignition starter lock | /RL 97 | 1 | |
| | B12 | black-grey | | | |
| 10 | 996 552 235 02 | rosette<br>ignition starter lock | /LL98-99 | 1 | M011/012/016 |
| | B12 | black-grey | | | |
| (10) | 996 552 236 02 | rosette<br>ignition starter lock | /RL98-99 | 1 | M011/012/016 |
| | B12 | black-grey | | | |
| 10 | 996 552 235 03 | rosette<br>lacquered | /LL | 1 | |
| | D05 | granite grey | 99 | | M010 |
| | A03 | black | 00- | | |
| (10) | 996 552 236 03 | rosette<br>lacquered | /RL | 1 | |
| | D05 | granite grey | 99 | | M010 |
| | A03 | black | 00- | | |
| 10 | 996 552 980 00 | rosette<br>ignition starter lock<br>leather | /LL 01- | 1 | XJ4 |
| | A11 | black | | | |
| | C51 | graphite grey | | | |
| | S31 | savanna | | | |
| | G11 | metropole blue | | | |
| | J31 | nephrite green | | | |
| | M31 | boxster red | | | |

| Pos | Part Number | Description | Remark | Qty | Model |
|---|---|---|---|---|---|
| | P12 | cinnamon brown | | | |
| | D12 | dark grey/natural | | | |
| | T12 | brown/natural | | | |
| (10) | 996 552 980 01 | rosette<br>ignition starter lock<br>leather | /RL 01- | 1 | XJ4 |
| | A11 | black | | | |
| | C51 | graphite grey | | | |
| | S31 | savanna | | | |
| | G11 | metropole blue | | | |
| | J31 | nephrite green | | | |
| | M31 | boxster red | | | |
| | P12 | cinnamon brown | | | |
| | D12 | dark grey/natural | | | |
| | T12 | brown/natural | | | |
| 11 | 996 552 271 03 | cover<br>steering | | 1 | |
| | A03 | black | | | |
| | C53 | graphite grey | | | |
| | S33 | savanna | | | |
| | G13 | metropole blue | | | |
| | M33 | boxster red | | | |
| | J33 | nephrite green | | | |
| | P13 | cinnamon brown | | | |
| 11 | 986 552 988 03 | cover<br>steering<br>leather | 01- | 1 | XNS |
| | VRK | black | | | |
| | S31 | savanna | | | |
| | C51 | graphite grey | | | |
| | G11 | metropole blue | | | |
| | J31 | nephrite green | | | |
| | M31 | boxster red | | | |
| | D12 | dark grey/natural | | | |
| | T12 | brown/natural | | | |
| 12 | 999 919 123 09 | oval-head screw<br>5,0 X 20 | | 8 | |
| 13 | 986 552 131 04 | support frame | -99 | 1 | M011/016 |
| | EBO | satin black | | | |
| (13) | 986 552 131 05 | support frame | -99 | 1 | M011/016/662 |
| | EBO | satin black | | | |
| 13 | 986 552 131 08 | support frame<br>lacquered | | 1 | |
| | A03 | black | 00- | | |
| | C02 | metal grey | | | |
| | D05 | granite grey | 99 | | |
| (13) | 986 552 131 09 | support frame<br>lacquered | | 1 | M662 |
| | A03 | black | 00- | | |
| | C02 | metal grey | | | |
| | D05 | granite grey | 99 | | |
| (13) | 986 552 980 18 | support frame | 01- | 1 | XNN |
| | A11 | black | | | |
| | C51 | graphite grey | | | |
| | S31 | savanna | | | |
| | G11 | metropole blue | | | |
| | J31 | nephrite green | | | |
| | M31 | boxster red | | | |
| | D12 | dark grey | | | |
| | T12 | brown/natural | | | |

| Pos | Part Number | Description | Remark | Qty | Model |
|---|---|---|---|---|---|
| | P12 | cinnamon brown | 01 | | |
| (13) | 986 552 980 22 | support frame<br>leather | 01- | 1 | XNN/M662 |
| | A11 | black | | | |
| | C51 | graphite grey | | | |
| | S31 | savanna | | | |
| | G11 | metropole blue | | | |
| | J31 | nephrite green | | | |
| | M31 | boxster red | | | |
| | D12 | dark grey | | | |
| | T12 | brown/natural | | | |
| | P12 | cinnamon brown | 01 | | |
| (13) | 986 552 980 30 | support frame<br>rootwood<br>dark<br>lacquered | 01- | 1 | XKS |
| | 01C | satin black | | | |
| | C53 | graphite grey | | | |
| | S33 | savanna | | | |
| | G13 | metropole blue | | | |
| | J33 | nephrite green | | | |
| | M33 | boxster red | | | |
| | D12 | dark grey/natural | 00- | | |
| | T12 | brown/natural | 00- | | |
| | P13 | cinnamon brown | 01 | | |
| (13) | 986 552 980 31 | support frame<br>rootwood<br>dark<br>lacquered | 01- | 1 | XKS/M662 |
| | 01C | satin black | | | |
| | C53 | graphite grey | | | |
| | S33 | savanna | | | |

| Pos | Part Number | Description | Remark | Qty | Model |
|---|---|---|---|---|---|
| | G13 | metropole blue | | | |
| | J33 | nephrite green | | | |
| | M33 | boxster red | | | |
| | D12 | dark grey/natural | 00- | | |
| | T12 | brown/natural | 00- | | |
| | P13 | cinnamon brown | 01 | | |
| (13) | 986 552 980 20 | support frame<br>carbon | 01 | 1 | XNR |
| | 01C | satin black | | | |
| | C53 | graphite grey | | | |
| | S33 | savanna | | | |
| | G13 | metropole blue | | | |
| | J33 | nephrite green | | | |
| | M33 | boxster red | | | |
| | D12 | dark grey/natural | 00- | | |
| | T12 | brown/natural | 00- | | |
| | P13 | cinnamon brown | 01 | | |
| (13) | 986 552 980 24 | support frame<br>carbon | 01 | 1 | XNR/M662 |
| | 01C | satin black | | | |
| | C53 | graphite grey | | | |
| | S33 | savanna | | | |
| | G13 | metropole blue | | | |
| | J33 | nephrite green | | | |
| | M33 | boxster red | | | |
| | D12 | dark grey/natural | 00- | | |
| | T12 | brown/natural | 00- | | |
| | P13 | cinnamon brown | 01 | | |
| 13 | 986 552 980 34 | support frame | 01 | 1 | XKW |
| | 92T | arctic silver | | | |

| Pos | Part Number | Description | Remark | Qty | Model |
|---|---|---|---|---|---|
| (13) | 986 552 980 35 | support frame | 01 | 1 | XKW/M662 |
| | 92T | arctic silver | | | |
| -- | 996 572 971 00 | foam part | | 1 | |
| 14 | 999 507 533 02 | clamp<br>8/2,5 | | 4 | |
| (15) | 999 920 015 40 | plug-in nut<br>4,0 X 4,0 X 9 | -99 | 11 | |
| 15 | 999 920 012 40 | plug-in nut<br>5,0 X 3,5 X 8 | | 4 | |
| (15) | 999 507 744 01 | speed nut<br>4,2 | -00 | 18 | |
| (15) | 999 507 768 02 | speed nut<br>4,2 | 01- | 16 | |
| (15) | 999 507 767 02 | speed nut<br>4,2 | 01- | 2 | |
| 16 | 999 919 123 09 | oval-head screw<br>5,0 X 20 | -00 | 4 | |
| 16 | 999 073 218 09 | tapping screw<br>4,2 X 16 | 01- | 4 | |
| 17 | 996 653 241 00 | interior sensor<br>side vent | | 1 | M573 |
| 18 | --- --- --- -- | see group<br>4/03/06 | | 1 | |
| 19 | 986 552 233 00 | trim for switch | /L 97 | 1 | |
| | B12 | black-grey | | | |
| 19 | 986 552 233 00 | trim for switch | /L 98-99 | 1 | M011/016 |
| | B12 | black-grey | | | |
| 19 | 986 552 233 01 | trim for switch<br>lacquered | /L | 1 | |
| | C02 | metal grey | 98- | | M012 |
| | D05 | granite grey | 99 | | M010 |
| | A03 | black | 00- | | |
| 19 | 986 552 981 04 | trim for switch<br>arctic silver | /L 01- | 1 | XKW |
| 20 | 986 552 543 00 | cover | 97 | 1 | |
| | B12 | black-grey | | | |
| 20 | 986 552 543 00 | cover<br>switch | 98-99 | 1 | M011/016 |
| | B12 | black-grey | | | |
| 20 | 986 552 543 01 | cover<br>switch | | 1 | |
| | D05 | granite grey | 99 | | M010 |
| | C02 | metal grey | 98- | | M012 |
| | A03 | black | 00- | | |
| 20 | 986 552 983 05 | cover<br>switch<br>arctic silver | 01- | 1 | XKW |
| 21 | 986 552 234 00 | trim for switch | /R 97 | 1 | |
| | B12 | black-grey | | | |
| 21 | 986 552 234 00 | trim for switch | /R 98-99 | 1 | M011/016 |
| | B12 | black-grey | | | |
| 21 | 986 552 234 01 | trim for switch<br>lacquered | /R | 1 | |
| | C02 | metal grey | 98- | | M012 |
| | D05 | granite grey | 99 | | M010 |
| | A03 | black | 00- | | |
| 21 | 986 552 982 04 | trim for switch<br>arctic silver | /R 01- | 1 | XKW |
| 22 | 996 552 153 01 | support frame<br>heating | | 1 | |
| | 01C | satin black | | | |
| 22 | 996 552 991 00 | cover<br>heating<br>leather | 01- | 1 | XKW/XNN/M574 |
| | A11 | black | | | |
| | C51 | graphite grey | | | |
| | S31 | savanna | | | |
| | J31 | nephrite green | | | |

| Pos | Part Number | Description | Remark | Qty | Model |
|---|---|---|---|---|---|
| | M31 | boxster red | | | |
| | G11 | metropole blue | | | |
| | D12 | dark grey | | | |
| | T12 | brown/natural | | | |
| | P12 | cinnamon brown | | | |
| 23 | 996 552 677 00 | frame<br>air-conditioning switch | | 1 | M573 |
| | 01C | satin black | | | |
| 24 | 996 552 673 02 | retaining bar<br>radio | | 1 | |
| (24) | 996 552 653 01 | retaining bar | 98- | 1 | M662 |
| 25 | 999 919 123 09 | oval-head screw<br>5,0 X 20 | -00 | 2 | |
| 25 | 999 073 218 09 | tapping screw<br>4,2 X 16 | 01- | 2 | |
| 26 | 996 552 253 01 | shelf<br>instead of<br>radio | | 1 | |
| | 01C | satin black | | | |
| 27 | 996 552 173 00 | shelf<br>driver's side | 98-99 | 1 | |
| | 01C | satin black | | | |
| 27 | 996 552 173 01 | shelf<br>driver's side | 00- | 1 | |
| | A03 | black | | | |
| 28 | 999 507 616 40 | expander nut<br>6,2/5,8-10 | 98 | 2 | |
| (28) | 999 591 712 40 | expansion rivet<br>6,0 X 12,0 | 99- | 2 | |

| Pos | Part Number | Description | Remark | Qty | Model |
|---|---|---|---|---|---|

| Model | Year | MG | SG | Illustration | Restrictions | UPD | 18:32 | 30.07.2008 | PORSCHE PET PORSCHE |
|---|---|---|---|---|---|---|---|---|---|
| 986 | 2004 | 8 | 09 | 809-02 | | 229 | | | |

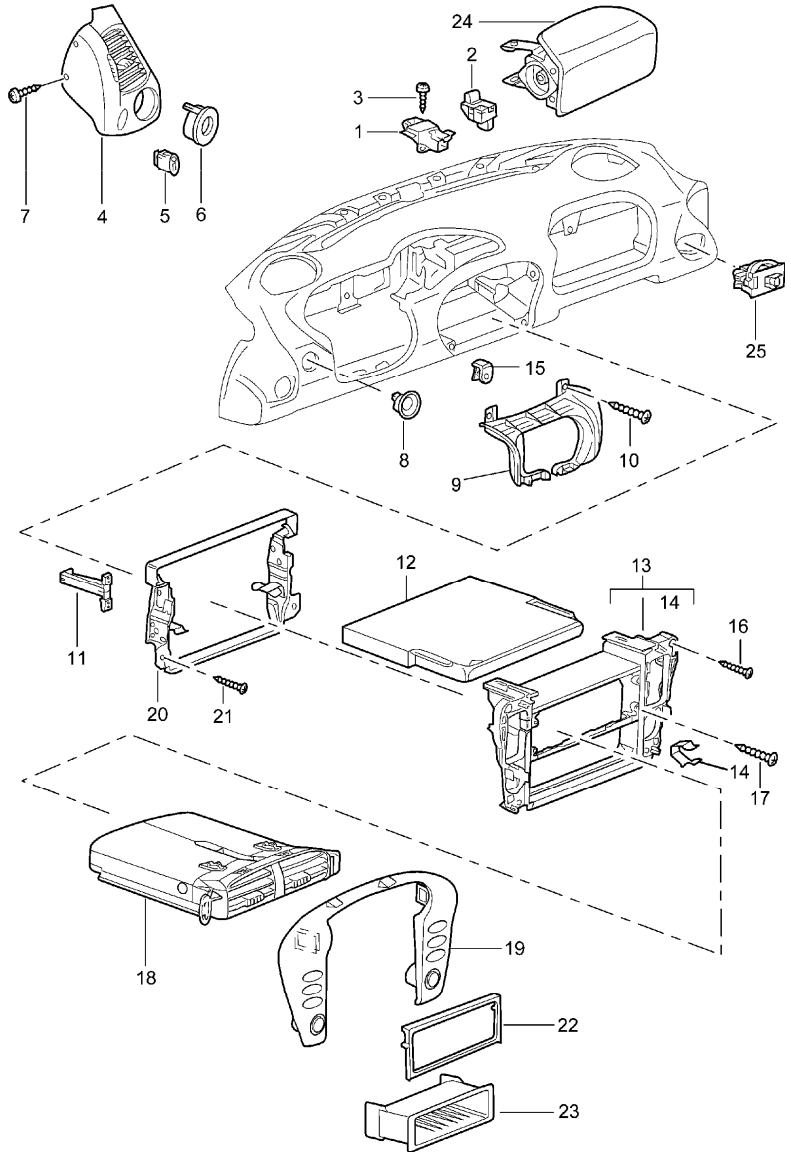


| Pos | Part Number | Description | Remark | Qty | Model |
|---|---|---|---|---|---|
| | | accessories<br>dashboard trim | 03- | | |
| 1 | 996 552 541 02 | mounting<br>light | | 1 | |
| 2 | 996 653 251 00 | sensor | | 1 | M534/535 |
| 3 | 999 919 120 09 | oval-head screw<br>4,0 X 18 | | 2 | |
| 4 | 996 552 225 06 | side vent<br>lacquered | /L | 1 | |
| | A03 | black | | | |
| (4) | 996 552 228 06 | side vent<br>lacquered | /R | 1 | |
| | A03 | black | | | |
| 4 | 996 552 984 00 | side vent<br>leather | /L | 1 | XNH |
| | VRK | black | | | |
| | C51 | graphite grey | | | |
| | S31 | savanna | | | |
| | G11 | metropole blue | | | |
| | J31 | nephrite green | | | |
| | M31 | boxster red | | | |
| | D12 | dark grey | | | |
| | T12 | brown/natural | | | |
| | P12 | cinnamon brown | | | |
| (4) | 996 552 985 00 | side vent<br>leather | /R | 1 | XNH |
| | VRK | black | | | |
| | C51 | graphite grey | | | |
| | S31 | savanna | | | |
| | G11 | metropole blue | | | |
| | J31 | nephrite green | | | |
| | M31 | boxster red | | | |

| Pos | Part Number | Description | Remark | Qty | Model |
|---|---|---|---|---|---|
| | D12 | dark grey | | | |
| | T12 | brown/natural | | | |
| | P12 | cinnamon brown | | | |
| 4 | 996 552 984 05 | side vent<br>arctic silver<br>leather | /L | 1 | XKE |
| | VRK | black | | | |
| | C51 | graphite grey | | | |
| | S31 | savanna | | | |
| | J31 | nephrite green | | | |
| | M31 | boxster red | | | |
| | G11 | metropole blue | | | |
| | D12 | dark grey | | | |
| | T12 | brown/natural | | | |
| | P12 | cinnamon brown | | | |
| (4) | 996 552 985 05 | side vent<br>arctic silver<br>leather | /R | 1 | XKE |
| | VRK | black | | | |
| | C51 | graphite grey | | | |
| | S31 | savanna | | | |
| | J31 | nephrite green | | | |
| | M31 | boxster red | | | |
| | G11 | metropole blue | | | |
| | D12 | dark grey | | | |
| | T12 | brown/natural | | | |
| | P12 | cinnamon brown | | | |
| 4 | 996 552 984 07 | side vent<br>aluminium look<br>leather | /L 03- | 1 | XCC |
| | VRK | black | | | |
| | C51 | graphite grey | | | |
| | S31 | savanna | | | |
| | G11 | metropole blue | | | |
| | J31 | nephrite green | | | |
| | M31 | boxster red | | | |
| | P12 | cinnamon brown | | | |
| | D12 | dark grey/natural | | | |
| | T12 | brown/natural | | | |
| (4) | 996 552 985 07 | side vent<br>aluminium look<br>leather | /R 03- | 1 | XCC |
| | VRK | black | | | |
| | C51 | graphite grey | | | |
| | S31 | savanna | | | |
| | G11 | metropole blue | | | |
| | J31 | nephrite green | | | |
| | M31 | boxster red | | | |
| | P12 | cinnamon brown | | | |
| | D12 | dark grey/natural | | | |
| | T12 | brown/natural | | | |
| 5 | 996 552 621 01 | cover<br>headlight levelling system<br>lacquered | | 1 | |
| | A03 | black | | | |
| 5 | 996 552 986 00 | cover<br>headlight levelling system<br>leather | | 1 | XNU |
| | A11 | black | | | |
| | C51 | graphite grey | | | |
| | S31 | savanna | | | |
| | J31 | nephrite green | | | |
| | M31 | boxster red | | | |
| | G11 | metropole blue | | | |

| Pos | Part Number | Description | Remark | Qty | Model |
|---|---|---|---|---|---|
| | D12 | dark grey | | | |
| | T12 | brown/natural | | | |
| | P12 | cinnamon brown | | | |
| 6 | 996 552 417 02 | rosette<br>interior sensor<br>lacquered | | 1 | |
| | A03 | black | | | |
| 6 | 996 552 987 00 | rosette<br>interior sensor<br>leather | | 1 | XNH/XKE/XCC |
| | A11 | black | | | |
| | C51 | graphite grey | | | |
| | S31 | savanna | | | |
| | J31 | nephrite green | | | |
| | M31 | boxster red | | | |
| | G11 | metropole blue | | | |
| | D12 | dark grey | | | |
| | T12 | brown/natural | | | |
| | P12 | cinnamon brown | | | |
| 7 | 999 073 218 09 | tapping screw<br>4,2 X 16 | | 4 | |
| 8 | 996 552 235 03 | rosette<br>ignition starter lock | /LL | 1 | |
| | A03 | black | | | |
| (8) | 996 552 236 03 | rosette<br>ignition starter lock | /RL | 1 | |
| | A03 | black | | | |
| 8 | 996 552 980 00 | rosette<br>ignition starter lock<br>leather | /LL | 1 | XJ4 |
| | A11 | black | | | |
| | C51 | graphite grey | | | |
| | S31 | savanna | | | |

| Pos | Part Number | Description | Remark | Qty | Model |
|---|---|---|---|---|---|
| | G11 | metropole blue | | | |
| | J31 | nephrite green | | | |
| | M31 | boxster red | | | |
| | P12 | cinnamon brown | | | |
| | D12 | dark grey/natural | | | |
| | T12 | brown/natural | | | |
| (8) | 996 552 980 01 | rosette<br>ignition starter lock<br>leather | /RL | 1 | XJ4 |
| | A11 | black | | | |
| | C51 | graphite grey | | | |
| | S31 | savanna | | | |
| | G11 | metropole blue | | | |
| | J31 | nephrite green | | | |
| | M31 | boxster red | | | |
| | P12 | cinnamon brown | | | |
| | D12 | dark grey/natural | | | |
| | T12 | brown/natural | | | |
| 9 | 996 552 271 03 | cover<br>steering | | 1 | |
| | A03 | black | | | |
| | C53 | graphite grey | | | |
| | S33 | savanna | | | |
| | G13 | metropole blue | | | |
| | J33 | nephrite green | | | |
| | M33 | boxster red | | | |
| | P13 | cinnamon brown | | | |
| 9 | 986 552 988 03 | cover<br>steering<br>leather | | 1 | XNS |
| | VRK | black | | | |

| Pos | Part Number | Description | Remark | Qty | Model |
|---|---|---|---|---|---|
| | S31 | savanna | | | |
| | G11 | metropole blue | | | |
| | J31 | nephrite green | | | |
| | M31 | boxster red | | | |
| | D12 | dark grey/natural | | | |
| | T12 | brown/natural | | | |
| | C51 | graphite grey | | | |
| | P12 | cinnamon brown | | | |
| 10 | 999 919 123 09 | oval-head screw 5,0 X 20 | | 8 | |
| 12 | 996 552 183 00 | support beverages | /LL | 1 | |
| | 01C | satin black | | | |
| (12) | 996 552 184 00 | support beverages | /RL | 1 | |
| | 01C | satin black | | | |
| 12 | 996 552 958 00 | support beverages leather | /LL | 1 | XCD/XKS/XNR |
| | A11 | black | | | |
| | C51 | graphite grey | | | |
| | S31 | savanna | | | |
| | G11 | metropole blue | | | |
| | J31 | nephrite green | | | |
| | M31 | boxster red | | | |
| | P12 | cinnamon brown | | | |
| | D12 | dark grey/natural | | | |
| | T12 | brown/natural | | | |
| (12) | 996 552 958 01 | support beverages leather | /RL | 1 | XCD/XKS/XNR |
| | A11 | black | | | |
| | C51 | graphite grey | | | |
| | S31 | savanna | | | |
| | G11 | metropole blue | | | |
| | J31 | nephrite green | | | |
| | M31 | boxster red | | | |
| | P12 | cinnamon brown | | | |
| | D12 | dark grey/natural | | | |
| | T12 | brown/natural | | | |
| 13 | 996 552 231 11 | support frame | | 1 | |
| | 01C | satin black | | | |
| (13) | 996 552 231 12 | support frame | | 1 | M665 |
| | 01C | satin black | | | |
| 13 | 996 552 969 25 | support frame leather | | 1 | XNN |
| | A11 | black | | | |
| | C51 | graphite grey | | | |
| | S31 | savanna | | | |
| | G11 | metropole blue | | | |
| | J31 | nephrite green | 03 | | |
| | M31 | boxster red | | | |
| | D12 | dark grey | | | |
| | T12 | brown/natural | | | |
| | P12 | cinnamon brown | | | |
| (13) | 996 552 969 26 | support frame leather | | 1 | XNN/M665 |
| | A11 | black | | | |
| | C51 | graphite grey | | | |
| | S31 | savanna | | | |
| | G11 | metropole blue | | | |
| | J31 | nephrite green | 03 | | |

| Pos | Part Number | Description | Remark | Qty | Model |
|---|---|---|---|---|---|
| | M31 | boxster red | | | |
| | D12 | dark grey | | | |
| | T12 | brown/natural | | | |
| | P12 | cinnamon brown | | | |
| 13 | 996 552 969 31 | support frame<br>rootwood<br>dark | 03- | 1 | XKS |
| (13) | 996 552 969 32 | support frame<br>rootwood<br>dark | 03- | 1 | XKS/665 |
| 13 | 996 552 969 34 | support frame<br>carbon | 03- | 1 | XNR |
| (13) | 996 552 969 35 | support frame<br>carbon | 03- | 1 | XNR/665 |
| 14 | 999 507 533 02 | clamp<br>8/2,5 | | 4 | |
| 15 | 999 507 768 02 | speed nut<br>4,2 | | 16 | |
| (15) | 999 507 767 02 | speed nut<br>4,2 | | 2 | |
| 16 | 999 073 218 09 | tapping screw<br>4,2 X 16 | | 4 | |
| 17 | 900 143 076 09 | tapping screw<br>4,2 X 25 | | 2 | M573 |
| 18 | 996 552 263 01 | centre nozzle | | 1 | |
| | 01C | satin black | | | |
| 18 | 996 552 950 00 | centre nozzle<br>leather | | 1 | XKS/XNN/XNR |
| | A11 | black | | | |
| | C51 | graphite grey | | | |
| | S31 | savanna | | | |
| | G11 | metropole blue | | | |
| | J31 | nephrite green | | | |
| | M31 | boxster red | | | |
| | P12 | cinnamon brown | | | |
| | D12 | dark grey/natural | | | |
| | T12 | brown/natural | | | |
| 18 | 996 552 951 00 | centre nozzle<br>aluminium look | | 1 | XCD |
| | A11 | black | | | |
| | C51 | graphite grey | | | |
| | S31 | savanna | | | |
| | G11 | metropole blue | | | |
| | J31 | nephrite green | | | |
| | M31 | boxster red | | | |
| | P12 | cinnamon brown | | | |
| | D12 | dark grey/natural | | | |
| | T12 | brown/natural | | | |
| 19 | 996 552 233 06 | trim for switch<br>lacquered | | 1 | |
| | A03 | black | | | |
| | C02 | metal grey | | | M012 |
| 19 | 986 552 233 02 | trim for switch<br>lacquered | 04 | 1 | M091 |
| | M7Z | gt silver metallic | | | |
| 19 | 996 552 967 08 | trim for switch<br>leather | | 1 | XNN/XCD |
| | A11 | black | | | |
| | C51 | graphite grey | | | |
| | S31 | savanna | | | |
| | G11 | metropole blue | | | |
| | J31 | nephrite green | | | |
| | M31 | boxster red | | | |
| | D12 | dark grey | | | |
| | T12 | brown/natural | | | |
| | P12 | cinnamon brown | | | |

| Pos | Part Number | Description | Remark | Qty | Model |
|---|---|---|---|---|---|
| 19 | 996 552 967 09 | trim for switch<br>rootwood<br>light | | 1 | XKR |
| 19 | 996 552 967 10 | trim for switch<br>rootwood<br>dark | | 1 | XKS |
| 19 | 996 552 967 11 | trim for switch<br>carbon | | 1 | XNR |
| 19 | 996 552 967 13 | trim for switch<br>arctic silver | | 1 | XKW |
| 20 | 996 552 673 03 | retaining bar | | 1 | |
| (20) | 996 552 653 02 | retaining bar | | 1 | M665 |
| 21 | 999 073 218 09 | tapping screw<br>4,2 X 16 | | 2 | |
| 22 | 986 552 153 00 | frame | | 1 | M574 |
| | 01C | satin black | | | |
| 22 | 996 552 677 01 | frame | | 1 | M573 |
| | 01C | satin black | | | |
| 23 | 996 552 253 01 | shelf<br>instead of<br>radio | | 1 | |
| | 01C | satin black | | | |
| 23 | 996 552 994 01 | shelf<br>leather | | 1 | XMF |
| | A11 | black | | | |
| | C51 | graphite grey | | | |
| | S31 | savanna | | | |
| | J31 | nephrite green | | | |
| | M31 | boxster red | | | |
| | G11 | metropole blue | | | |
| | D12 | dark grey | | | |
| | T12 | brown/natural | | | |
| | P12 | cinnamon brown | | | |

| Pos | Part Number | Description | Remark | Qty | Model |
|---|---|---|---|---|---|
| 24 | --- --- --- -- | see group<br>4/03/06 | | 1 | |
| 25 | 996 653 241 00 | interior sensor | | 1 | |

| Model | Year | MG | SG | Illustration | Restrictions | UPD | 18:32 | 30.07.2008 | PET |
|---|---|---|---|---|---|---|---|---|---|
| 986 | 2004 | 8 | 09 | 809-03 | | 229 | | | |

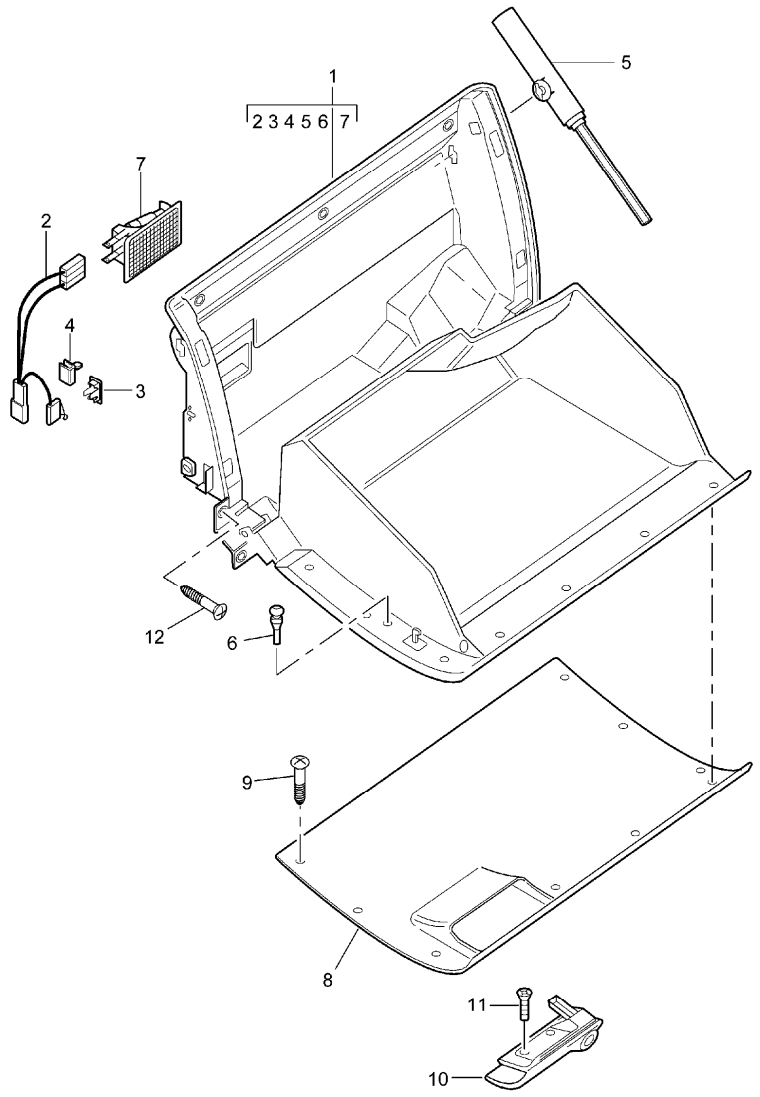


| Pos | Part Number | Description | Remark | Qty | Model |
|---|---|---|---|---|---|
| | | glove compartment | 03- | | |
| 1 | 996 552 119 00 | glove compartment | /LL | 1 | |
| | 01C | satin black | | | |
| (1) | 996 552 120 00 | glove compartment | /RL | 1 | |
| | 01C | satin black | | | |
| 2 | 996 622 501 00 | wiring harness | | 1 | |
| 3 | 999 650 564 40 | clip<br>for<br>wiring harness<br>microswitch | | 1 | |
| 4 | 999 650 565 40 | clip<br>for<br>wiring harness | | 1 | |
| 5 | 996 552 779 00 | damper | | 2 | |
| 6 | 999 703 491 50 | buffer<br>7 X 9,5 X 19,5 | | 2 | |
| 7 | 928 632 101 00 | glove compartment light | | 1 | |
| 8 | 996 552 133 00 | glove compartment cover<br>leatherette | /LL | 1 | M016 |
| | A12 | black | | | |
| | C52 | graphite grey | | | |
| | S32 | savanna | | | |
| | G12 | metropole blue | | | |
| | J32 | nephrite green | | | |
| (8) | 996 552 134 00 | glove compartment cover<br>leatherette | /RL | 1 | M016 |
| | A12 | black | | | |
| | C52 | graphite grey | | | |
| | S32 | savanna | | | |
| | G12 | metropole blue | | | |
| | J32 | nephrite green | | | |
| 8 | 996 552 133 01 | glove compartment cover<br>leather | /LL | 1 | M981 |

| Pos | Part Number | Description | Remark | Qty | Model |
|---|---|---|---|---|---|
| | A11 | black | | | |
| | C51 | graphite grey | | | |
| | S31 | savanna | | | |
| | G11 | metropole blue | | | |
| | J31 | nephrite green | 03 | | |
| | M31 | boxster red | | | |
| | P12 | cinnamon brown | | | |
| | D12 | dark grey | | | |
| | T12 | brown/natural | | | |
| | 9V6 | cocoa | 04- | | |
| (8) | 996 552 134 01 | glove compartment cover<br>leather | /RL | 1 | M981 |
| | A11 | black | | | |
| | C51 | graphite grey | | | |
| | S31 | savanna | | | |
| | G11 | metropole blue | | | |
| | J31 | nephrite green | 03 | | |
| | M31 | boxster red | | | |
| | P12 | cinnamon brown | | | |
| | D12 | dark grey | | | |
| | T12 | brown/natural | | | |
| | 9V6 | cocoa | 04- | | |
| 9 | 999 073 308 07 | tapping screw<br>3,5 X 12 | | 11 | |
| 10 | 996 552 349 01 | handle | /LL | 1 | |
| | V03 | silver | | | |
| (10) | 996 552 350 01 | handle | /RL | 1 | |
| | V03 | silver | | | |
| -- | 996 552 915 00 | lock cylinder<br>state lock number | | 1 | |

| Pos | Part Number | Description | Remark | Qty | Model |
|---|---|---|---|---|---|
| 11 | 999 073 240 02 | screw<br>M 4 X 10 | | 2 | |
| 12 | 999 073 169 07 | tapping screw<br>4,8 X 16 | | 7 | |
| 13 | 996 552 879 00 | adapter<br>for<br>damper | 03- | 2 | |

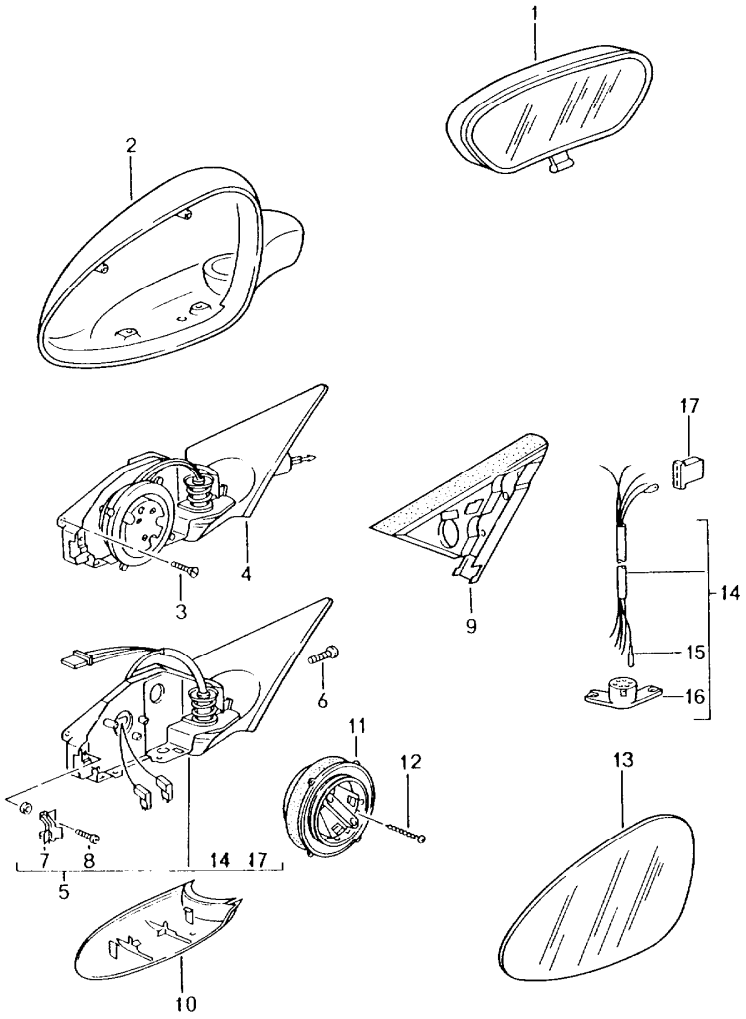


| Pos | Part Number | Description | Remark | Qty | Model |
|---|---|---|---|---|---|
| | | interior mirror<br>door mirror | | | |
| 1 | 996 731 511 00 | interior mirror | | 1 | |
| | 01C | satin black | | | |
| (1) | 996 731 511 02 | interior mirror | 01- | 1 | M265 |
| | 01C | satin black | | | |
| - | 996 731 811 01 | cover | /L 01- | 1 | M265 |
| | 01C | satin black | | | |
| - | 996 731 812 01 | cover | /R 01- | 1 | M265 |
| | 01C | satin black | | | |
| 2 | 996 731 619 00 | housing | /L | 1 | |
| | G2L | prime coated | | | |
| (2) | 996 731 620 00 | housing | /R | 1 | |
| | G2L | prime coated | | | |
| 3 | 999 919 170 02 | countersunk-head screw<br>3,0 X 10 | | 6 | |
| 4 | 986 731 219 00 | mirror base<br>door mirror<br>manually adjustable | /LL/L | 1 | |
| | G2L | prime coated | | | |
| (4) | 986 731 220 00 | mirror base<br>door mirror<br>manually adjustable | /LL/R | 1 | |
| | G2L | prime coated | | | |
| (4) | 986 731 219 01 | mirror base<br>door mirror<br>manually adjustable | /RL/L | 1 | |
| | G2L | prime coated | | | |
| (4) | 986 731 220 01 | mirror base<br>door mirror<br>manually adjustable | /RL/R | 1 | |
| | G2L | prime coated | | | |
| 5 | 996 731 219 00 | mirror base<br>door mirror<br>electrically adjustable | /LL/L | 1 | |

| Pos | Part Number | Description | Remark | Qty | Model |
|---|---|---|---|---|---|
| | G2L | prime coated | | | |
| 5 | 996 731 219 04 | mirror base<br>door mirror<br>electrically adjustable | /LL/L01- | 1 | M266 |
| | G2L | prime coated | | | |
| (5) | 996 731 220 00 | mirror base<br>door mirror<br>electrically adjustable | /LL/R | 1 | |
| | G2L | prime coated | | | |
| (5) | 996 731 219 01 | mirror base<br>door mirror<br>electrically adjustable | /RL/L | 1 | |
| | G2L | prime coated | | | |
| (5) | 996 731 220 01 | mirror base<br>door mirror<br>electrically adjustable | /RL/R | 1 | |
| | G2L | prime coated | | | |
| (5) | 996 731 220 04 | mirror base<br>door mirror<br>electrically adjustable | /RL/R01- | 1 | M266 |
| | G2L | prime coated | | | |
| (5) | 996 731 219 02 | mirror base<br>door mirror<br>electrically adjustable | /LL/L98- | 1 | M537 |
| | G2L | prime coated | | | |
| (5) | 996 731 219 05 | mirror base<br>door mirror<br>electrically adjustable | /LL/L01- | 1 | M537/266 |
| | G2L | prime coated | | | |
| (5) | 996 731 220 02 | mirror base<br>door mirror<br>electrically adjustable | /LL/R98- | 1 | M537 |
| | G2L | prime coated | | | |
| (5) | 996 731 219 03 | mirror base<br>door mirror<br>electrically adjustable | /RL/L98- | 1 | M538 |
| | G2L | prime coated | | | |

| Pos | Part Number | Description | Remark | Qty | Model |
|---|---|---|---|---|---|
| (5) | 996 731 220 03 | mirror base<br>door mirror<br>electrically adjustable | /RL/R98- | 1 | M538 |
| | G2L | prime coated | | | |
| (5) | 996 731 220 05 | mirror base<br>door mirror<br>electrically adjustable | /RL/R01- | 1 | M538/266 |
| | G2L | prime coated | | | |
| 6 | 999 073 125 02 | oval-head screw<br>M 5 X 14 | | 6 | |
| 7 | 999 507 549 02 | spring clamp | | 2 | |
| 8 | 900 278 010 02 | oval-head screw | | 2 | |
| 9 | 996 537 731 00 | filler piece | /L | 1 | |
| (9) | 996 537 732 00 | filler piece<br>outer | /R | 1 | |
| (9) | 996 537 733 00 | filler piece | /L | 1 | |
| (9) | 996 537 734 00 | filler piece<br>inner | /R | 1 | |
| 10 | 996 731 719 00 | cover<br>lower | /L | 1 | |
| | G2L | prime coated | | | |
| (10) | 996 731 720 00 | cover<br>lower | /R | 1 | |
| | G2L | prime coated | | | |
| 11 | 996 624 047 00 | adjusting motor | | 2 | |
| 11 | 996 624 048 00 | adjusting motor | 98- | 2 | M537/538 |
| 12 | 900 278 013 02 | oval-head screw<br>M 3 X 30 | | 6 | |
| 13 | 996 731 035 01 | mirror glass | /L | 1 | M270 |
| 13 | 996 731 035 03 | mirror glass<br>plane | /L 01- | 1 | M270/266 |
| (13) | 996 731 035 02 | mirror glass | /L | 1 | M271 |
| (13) | 996 731 035 04 | mirror glass<br>aspherical | /L 01- | 1 | M271/266 |

| Pos | Part Number | Description | Remark | Qty | Model |
|---|---|---|---|---|---|
| (13) | 996 731 037 01 | mirror glass<br>convex | /RL/L | 1 | |
| (13) | 996 731 036 01 | mirror glass | /RL/R | 1 | M270 |
| (13) | 996 731 036 03 | mirror glass<br>plane | /RL/R01- | 1 | M270/266 |
| (13) | 996 731 036 02 | mirror glass | /RL/R | 1 | M271 |
| (13) | 996 731 036 04 | mirror glass<br>aspherical | /RL/R01- | 1 | M271/266 |
| (13) | 996 731 038 02 | mirror glass<br>convex | /LL/R | 1 | |
| (13) | 996 731 038 04 | mirror glass<br>convex | /LL/R | 1 | (SA) |
| (14) | 996 612 674 00 | wiring harness | | 1 | |
| 15 | 999 652 710 10 | cylindrical socket | | 30 | |
| 16 | 999 650 173 40 | pin connector socket<br>15-pole | | 2 | |
| 17 | 311 906 231 B | connector housing<br>3-pole | | 2 | |
| (17) | 999 650 177 40 | plug socket<br>8-pole | 98- | 2 | M537/538 |
| (17) | 999 650 178 40 | slide<br>8-pole | 98- | 2 | M537/538 |

| Pos | Part Number | Description | Remark | Qty | Model |
|---|---|---|---|---|---|

| Model | Year | MG | SG | Illustration | Restrictions | UPD | 18:32 | 30.07.2008 | PET |
|---|---|---|---|---|---|---|---|---|---|
| 986 | 2004 | 8 | 09 | 809-15 | | 229 | | | |

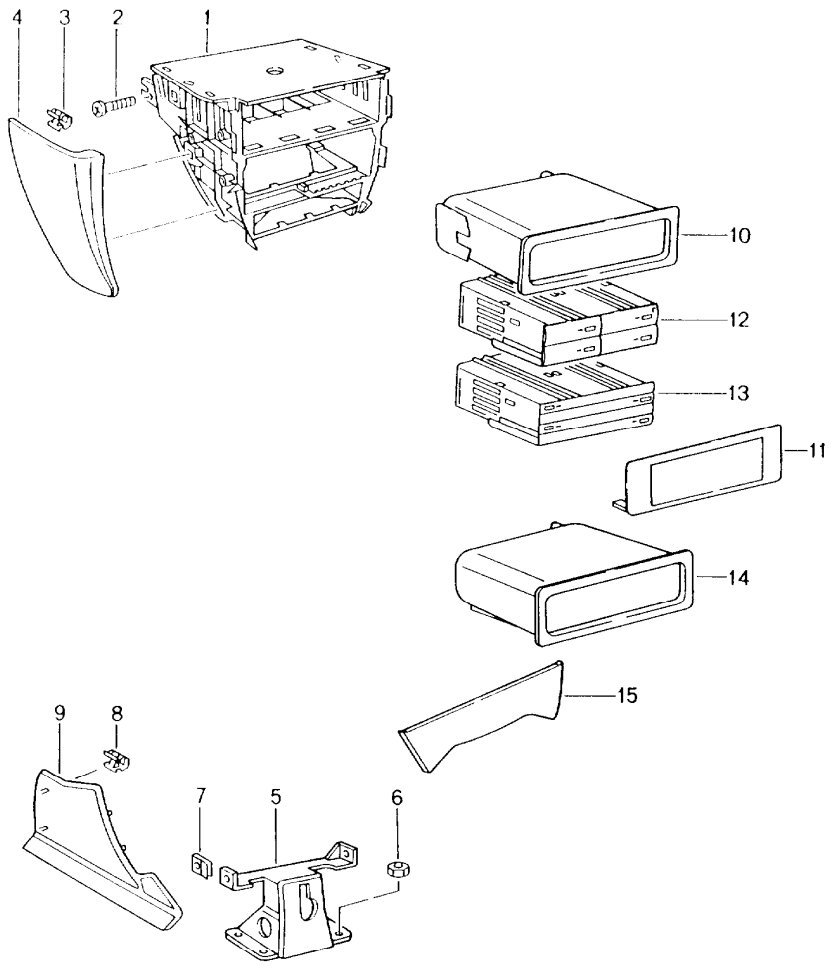


| Pos | Part Number | Description | Remark | Qty | Model |
|---|---|---|---|---|---|
| | | centre console<br>front | | | |
| 1 | 996 552 115 01 | bracket | -98 | 1 | |
| | 01C | satin black<br>Information available | | | |
| 1 | 996 552 115 02 | bracket | 99- | 1 | |
| | 01C | satin black | | | |
| 1 | 996 552 973 01 | bracket<br>leather | 01- | 1 | XMF |
| | A11 | black | | | |
| | C51 | graphite grey | | | |
| | S31 | savanna | | | |
| | J31 | nephrite green | | | |
| | M31 | boxster red | | | |
| | D12 | dark grey/natural | 00- | | |
| | T12 | brown/natural | 00- | | |
| | P12 | cinnamon brown | 01- | | |
| 2 | 999 919 121 09 | oval-head screw<br>5,0 X 16 | | 4 | |
| 3 | 999 507 476 01 | clamp<br>8,0 X 10,2 | | 3 | |
| (4) | --- --- --- -- | not for<br>preparation for telephone<br>see group<br>9/11/10 | | 1 | M614/618/663 |
| 4 | 996 552 091 02 | cover<br>leatherette | /L 97 | 1 | |
| | A10 | black | | | |
| | C50 | graphite grey | | | |
| | S30 | savanna | | | |
| (4) | 996 552 092 02 | cover<br>leatherette | /R 97 | 1 | |
| | A10 | black | | | |
| | C50 | graphite grey | | | |

| Pos | Part Number | Description | Remark | Qty | Model |
|---|---|---|---|---|---|
| | S30 | savanna | | | |
| 4 | 996 552 091 05 | cover<br>leatherette | /L 98 | 1 | M011/016 |
| | A18 | black | | | |
| | C18 | graphite grey | | | |
| | S18 | savanna | | | |
| | G18 | metropole blue | | | |
| (4) | 996 552 092 05 | cover<br>leatherette | /R 98 | 1 | M011/016 |
| | A18 | black | | | |
| | C18 | graphite grey | | | |
| | S18 | savanna | | | |
| | G18 | metropole blue | | | |
| (4) | 996 552 091 06 | cover<br>leatherette | /L 99 | 1 | M010/011/016 |
| | A18 | black | | | |
| | C18 | graphite grey | | | |
| | S18 | savanna | | | |
| | G18 | metropole blue | | | |
| (4) | 996 552 092 06 | cover<br>leatherette | /R 99 | 1 | M010/011/016 |
| | A18 | black | | | |
| | C18 | graphite grey | | | |
| | S18 | savanna | | | |
| | G18 | metropole blue | | | |
| 4 | 996 552 091 06 | cover<br>leatherette | /L 00- | 1 | M011/016 |
| | A12 | black | | | |
| | C52 | graphite grey | | | |
| | S32 | savanna | | | |
| | G12 | metropole blue | | | |

| Pos | Part Number | Description | Remark | Qty | Model |
|---|---|---|---|---|---|
| | J32 | nephrite green | 01- | | |
| (4) | 996 552 092 06 | cover<br>leatherette | /R 00- | 1 | M011/016 |
| | A12 | black | | | |
| | C52 | graphite grey | | | |
| | S32 | savanna | | | |
| | G12 | metropole blue | | | |
| | J32 | nephrite green | 01- | | |
| 4 | 986 552 091 00 | cover<br>leatherette | /L 98 | 1 | M012 |
| | A40 | black | | | |
| (4) | 986 552 092 00 | cover<br>leatherette | /R 98 | 1 | M012 |
| | A40 | black | | | |
| (4) | 986 552 091 01 | cover<br>leatherette | /L 99- | 1 | M012 |
| | A40 | black | | | |
| (4) | 986 552 092 01 | cover<br>leatherette | /R 99- | 1 | M012 |
| | A40 | black | | | |
| 4 | 996 552 091 03 | cover<br>leather | /L -98 | 1 | |
| | A11 | black | | | |
| | C51 | graphite grey | | | |
| | S31 | savanna | | | |
| | J31 | nephrite green | -03 | | |
| | M31 | boxster red | | | |
| | G11 | metropole blue | | | |
| (4) | 996 552 092 03 | cover<br>leather | /R -98 | 1 | |
| | A11 | black | | | |
| | C51 | graphite grey | | | |

| Pos | Part Number | Description | Remark | Qty | Model |
|---|---|---|---|---|---|
| | S31 | savanna | | | |
| | J31 | nephrite green | -03 | | |
| | M31 | boxster red | | | |
| | G11 | metropole blue | | | |
| 4 | 996 552 091 07 | cover<br>leather | /L 99- | 1 | |
| | A11 | black | | | |
| | C51 | graphite grey | | | |
| | S31 | savanna | | | |
| | J31 | nephrite green | -03 | | |
| | M31 | boxster red | | | |
| | G11 | metropole blue | | | |
| | D12 | dark grey/natural | 00- | | |
| | T12 | brown/natural | 00- | | |
| | P12 | cinnamon brown | 01- | | |
| | 9V6 | cocoa | 04- | | |
| (4) | 996 552 092 07 | cover<br>leather | /R 99- | 1 | |
| | A11 | black | | | |
| | C51 | graphite grey | | | |
| | S31 | savanna | | | |
| | J31 | nephrite green | -03 | | |
| | M31 | boxster red | | | |
| | G11 | metropole blue | | | |
| | D12 | dark grey/natural | 00- | | |
| | T12 | brown/natural | 00- | | |
| | P12 | cinnamon brown | 01- | | |
| | 9V6 | cocoa | 04- | | |
| (5) | 996 552 267 05 | support<br>lower | | 1 | M581 |
| 6 | 999 084 629 09 | hexagon nut<br>M 6 | | 4 | |
| 7 | 999 920 011 40 | plug-in nut<br>5,0 X 1,0 X 8 | | 4 | |
| 8 | 999 507 476 01 | clamp<br>8,0 X 10,2 | | 2 | |
| 9 | 996 552 113 01 | cover<br>carpet | /L 97 | 1 | |
| | A10 | black | | | |
| | C50 | graphite grey | | | |
| | S30 | savanna | | | |
| | J30 | nephrite green | -03 | | |
| | M30 | boxster red | | | |
| (9) | 996 552 114 01 | cover<br>carpet | /R 97 | 1 | |
| | A10 | black | | | |
| | C50 | graphite grey | | | |
| | S30 | savanna | | | |
| | J30 | nephrite green | -03 | | |
| | M30 | boxster red | | | |
| 9 | 996 552 113 02 | cover<br>carpet | /L 98- | 1 | |
| | A10 | black | | | |
| | C50 | graphite grey | | | |
| | S30 | savanna | | | |
| | J30 | nephrite green | -03 | | |
| | M30 | boxster red | | | |
| | G10 | metropole blue | 98- | | |
| | D11 | dark grey | 00- | | |
| | T11 | brown/natural | 00- | | |
| | P11 | cinnamon brown | 01- | | |
| | R10 | cocoa | 04- | | |

| Pos | Part Number | Description | Remark | Qty | Model |
|---|---|---|---|---|---|
| (9) | 996 552 114 02 | cover<br>carpet | /R 98- | 1 | |
| | A10 | black | | | |
| | C50 | graphite grey | | | |
| | S30 | savanna | | | |
| | J30 | nephrite green | -03 | | |
| | M30 | boxster red | | | |
| | G10 | metropole blue | 98- | | |
| | D11 | dark grey | 00- | | |
| | T11 | brown/natural | 00- | | |
| | P11 | cinnamon brown | 01- | | |
| | R10 | cocoa | 04- | | |
| 10 | 996 552 253 01 | shelf | | 1 | |
| | 01C | satin black | | | |
| 10 | 996 552 994 01 | shelf<br>leather | 01- | 1 | XMF |
| | A11 | black | | | |
| | C51 | graphite grey | | | |
| | S31 | savanna | | | |
| | J31 | nephrite green | | | |
| | M31 | boxster red | | | |
| | G11 | metropole blue | | | |
| | D12 | dark grey | | | |
| | T12 | brown/natural | | | |
| | P12 | cinnamon brown | | | |
| 11 | 996 552 443 00 | frame | | 1 | |
| | 01C | satin black | | | |
| (11) | 996 552 992 00 | frame<br>air-conditioning switch<br>leather | 01- | 1 | XKW/XNN |
| | A11 | black | | | |
| | C51 | graphite grey | | | |
| | S31 | savanna | | | |
| | G11 | metropole blue | | | |
| | J31 | nephrite green | | | |
| | M31 | boxster red | | | |
| | D12 | dark grey/natural | 00- | | |
| 12 | 996 552 763 00 | cassette box | -02 | 4 | M421 |
| (12) | 996 552 981 01 | cassette box<br>leather | 01-02 | 4 | XNF/M421 |
| | A11 | black | | | |
| | C51 | graphite grey | | | |
| | S31 | savanna | | | |
| | G11 | metropole blue | | | |
| | J31 | nephrite green | | | |
| | M31 | boxster red | | | |
| | D12 | dark grey/natural | 00- | | |
| | T12 | brown/natural | 00- | | |
| | P12 | cinnamon brown | 01- | | |
| 13 | 996 552 773 00 | box for cds | | 4 | M424 |
| (13) | 996 552 981 00 | box for cds<br>leather | 01- | 1 | XMF/M424 |
| | A11 | black | | | |
| | C51 | graphite grey | | | |
| | S31 | savanna | | | |
| | G11 | metropole blue | | | |
| | J31 | nephrite green | | | |
| | M31 | boxster red | | | |
| | D12 | dark grey/natural | 00- | | |

| Pos | Part Number | Description | Remark | Qty | Model |
|---|---|---|---|---|---|
| | T12 | brown/natural | 00- | | |
| | P12 | cinnamon brown | 01- | | |
| 14 | 996 552 243 01 | shelf | | 1 | |
| | 01C | satin black | | | |
| 14 | 996 552 982 01 | shelf<br>leather | 01- | 1 | XMF |
| | A11 | black | | | |
| | C51 | graphite grey | | | |
| | S31 | savanna | | | |
| | J31 | nephrite green | | | |
| | M31 | boxster red | | | |
| | G11 | metropole blue | | | |
| | D12 | dark grey | | | |
| | T12 | brown/natural | | | |
| | P12 | cinnamon brown | | | |
| (14) | 996 552 963 00 | cover<br>leather | 01- | 1 | XMF/XNN |
| | A11 | black | | | |
| | C51 | graphite grey | | | |
| | S31 | savanna | | | |
| | G11 | metropole blue | | | |
| | J31 | nephrite green | | | |
| | M31 | boxster red | | | |
| | D12 | dark grey | | | |
| | T12 | brown/natural | | | |
| | P12 | cinnamon brown | | | |
| (14) | 996 552 963 01 | cover<br>rootwood<br>light | 01- | 1 | XKR |
| (14) | 996 552 963 02 | cover<br>rootwood<br>dark | 01- | 1 | XKS |
| 14 | 996 552 963 04 | cover<br>carbon | 01- | 1 | XNR |
| 15 | 996 552 335 00 | trim for switch | -99 | 1 | |
| | 01C | satin black | | | |
| 15 | 996 552 335 00 | trim for switch | 00- | 1 | M009 |
| | 01C | satin black | | | |
| (15) | 986 552 335 00 | trim for switch | -02 | 1 | M008 |
| | 01C | satin black | | | |
| (15) | 986 552 335 01 | trim for switch<br>with<br>logo | 03- | 1 | M008 |
| | 01C | satin black | | | |
| (15) | 986 552 335 02 | trim for switch | 04 | 1 | M091/581 |
| | 01C | satin black | | | |
| (15) | 986 552 974 00 | trim for switch<br>leather | 00- | 1 | M008 |
| | A11 | black | | | |
| | C51 | graphite grey | | | |
| | S31 | savanna | | | |
| | G11 | metropole blue | | | |
| | J31 | nephrite green | | | |
| | M31 | boxster red | | | |
| | D12 | dark grey/natural | | | |
| | T12 | brown/natural | | | |
| | P12 | cinnamon brown | | | |
| 15 | 996 552 983 00 | trim for switch<br>leather | 01- | 1 | M009 |
| | A11 | black | | | |
| | C51 | graphite grey | | | |
| | S31 | savanna | | | |
| | J31 | nephrite green | | | |

| Pos | Part Number | Description | Remark | Qty | Model |
|---|---|---|---|---|---|
| | M31 | boxster red | | | |
| | G11 | metropole blue | | | |
| | D12 | dark grey | | | |
| | T12 | brown/natural | | | |
| | P12 | cinnamon brown | | | |

| Pos | Part Number | Description | Remark | Qty | Model |
|---|---|---|---|---|---|

| Model | Year | MG | SG | Illustration | Restrictions | UPD | 18:33 | 30.07.2008 | PORSCHE PET PORSCHE |
|---|---|---|---|---|---|---|---|---|---|
| 986 | 2004 | 8 | 09 | 809-20 | | 229 | | | |

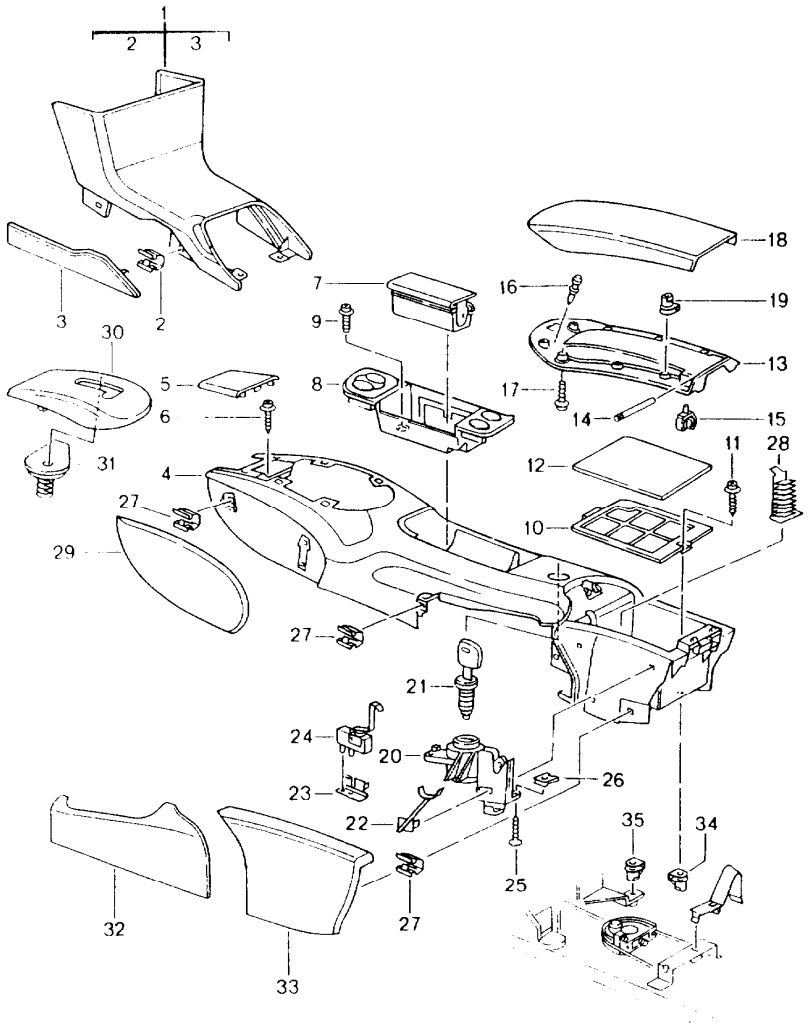


| Pos | Part Number | Description | Remark | Qty | Model |
|---|---|---|---|---|---|
| | | centre console<br>centre | | | |
| 1 | 986 552 113 02 | lining<br>carpet | -99 | 1 | |
| | A10 | black | | | |
| | C50 | graphite grey | | | |
| | S30 | savanna | | | |
| | J30 | nephrite green | | | |
| | M30 | boxster red | | | |
| | G10 | metropole blue | 98- | | |
| 1 | 986 552 113 03 | lining<br>carpet | 04 | 1 | M091 |
| | D11 | dark grey/natural | | | |
| | R10 | cocoa | | | |
| 2 | 999 507 533 02 | clamp | -99 | 26 | |
| 2 | 999 507 533 02 | clamp<br>8,0 X 10,2 | 04 | 8 | M091 |
| 3 | 986 552 513 02 | lid<br>carpet | /L -99 | 1 | |
| | A10 | black | | | |
| | C50 | graphite grey | | | |
| | S30 | savanna | | | |
| | J30 | nephrite green | | | |
| | M30 | boxster red | | | |
| | G10 | metropole blue | 98- | | |
| (3) | 986 552 514 02 | lid<br>carpet | /R -99 | 1 | |
| | A10 | black | | | |
| | C50 | graphite grey | | | |
| | S30 | savanna | | | |
| | J30 | nephrite green | | | |
| | M30 | boxster red | | | |

| Pos | Part Number | Description | Remark | Qty | Model |
|---|---|---|---|---|---|
| | G10 | metropole blue | 98- | | |
| 3 | 986 552 513 02 | lid<br>carpet | /L 04 | 1 | M091 |
| | D11 | dark grey/natural | | | |
| | R10 | cocoa | | | |
| (3) | 986 552 514 02 | lid<br>carpet | /R 04 | 1 | M091 |
| | D11 | dark grey/natural | | | |
| | R10 | cocoa | | | |
| 4 | A 996 552 125 01 | centre console | 97 | 1 | |
| | B12 | black-grey | | | |
| 4 | A 996 552 125 01 | centre console | 98-99 | 1 | M011/016 |
| | B12 | black-grey | | | |
| 4 | 996 552 902 00 | centre console | 98-99 | 1 | M011/016 |
| | B12 | black-grey | | | |
| 4 | 996 552 125 03 | centre console<br>lacquered | | 1 | |
| | D05 | granite grey | 99 | | M010 |
| | C02 | metal grey | 98- | | M012 |
| | A03 | black | 00- | | |
| 4 | 996 552 125 04 | centre console<br>lacquered | 04 | 1 | M091 |
| | M7Z | gt silver metallic | | | |
| 4 | 986 552 995 09 | centre console | -02 | 1 | XJB |
| | 92U | arctic silver metallic | | | |
| 4 | 986 552 995 09 | centre console | 01- | 1 | XME |
| | 39G | violet metallic | | | |
| | 746 | black-metallic | -01 | | |
| | 3W7 | dark blue | -01 | | |
| | 23I | wimbledon green metallic | -01 | | |
| | 9A3 | biarritz white | -01 | | |

| Pos | Part Number | Description | Remark | Qty | Model |
|---|---|---|---|---|---|
| | 2A2 | rainforest green metallic | -02 | | |
| | 92U | arctic silver metallic | | | |
| | 041 | black | | | |
| | 84A | guards red | | | |
| | 12H | speed yellow | | | |
| | 8A3 | orient red metallic | | | |
| | M5W | lapis blue metallic | | | |
| | 6A6 | meridian metallic | | | |
| | 39C | midnight blue metallic | | | |
| | 6B4 | seal grey metallic | | | |
| | 2B4 | forest green metallic | | | |
| | 3C8 | cobalt blue metallic | | | |
| | 92M | polar silver metallic | | | |
| | 23F | slate grey metallic | | | |
| | 1A8 | zanzibar red | | | |
| | B9A | carrara white | 02- | | |
| | C9Z | basalt black metallic | 02- | | |
| | M6W | lagoon green metallic | 03- | | |
| 4 | 986 552 995 09 | centre console | 03- | 1 | XCE |
| | V03 | sport silver | | | |
| 4 | 986 552 995 01 | centre console | 01 | 1 | XMZ |
| | VRK | black | | | |
| | C51 | graphite grey | | | |
| | S31 | savanna | | | |
| | G11 | metropole blue | | | |
| | J31 | nephrite green | | | |
| | M31 | boxster red | | | |
| | D12 | dark grey | 00- | | |
| | T12 | brown/natural | 00- | | |

| Pos | Part Number | Description | Remark | Qty | Model |
|---|---|---|---|---|---|
| | P12 | cinnamon brown | 01- | | |
| 4 | 986 552 995 05 | centre console<br>leather | 02- | 1 | XMZ |
| | VRK | black | | | |
| | C51 | graphite grey | | | |
| | S31 | savanna | | | |
| | G11 | metropole blue | | | |
| | J31 | nephrite green | | | |
| | M31 | boxster red | | | |
| | D12 | dark grey | 00- | | |
| | T12 | brown/natural | 00- | | |
| | P12 | cinnamon brown | 01- | | |
| 4 | 986 552 995 08 | centre console<br>carbon | | 1 | XMJ |
| - | 996 552 841 01 | sound absorber<br>front | | 1 | |
| - | 996 552 843 01 | sound absorber<br>centre | | 1 | |
| - | 996 552 845 01 | sound absorber<br>rear | | 1 | |
| 5 | 986 552 241 01 | cover | 97 | 1 | |
| | B12 | black-grey | | | |
| 5 | 986 552 241 01 | cover | 98-99 | 1 | M011/016 |
| | B12 | black-grey | | | |
| 5 | 986 552 241 02 | cover<br>lacquered | | 1 | |
| | D05 | granite grey | 99 | | M010 |
| | C02 | metal grey | 98-99 | | M012 |
| 5 | 986 552 241 04 | cover<br>lacquered | 04 | 1 | M091/249 |
| | M7Z | gt silver metallic | | | |
| 5 | 986 552 141 00 | cover<br>leather | 04 | 1 | M091/480 |

| Pos | Part Number | Description | Remark | Qty | Model |
|---|---|---|---|---|---|
| | 9V6 | cocoa | | | |
| | D12 | dark grey/natural | | | |
| 6 | 999 919 121 09 | oval-head screw<br>5,0 X 16 | | 5 | |
| 7 | 996 552 595 00 | insert | 97 | 1 | |
| | B12 | black-grey | | | |
| 7 | 996 552 595 00 | insert<br>ashtray | 98-99 | 1 | M011/016 |
| | B12 | black-grey | | | |
| 7 | 996 552 595 01 | insert<br>ashtray<br>lacquered | | 1 | |
| | D05 | granite grey | 99 | | M010 |
| | C02 | metal grey | 98- | | M012 |
| | A03 | black | 00- | | |
| 7 | 996 552 595 02 | insert<br>ashtray<br>lacquered | 04 | 1 | M091 |
| | M7Z | gt silver metallic | | | |
| 7 | 986 552 997 01 | insert<br>ashtray<br>leather | 01- | 1 | XMZ |
| | A11 | black | | | |
| | C51 | graphite grey | | | |
| | S31 | savanna | | | |
| | G11 | metropole blue | | | |
| | J31 | nephrite green | | | |
| | M31 | boxster red | | | |
| | D12 | dark grey/natural | | | |
| | T12 | brown/natural | | | |
| | P12 | cinnamon brown | | | |
| 7 | 986 552 997 02 | insert<br>ashtray<br>carbon | 01- | 1 | XMJ |

| Pos | Part Number | Description | Remark | Qty | Model |
|---|---|---|---|---|---|
| 7 | 986 552 997 00 | insert ashtray | 01- | 1 | XJB |
| | 92T | arctic silver | -02 | | |
| | V03 | silver | 03- | | XCE |
| | G2X | prime coated | | | XME |
| 8 | A 996 552 095 00 | ashtray | 97 | 1 | |
| | B12 | black-grey | | | |
| 8 | 986 552 901 00 | ashtray | 97 | 1 | |
| | B12 | black-grey | | | |
| 8 | 996 552 095 01 | ashtray lacquered | 98-00 | 1 | |
| | D05 | granite grey | 99 | | M010 |
| | C02 | metal grey | 98- | | M012 |
| | A03 | black | 00- | | |
| 8 | 996 552 095 02 | ashtray lacquered | 01- | 1 | |
| | C02 | metal grey | 98- | | M012 |
| | A03 | black | 00- | | |
| 8 | 996 552 095 03 | ashtray lacquered | 04 | 1 | M091 |
| | M7Z | gt silver metallic | | | |
| 8 | 986 552 996 05 | ashtray leather | 01- | 1 | XMZ |
| | A11 | black | | | |
| | C51 | graphite grey | | | |
| | S31 | savanna | | | |
| | G11 | metropole blue | | | |
| | J31 | nephrite green | | | |
| | M31 | boxster red | | | |
| | D12 | dark grey/natural | 00- | | |
| | T12 | brown/natural | 00- | | |
| | P12 | cinnamon brown | 01- | | |
| 8 | 986 552 996 08 | ashtray carbon | 01- | 1 | XMJ |
| 8 | 986 552 996 09 | ashtray | 01- | 1 | XJB/ |
| | 92T | arctic silver | -02 | | |
| | V03 | silver | 03- | | XCE |
| (8) | 996 552 096 00 | shelf | 97 | 1 | M580 |
| | B12 | black-grey | | | |
| (8) | 996 552 096 00 | shelf | 98-99 | 1 | M011/016/580 |
| | B12 | black-grey | | | |
| (8) | 996 552 096 01 | shelf | | 1 | M580 |
| | C02 | metal grey | 98- | | M012 |
| | D05 | granite grey | 99 | | M010 |
| | A03 | black | 00- | | |
| - | 996 552 596 00 | insert | | 1 | |
| (9) | 999 591 941 40 | screw with expander nut | | 2 | |
| 10 | 996 552 365 00 | floor shelf | | 1 | |
| 11 | 999 919 121 09 | oval-head screw M 5 X 16 | | 1 | |
| 12 | 996 552 665 00 | insert shelf | | 1 | |
| 13 | 996 552 205 00 | lid | | 1 | |
| | 01C | satin black | | | |
| 14 | 996 552 605 00 | hinge pin | | 1 | |
| 15 | 996 552 813 00 | support | | 2 | |
| 16 | 996 552 833 00 | rubber stop | | 2 | |
| 17 | 999 919 175 09 | oval-head screw 3,5 X 12 | | 8 | |
| 18 | 996 552 155 02 | lid leatherette | 97 | 1 | |

| Pos | Part Number | Description | Remark | Qty | Model |
|---|---|---|---|---|---|
| | A10 | black | | | |
| | C50 | graphite grey | | | |
| | S30 | savanna | | | |
| 18 | 996 552 155 04 | lid<br>leatherette | 98-99 | 1 | |
| | A18 | black | | | |
| | C18 | graphite grey | | | |
| | S18 | savanna | | | |
| | G18 | metropole blue | | | |
| 18 | 996 552 155 04 | lid<br>leatherette | 00- | 1 | |
| | A12 | black | | | |
| | C52 | graphite grey | | | |
| | S32 | savanna | | | |
| | G12 | metropole blue | | | |
| | J32 | nephrite green | 01- | | |
| 18 | 996 552 155 03 | lid<br>leather | | 1 | |
| | A11 | black | | | |
| | C51 | graphite grey | | | |
| | S31 | savanna | | | |
| | J31 | nephrite green | | | |
| | M31 | boxster red | | | |
| | G11 | metropole blue | | | |
| | D12 | dark grey | 00- | | |
| | T12 | brown/natural | 00- | | |
| | P12 | cinnamon brown | 01- | | |
| 18 | 996 552 965 00 | lid<br>leather | 01- | 1 | XMZ |
| | VRK | black | | | |
| | C51 | graphite grey | | | |
| | S31 | savanna | | | |
| | G11 | metropole blue | | | |
| | J31 | nephrite green | | | |
| | M31 | boxster red | | | |
| | D12 | dark grey | | | |
| | T12 | brown/natural | | | |
| | P12 | cinnamon brown | | | |
| 19 | 999 920 017 40 | plug-in nut<br>3,5 X 2,5 X 5 | | 8 | |
| 20 | 996 552 097 01 | lock | | 1 | |
| | 01C | satin black | | | |
| 21 | 996 552 907 00 | lock cylinder<br>w/o stipulated lock number | | 1 | |
| 21 | 996 552 907 01 | lock cylinder<br>state lock number | | 1 | |
| 22 | 986 552 297 00 | cover | 97 | 1 | |
| | B12 | black-grey | | | |
| 23 | 996 637 211 00 | support | | 1 | |
| 24 | 996 613 205 00 | microswitch | | 1 | |
| 25 | 999 919 121 09 | oval-head screw<br>5 X 16 | | 3 | |
| 26 | 999 920 011 40 | plug-in nut<br>5,0 X 2,0 X 8 | | 3 | |
| 27 | 999 507 476 01 | clamp<br>8,0 X 10,2 | | 25 | |
| 28 | 996 552 695 00 | coin box | | 1 | |
| | 01C | satin black | | | |
| 29 | 986 552 087 00 | cover | /L 97 | 1 | |
| | B12 | black-grey | | | |
| (29) | 986 552 088 00 | cover | /R 97 | 1 | |
| | B12 | black-grey | | | |
| 29 | 986 552 087 00 | cover | /L 98-99 | 1 | M016 |

| Pos | Part Number | Description | Remark | Qty | Model |
|---|---|---|---|---|---|
| | B12 | black-grey | | | |
| (29) | 986 552 087 00 | cover | /R 98-99 | 1 | M016 |
| | B12 | black-grey | | | |
| 29 | 986 552 087 01 | cover | /L 98- | 1 | M012 |
| | A40 | black | | | |
| (29) | 986 552 088 01 | cover | /R 98- | 1 | M012 |
| | A40 | black | | | |
| 29 | 996 552 087 02 | cover leatherette | /L 97 | 1 | M581 |
| | A10 | black | | | |
| | C50 | graphite grey | | | |
| | S30 | savanna | | | |
| (29) | 996 552 088 02 | cover leatherette | /R 97 | 1 | M581 |
| | A10 | black | | | |
| | C50 | graphite grey | | | |
| | S30 | savanna | | | |
| 29 | 996 552 087 05 | cover leatherette | /L 98-99 | 1 | M581 |
| | A18 | black | | | |
| | C18 | graphite grey | | | |
| | S18 | savanna | | | |
| | G18 | metropole blue | | | |
| (29) | 996 552 088 05 | cover leatherette | /R 98-99 | 1 | M581 |
| | A18 | black | | | |
| | C18 | graphite grey | | | |
| | S18 | savanna | | | |
| | G18 | metropole blue | | | |
| 29 | 996 552 087 05 | cover leatherette | /L 00- | 1 | |

| Pos | Part Number | Description | Remark | Qty | Model |
|---|---|---|---|---|---|
| | A12 | black | | | |
| | C52 | graphite grey | | | |
| | S32 | savanna | | | |
| | G12 | metropole blue | | | |
| | J32 | nephrite green | 01- | | |
| (29) | 996 552 088 05 | cover leatherette | /R 00- | 1 | |
| | A12 | black | | | |
| | C52 | graphite grey | | | |
| | S32 | savanna | | | |
| | G12 | metropole blue | | | |
| | J32 | nephrite green | 01- | | |
| (29) | 996 552 087 03 | cover leather | /L -99 | 1 | M581 |
| | A11 | black | | | |
| | C51 | graphite grey | | | |
| | S31 | savanna | | | |
| | J31 | nephrite green | | | |
| | M31 | boxster red | | | |
| | G11 | metropole blue | 98- | | |
| (29) | 996 552 088 03 | cover leather | /R -99 | 1 | M581 |
| | A11 | black | | | |
| | C51 | graphite grey | | | |
| | S31 | savanna | | | |
| | J31 | nephrite green | | | |
| | M31 | boxster red | | | |
| | G11 | metropole blue | 98- | | |
| (29) | 996 552 087 03 | cover leather | /L 00- | 1 | |
| | A11 | black | | | |

| Pos | Part Number | Description | Remark | Qty | Model |
|---|---|---|---|---|---|
| | C51 | graphite grey | | | |
| | S31 | savanna | | | |
| | J31 | nephrite green | | | |
| | M31 | boxster red | | | |
| | G11 | metropole blue | 98- | | |
| | D12 | dark grey | 00- | | |
| | T12 | brown/natural | 00- | | |
| | P12 | cinnamon brown | 01- | | |
| (29) | 996 552 088 03 | cover<br>leather | /R 00- | 1 | |
| | A11 | black | | | |
| | C51 | graphite grey | | | |
| | S31 | savanna | | | |
| | J31 | nephrite green | | | |
| | M31 | boxster red | | | |
| | G11 | metropole blue | 98- | | |
| | D12 | dark grey | 00- | | |
| | T12 | brown/natural | 00- | | |
| | P12 | cinnamon brown | 01- | | |
| (30) | 996 552 655 01 | retaining frame | | 1 | M480/481 |
| 30 | 996 552 257 01 | cover | /LL 97 | 1 | M249 |
| | EBO | black | | | |
| 30 | 996 552 257 01 | cover | /LL98-99 | 1 | M249/011/016 |
| | EBO | black | | | |
| (30) | 996 552 257 03 | cover | /RL 97 | 1 | M249 |
| | EBO | black | | | |
| (30) | 996 552 257 03 | cover | /RL98-99 | 1 | M249/011/016 |
| | EBO | black | | | |
| 30 | 996 552 257 02 | cover<br>lacquered | /LL98-99 | 1 | M012/249 |
| | EJS | metal grey | | | |
| (30) | 996 552 257 04 | cover<br>lacquered | /RL98-99 | 1 | M012/249 |
| | EJS | metal grey | | | |
| (30) | 996 552 259 00 | cover | /LL00-02 | 1 | M249 |
| | EOY | black/<br>silver | | | |
| | EOX | metal grey<br>silver | | | M012 |
| (30) | 996 552 259 01 | cover<br>lacquered | /RL00-02 | 1 | M249 |
| | EOY | black/<br>silver | | | |
| | EOX | metal grey<br>silver | | | M012 |
| 30 | 996 552 259 02 | cover<br>lacquered | /LL 03- | 1 | M249 |
| | EOU | black/<br>silver | | | |
| | EOV | metal grey<br>silver | | | M012 |
| (30) | 996 552 259 03 | cover<br>lacquered | /RL 03- | 1 | M249 |
| | EOU | black/<br>silver | | | |
| | EOV | metal grey<br>silver | | | M012 |
| 30 | 986 552 259 02 | cover<br>lacquered | /LL 04 | 1 | M091/249 |
| | M7Z | gt silver metallic | | | |
| (30) | 986 552 259 03 | cover<br>lacquered | /RL 04 | 1 | M091/249 |
| | M7Z | gt silver metallic | | | |
| (30) | 996 552 977 20 | cover<br>leather | /LL01-02 | 1 | XY5/M249 |
| | VRK | black | | | |

| Pos | Part Number | Description | Remark | Qty | Model |
|---|---|---|---|---|---|
| | C51 | graphite grey | | | |
| | S31 | savanna | | | |
| | J31 | nephrite green | | | |
| | M31 | boxster red | | | |
| | G11 | metropole blue | | | |
| | T12 | brown/natural | | | |
| | D12 | dark grey | | | |
| | P12 | cinnamon brown | | | |
| (30) | 996 552 977 21 | cover<br>leather | /RL01-02 | 1 | XY5/M249 |
| | VRK | black | | | |
| | C51 | graphite grey | | | |
| | S31 | savanna | | | |
| | J31 | nephrite green | | | |
| | M31 | boxster red | | | |
| | G11 | metropole blue | | | |
| | T12 | brown/natural | | | |
| | D12 | dark grey | | | |
| | P12 | cinnamon brown | | | |
| 30 | 996 552 977 26 | cover<br>leather | /LL 03- | 1 | XY5/M249 |
| | VRK | black | | | |
| | C51 | graphite grey | | | |
| | S31 | savanna | | | |
| | G11 | metropole blue | | | |
| | J31 | nephrite green | | | |
| | M31 | boxster red | | | |
| | P12 | cinnamon brown | | | |
| | D12 | dark grey/natural | | | |
| | T12 | brown/natural | | | |

| Pos | Part Number | Description | Remark | Qty | Model |
|---|---|---|---|---|---|
| (30) | 996 552 977 27 | cover<br>leather | /RL 03- | 1 | XY5/M249 |
| | VRK | black | | | |
| | C51 | graphite grey | | | |
| | S31 | savanna | | | |
| | G11 | metropole blue | | | |
| | J31 | nephrite green | | | |
| | M31 | boxster red | | | |
| | P12 | cinnamon brown | | | |
| | D12 | dark grey/natural | | | |
| | T12 | brown/natural | | | |
| 31 | 996 552 687 00 | slide | | 1 | M249 |
| | 01C | satin black | | | |
| 32 | 996 552 283 01 | cover | 97 | 1 | |
| | B12 | black-grey | | | |
| 32 | 996 552 283 01 | cover<br>handbrake | 98-99 | 1 | M011/016 |
| | B12 | black-grey | | | |
| 32 | 996 552 283 02 | cover<br>handbrake<br>lacquered | | 1 | |
| | D05 | granite grey | 99 | | M010 |
| | C02 | metal grey | 98- | | M012 |
| | A03 | black | 00- | | |
| 32 | 996 552 283 03 | cover<br>handbrake<br>lacquered | 04 | 1 | M091 |
| | M7Z | gt silver metallic | | | |
| 32 | 996 552 993 02 | cover<br>handbrake<br>carbon | 01- | 1 | XMJ |
| 32 | 996 552 993 01 | cover<br>handbrake<br>lacquered | 03- | 1 | XCE |

| Pos | Part Number | Description | Remark | Qty | Model |
|---|---|---|---|---|---|
| | V03 | sport silver | | | |
| 33 | 986 552 089 00 | cover | /L 97 | 1 | |
| | B12 | black-grey | | | |
| (33) | 986 552 090 00 | cover | /R 97 | 1 | |
| | B12 | black-grey | | | |
| 33 | 986 552 089 00 | cover | /L 98-99 | 1 | M011/016 |
| | B12 | black-grey | | | |
| (33) | 986 552 090 00 | cover | /R 98-99 | 1 | M011/016 |
| | B12 | black-grey | | | |
| 33 | 996 552 089 05 | cover lacquered | /L 98- | 1 | |
| | C02 | metal grey | 98- | | M012 |
| | D05 | granite grey | 99 | | M010 |
| | A03 | black | 00- | | |
| (33) | 996 552 090 05 | cover lacquered | /R 98- | 1 | |
| | C02 | metal grey | 98- | | M012 |
| | D05 | granite grey | 99 | | M010 |
| | A03 | black | 00- | | |
| 33 | 996 552 089 04 | cover leather | /L 01- | 1 | XMJ |
| | A11 | black | | | |
| | C51 | graphite grey | | | |
| | S31 | savanna | | | |
| | G11 | metropole blue | | | |
| | J31 | nephrite green | -03 | | |
| | M31 | boxster red | | | |
| | P12 | cinnamon brown | | | |
| | D12 | dark grey/natural | | | |
| | T12 | brown/natural | | | |
| (33) | 996 552 090 04 | cover leather | /R 01- | 1 | XMJ |
| | A11 | black | | | |
| | C51 | graphite grey | | | |
| | S31 | savanna | | | |
| | G11 | metropole blue | | | |
| | J31 | nephrite green | -03 | | |
| | M31 | boxster red | | | |
| | P12 | cinnamon brown | | | |
| | D12 | dark grey/natural | | | |
| | T12 | brown/natural | | | |
| 33 | 996 552 089 04 | cover leather | /L 01- | 1 | XMZ |
| | A11 | black | | | |
| | C51 | graphite grey | | | |
| | S31 | savanna | | | |
| | G11 | metropole blue | | | |
| | J31 | nephrite green | -03 | | |
| | M31 | boxster red | | | |
| (33) | 996 552 090 04 | cover leather | /R 01- | 1 | XMZ |
| | A11 | black | | | |
| | C51 | graphite grey | | | |
| | S31 | savanna | | | |
| | G11 | metropole blue | | | |
| | J31 | nephrite green | -03 | | |
| | M31 | boxster red | | | |

| Pos | Part Number | Description | Remark | Qty | Model |
|---|---|---|---|---|---|
| | P12 | cinnamon brown | | | |
| | D12 | dark grey/natural | | | |
| | T12 | brown/natural | | | |
| 33 | 996 552 089 04 | cover<br>leather | /L 04 | 1 | M091 |
| | D12 | dark grey/natural | | | |
| | 9V6 | cocoa | | | |
| (33) | 996 552 090 04 | cover<br>leather | /R 04 | 1 | M091 |
| | D12 | dark grey/natural | | | |
| | 9V6 | cocoa | | | |
| 34 | 999 920 013 40 | plug-in nut<br>5,0 X 1,0 X 8 | | 1 | |
| 35 | 999 920 012 40 | plug-in nut<br>5,0 X 3,5 X 8 | | 2 | |

| Pos | Part Number | Description | Remark | Qty | Model |
|---|---|---|---|---|---|

| Model | Year | MG | SG | Illustration | Restrictions | UPD | 18:33 | 30.07.2008 | PET |
|---|---|---|---|---|---|---|---|---|---|
| 986 | 2004 | 8 | 10 | 810-00 | | 229 | | | |

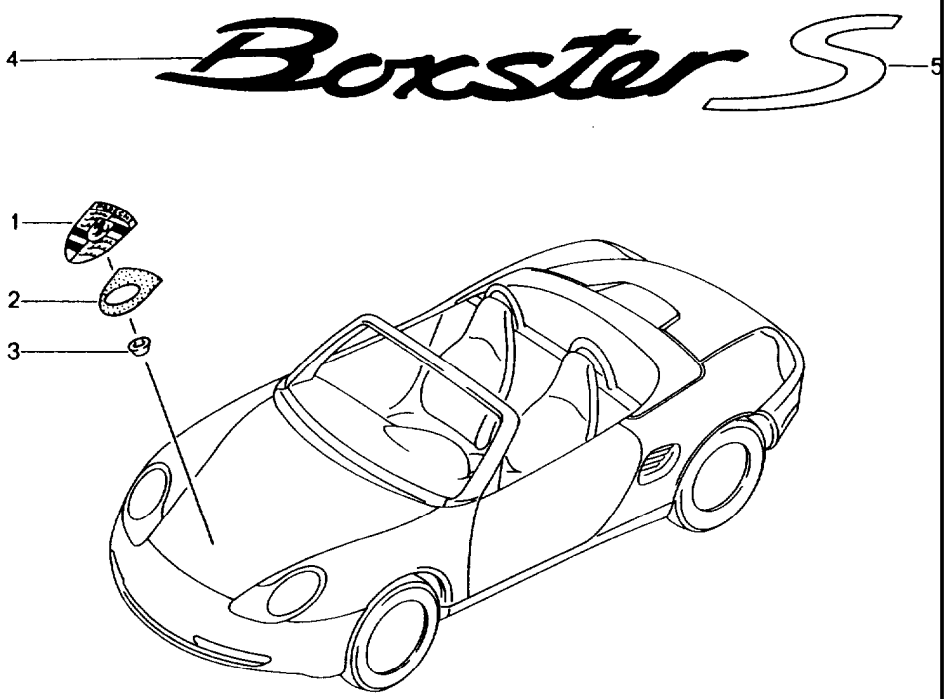


| Pos | Part Number | Description | Remark | Qty | Model |
|---|---|---|---|---|---|
| | | insignias | | | |
| 1 | A 993 559 211 00 | lid emblem | -00 | 1 | |
| 1 | 996 559 211 00 | lid emblem | 01- | 1 | |
| 2 | 901 559 215 20 | desk pad | -03 | 1 | |
| 2 | 7L5 853 611 B | desk pad | 03- | 1 | |
| 3 | 999 591 423 03 | tapping nut | | 2 | |
| 4 | 986 559 237 00 | logo | | 1 | |
| | 70C | rally black | | | |
| (4) | 986 559 237 01 | logo | 00- | 1 | M008 |
| | 9A4 | titanium metallic | | | |
| (4) | 986 559 237 02 | logo<br>chrome | 04 | 1 | M091 |
| 5 | 986 559 243 00 | logo | 00- | 1 | M008 |
| | 9A4 | titanium metallic | | | |
| (5) | 986 559 243 01 | logo<br>chrome | 04 | 1 | M091 |

| Model | Year | MG | SG | Illustration | Restrictions | UPD | 18:33 | 30.07.2008 |
|---|---|---|---|---|---|---|---|---|
| 986 | 2004 | 8 | 10 | 810-05 | | 229 | | |

| Pos | Part Number | Description | Remark | Qty | Model |
|---|---|---|---|---|---|
| | | sill cover | 01- | | X76/XAA |
| 1 | 986 559 983 01 | sill cover | /L | 1 | |
| | G2X | prime coated | | | |
| (1) | 986 559 984 01 | sill cover | /R | 1 | |
| | G2X | prime coated | | | |
| 3 | 996 559 985 01 | adhesive film | /L | 1 | |
| (3) | 996 559 986 01 | adhesive film | /R | 1 | |
| 6 | 999 073 231 09 | tapping screw<br>4,8 X 16 | | 20 | |

| Model | Year | MG | SG | Illustration | Restrictions | UPD | 18:33 | 30.07.2008 | PET |
|---|---|---|---|---|---|---|---|---|---|
| 986 | 2004 | 8 | 11 | 811-00 | | 229 | | | |

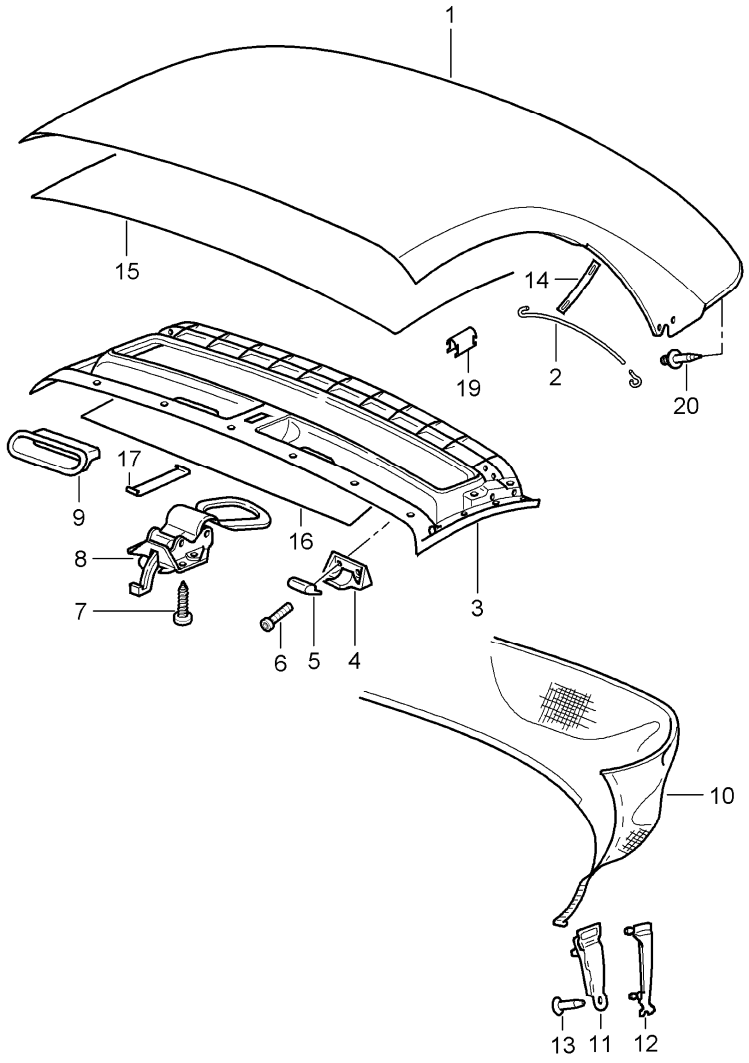


| Pos | Part Number | Description | Remark | Qty | Model |
|---|---|---|---|---|---|
| | | convertible top covering<br>roofliner | | | |
| 1 | 986 561 915 03 | convertible top covering<br>with<br>rear window<br>and<br>installation parts | -02 | 1 | |
| | A10 | black | | | |
| | C50 | graphite grey | | | |
| | G10 | metropole blue | | | |
| 1 | 986 561 915 05 | convertible top covering<br>with<br>rear window<br>and<br>installation parts | 03- | 1 | |
| | A10 | black | | | |
| | C50 | graphite grey | | | |
| | G02 | metropole blue | | | |
| | R17 | brown | | | |
| | | when required order also: | | | |
| -- | 000 043 300 45 | repair kit<br>26 | | 1 | |
| 2 | 986 561 921 00 | tension rope | | 2 | |
| 3 | 986 561 933 00 | roof frame | | 1 | |
| 4 | 986 561 605 01 | centring journal | | 2 | |
| | A09 | black<br>with | | | |
| 5 | --- --- --- -- | cap<br>black | 99- | 2 | |
| 6 | 999 919 144 09 | oval-head screw | | 4 | |
| 7 | 999 919 148 09 | oval-head screw | | 4 | |
| 8 | A 986 561 017 01 | catch | | 1 | |
| | A09 | black | | | |
| 8 | 986 561 017 02 | catch | | 1 | |
| | A09 | black | | | |

| Pos | Part Number | Description | Remark | Qty | Model |
|---|---|---|---|---|---|
| 9 | 986 561 417 00 | finger plate | | 2 | |
| | 01C | black | | | |
| 10 | 986 561 085 00 | cloth | -02 | 1 | |
| 10 | 986 561 085 02 | cloth | 03- | 1 | |
| 11 | 986 561 669 03 | slide | /L | 1 | |
| (11)A | 986 561 670 02 | slide | /R | 1 | |
| (11) | 986 561 670 03 | slide | /R | 1 | |
| 12 | 986 561 559 01 | clamping piece | /L -02 | 1 | |
| 12 | 986 561 559 02 | clamping piece | /L 03- | 1 | |
| (12) | 986 561 560 01 | clamping piece | /R -02 | 1 | |
| (12) | 986 561 560 02 | clamping piece | /R 03- | 1 | |
| 13 | 986 561 597 00 | pin | | 2 | |
| 14 | 986 561 931 00 | traction noose | | 2 | |
| 15 | 986 561 025 02 | roofliner | -02 | 1 | |
| | A21 | black | | | |
| 15 | 986 561 025 03 | roofliner | 03- | 1 | |
| | A21 | black | | | |
| 16 | 986 561 902 00 | retaining strip | | 1 | |
| 16 | 986 561 902 01 | retaining strip | | 1 | M008 |
| 17 | 986 561 903 00 | clamp | | 1 | |
| -- | 986 563 855 01 | protective fleece cover<br>for<br>rear window | | 1 | |
| -- | 999 917 557 00 | grease<br>30 ML | | X | |
| 20 | 999 591 941 40 | expander nut | 03- | 4 | |

| Model | Year | MG | SG | Illustration | Restrictions | UPD | 18:33 | 30.07.2008 | PET |
|---|---|---|---|---|---|---|---|---|---|
| 986 | 2004 | 8 | 11 | 811-05 | | 229 | | | |

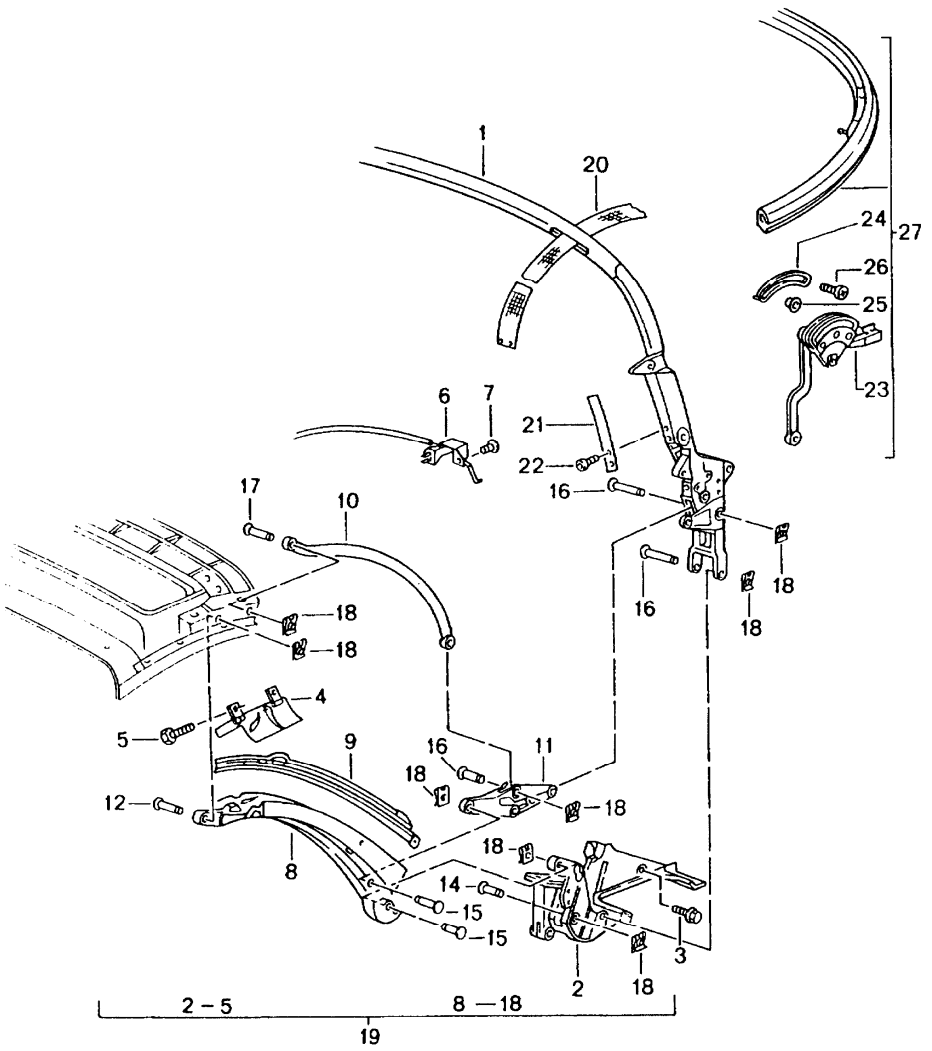


| Pos | Part Number | Description | Remark | Qty | Model |
|---|---|---|---|---|---|
| | | convertible top frame<br>single parts | | | |
| 1 | 986 561 037 00 | main folding top bow | | 1 | |
| | 70C | black | | | |
| 1 | 986 561 037 01 | main folding top bow | | 1 | M 008 |
| | 70C | black | | | |
| 1 | 986 561 037 03 | main folding top bow | 03- | 1 | |
| | A09 | black | | | |
| 2 | 986 561 443 00 | convertible top support | /L | 1 | |
| | 70C | black | | | |
| (2) | 986 561 444 00 | convertible top support | /R | 1 | |
| | 70C | black | | | |
| 3 | 900 378 033 09 | hexagon-head bolt | | 6 | |
| 4 | 986 561 165 00 | flap | | 1 | |
| | A09 | black | | | |
| 4 | 986 561 166 00 | flap | | 1 | |
| | A09 | black | | | |
| 5 | 999 919 141 09 | oval-head screw | | 2 | |
| 6 | 986 613 101 02 | microswitch | | 1 | |
| 7 | 999 919 152 09 | oval-head screw | | 1 | |
| 8 | 986 561 935 00 | b-pillar | /L | 1 | |
| | A09 | black | | | |
| (8) | 986 561 936 00 | b-pillar | /R | 1 | |
| | A09 | black | | | |
| -- | 986 561 646 00 | support<br>for | | 2 | |
| -- | 986 561 656 00 | tension rope | | 1 | |
| 9 | 986 561 909 00 | clamping strip | /L | 1 | |
| (9) | 986 561 910 00 | clamping strip | /R | 1 | |
| 10 | 986 561 039 00 | control arm | /L | 1 | |

| Pos | Part Number | Description | Remark | Qty | Model |
|---|---|---|---|---|---|
| | 70C | black | | | |
| (10) | 986 561 040 00 | control arm | /R | 1 | |
| | 70C | black | | | |
| 11 | 986 561 345 00 | steering arm<br>lower | /L | 1 | |
| (11) | 986 561 346 00 | steering arm<br>lower | /R | 1 | |
| 12 | 999 088 042 30 | bolt<br>8M 6X25,8 | | X | |
| 14 | 999 088 042 30 | bolt<br>8M 6X25,8 | | X | |
| 15 | 999 088 042 30 | bolt<br>8M 6X25,8 | | X | |
| 16 | 999 088 028 30 | bolt<br>8M 6X70,8 | | X | |
| 17 | 999 088 030 30 | bolt<br>8M 6X45,8 | | X | |
| 18 | 999 166 075 02 | lock | | X | |
| 19 | 986 561 911 03 | convertible top frame | -02 | 1 | |
| | A09 | black | | | |
| 19 | 986 561 911 04 | convertible top frame | 03- | 1 | |
| | A09 | black | | | |
| | | without<br>roll-over bar | | | |
| 20 | 986 561 971 01 | belt | /L -02 | 1 | |
| 20 | 986 561 971 03 | belt | /L 03- | 1 | |
| 20 | 986 561 972 01 | belt | /R -02 | 1 | |
| 20 | 986 561 972 03 | belt | /R 03- | 1 | |
| -- | 900 333 001 30 | blind rivet | | X | |
| 21 | 986 561 769 00 | leaf spring | | 2 | |
| 22 | 999 919 139 09 | lens-head screw | | 4 | |
| -- | 986 561 671 00 | cover | /L | 1 | |
| -- | 986 561 672 00 | cover | /R | 1 | |

| Pos | Part Number | Description | Remark | Qty | Model |
|---|---|---|---|---|---|
| -- | 986 561 905 00 | piping<br>b-pillar | /L | 1 | |
| -- | 986 561 906 00 | piping<br>b-pillar | /R | 1 | |
| 23 | 986 561 247 00 | connecting piece | /L -02 | 1 | |
| | 70C | black | | | |
| 23 | 986 561 248 00 | connecting piece | /R -02 | 1 | |
| | 70C | black | | | |
| 24 | 986 561 871 00 | guide | -02 | 4 | |
| 25 | 999 924 118 40 | bush | -02 | X | |
| 26 | 999 919 144 09 | lens-head screw | -02 | 4 | |
| 27 | 986 561 901 02 | roof strut | -02 | 1 | |
| (27) | 986 561 901 03 | roof strut | 03- | 1 | |
| 28 | 986 561 237 01 | roof strut | 03- | 1 | |
| 29 | 986 561 671 02 | cover | /L 03- | 1 | |
| (29) | 986 561 672 02 | cover | /R 03- | 1 | |
| 30 | 986 561 675 01 | cover | /L 03- | 1 | |
| (30) | 986 561 676 01 | cover | /R 03- | 1 | |
| 31 | 999 088 042 30 | bolt | 03- | 2 | |
| 32 | 999 088 043 30 | bolt | 03- | 2 | |
| 33 | 986 561 973 00 | restraining strap | 03- | 2 | |
| 34 | 986 612 315 00 | wiring harness | 03- | 1 | |

| Model | Year | MG | SG | Illustration | Restrictions | UPD | 18:34 | 30.07.2008 | PET |
|---|---|---|---|---|---|---|---|---|---|
| 986 | 2004 | 8 | 11 | 811-10 | | 229 | | | |

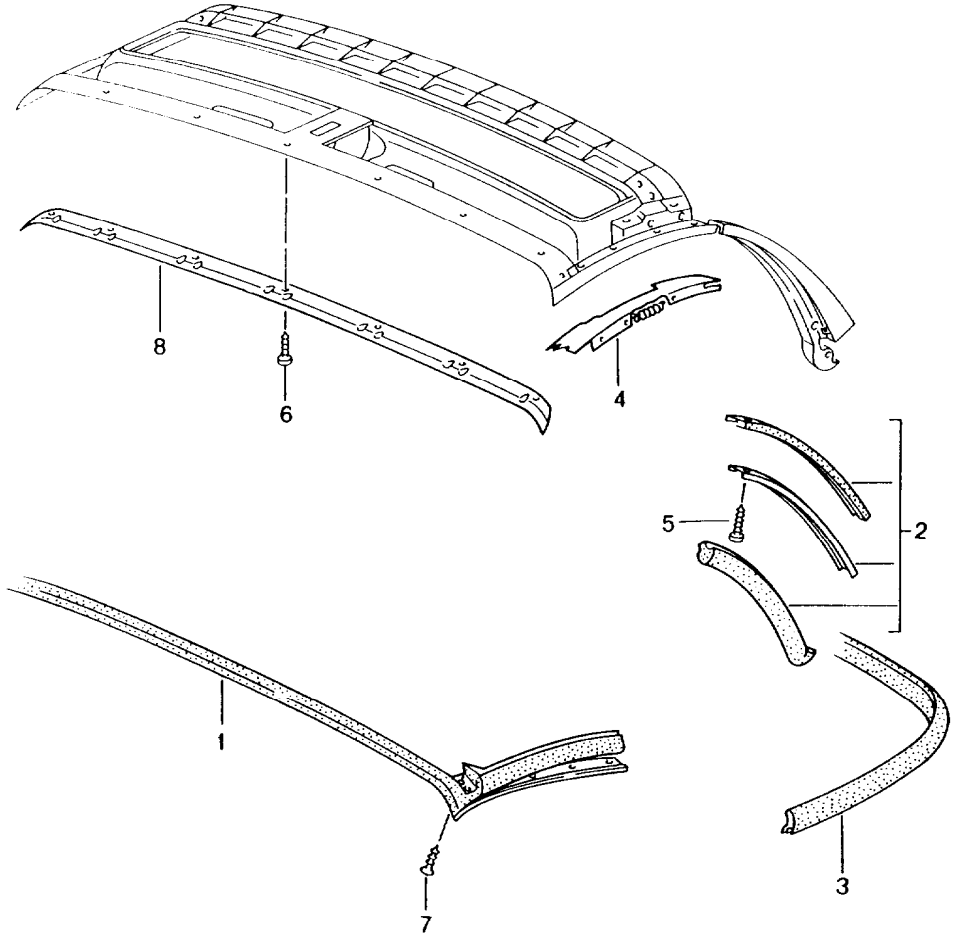


| Pos | Part Number | Description | Remark | Qty | Model |
|---|---|---|---|---|---|
| | | convertible top seal | | | |
| 1 | 986 561 927 01 | roof frame seal | -02 | 1 | |
| 1 | 986 561 927 02 | roof frame seal | 03- | 1 | |
| - | 986 561 813 01 | filler piece | /L | 1 | |
| - | 986 561 814 01 | filler piece | /R | 1 | |
| 2 | 986 561 923 01 | gasket set b-pillar | /L -02 | 1 | |
| 2 | 986 561 923 02 | gasket set b-pillar | /L 03- | 1 | |
| (2) | 986 561 924 01 | gasket set b-pillar | /R -02 | 1 | |
| (2) | 986 561 924 02 | gasket set b-pillar | /R- 03- | 1 | |
| 3 | 986 561 393 01 | gasket roof strut | | 1 | |
| 4 | 986 561 115 00 | retaining strip | /L | 1 | |
| (4) | 986 561 116 00 | retaining strip | /R | 1 | |
| 5 | 900 067 378 09 | pan-head screw | | X | |
| 6 | 999 919 139 09 | pan-head screw | | X | |
| 7 | 999 919 144 09 | oval-head screw | | 2 | |
| 8 | 986 561 501 01 | retaining strip | | 1 | |

| Model | Year | MG | SG | Illustration | Restrictions | UPD | 18:34 | 30.07.2008 | PET |
|---|---|---|---|---|---|---|---|---|---|
| 986 | 2004 | 8 | 11 | 811-12 | | 229 | | | |

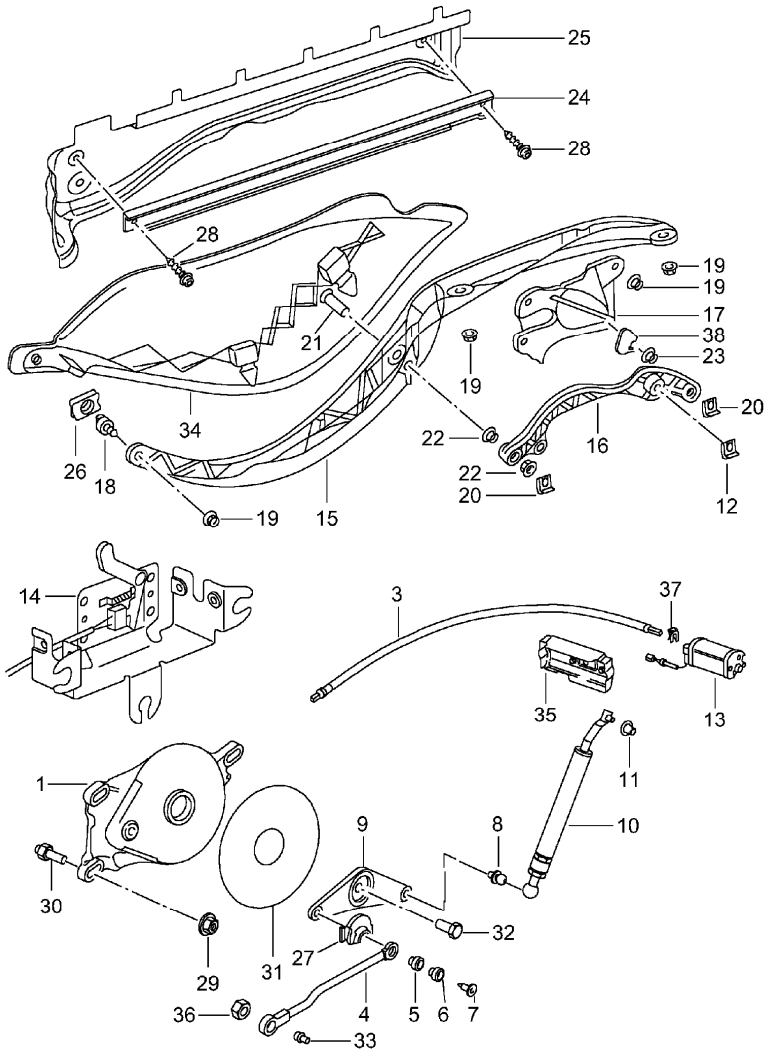


| Pos | Part Number | Description | Remark | Qty | Model |
|---|---|---|---|---|---|
| | | driving mechanism<br>convertible top<br>convertible top compartm.<br>lid | | | |
| 1 | 986 561 179 02 | transmission | /L -99 | 1 | |
| 1 | 986 561 179 03 | transmission | /L 00- | 1 | |
| 1 | 986 561 180 02 | transmission | /R -99 | 1 | |
| 1 | 986 561 180 03 | transmission | /R 00- | 1 | |
| 3 | 986 561 717 03 | pliable shaft | | 2 | |
| 4 | 986 561 279 02 | push rod | | 2 | |
| 5 | 999 924 039 00 | bush | | 2 | |
| 6 | 986 561 779 00 | spacer sleeve | | 2 | |
| 7 | 900 249 054 09 | countersunk-head screw | | 2 | |
| 8 | 986 561 689 00 | ball pin | | 2 | |
| 9 | 986 561 479 01 | lever | /L | 1 | |
| 9 | 986 561 480 01 | lever | /R | 1 | |
| 10 | 986 561 579 00 | push rod | /L | 1 | |
| 10 | 986 561 580 00 | push rod | /R | 1 | |
| 11 | 999 924 126 00 | bush | | 2 | |
| 12 | 999 166 075 02 | lock | | 2 | |
| 13 | 986 624 117 00 | electric motor | -03 | 1 | |
| 13 | 986 624 117 01 | electric motor | 04- | 1 | |
| 14 | 986 613 767 01 | microswitch<br>with<br>support | | 1<br><br>1 | |
| (14) | 986 624 299 00 | support<br>without<br>microswitch | | 1 | |
| 15 | 986 561 551 01 | guide arm | /L | 1 | |
| | GRV | prime coated | | | |
| (15) | 986 561 552 01 | guide arm | /R | 1 | |
| | GRV | prime coated | | | |

| Pos | Part Number | Description | Remark | Qty | Model |
|---|---|---|---|---|---|
| 16 | 986 561 571 01 | hinge lever | /L | 1 | |
| | GRV | prime coated | | | |
| 16 | 986 561 572 01 | hinge lever | /R | 1 | |
| | GRV | prime coated | | | |
| 17 | 986 561 679 00 | bearing bracket | /L | 1 | |
| | GRV | prime coated | | | |
| 17 | 986 561 680 00 | bearing bracket | /R | 1 | |
| | GRV | prime coated | | | |
| 18 | 986 561 677 00 | ball pin | | 1 | |
| 19 | 900 377 010 09 | hexagon nut | | 12 | |
| 20 | 999 166 075 02 | lock | | 4 | |
| (20) | 986 561 873 00 | lock | | 2 | |
| 21 | 999 088 027 30 | bolt | | 2 | |
| 22 | 999 924 049 01 | bush | | 4 | |
| 23 | 999 924 069 00 | bush | | 2 | |
| 24 | 986 561 253 01 | guide rail | /L | 1 | |
| 24 | 986 561 254 01 | guide rail | /R | 1 | |
| 25 | 986 561 761 02 | water drain plate | /L | 1 | |
| | GRV | prime coated | | | |
| 25 | 986 561 762 02 | water drain plate | /R | 1 | |
| | GRV | prime coated | | | |
| 26 | 986 561 577 01 | slide | | 2 | |
| 27 | 986 561 881 00 | rubber bush | | 2 | |
| 28 | 900 067 379 09 | pan-head screw | | 4 | |
| 29 | 999 076 055 09 | hexagon nut | | 6 | |
| 30 | 986 561 789 00 | spacer bolt | -99 | 6 | |
| 30 | 986 561 789 01 | spacer bolt | 00- | 6 | |
| 31 | 986 561 589 03 | washer | | 2 | |
| 32 | 999 217 095 02 | hexagon-head bolt | | 2 | |

| Pos | Part Number | Description | Remark | Qty | Model |
|---|---|---|---|---|---|
| 33 | 986 561 879 00 | ball pin<br>use also: | | 2 | |
| -- | N 011 118 11 | nut | | 2 | |
| 34 | 986 561 445 02 | trim cover | /L -02 | 1 | |
| | 01C | black | | | |
| (34) | 986 561 446 02 | trim cover | /R -02 | 1 | |
| | 01C | black | | | |
| 34 | 986 561 445 03 | trim cover | 03- | 1 | |
| (34) | 986 561 446 03 | trim cover | 03- | 1 | |
| 35 | 986 624 295 00 | trim cover | | 1 | |
| 36 | N 011 118 11 | nut | | 2 | |
| 37 | 911 561 643 65 | spring clamp | | 2 | |
| 38 | 986 561 657 00 | connection piece | | 2 | |

| Model | Year | MG | SG | Illustration | Restrictions | UPD | 18:34 | 30.07.2008 | PET |
|---|---|---|---|---|---|---|---|---|---|
| 986 | 2004 | 8 | 11 | 811-13 | | 229 | | | |

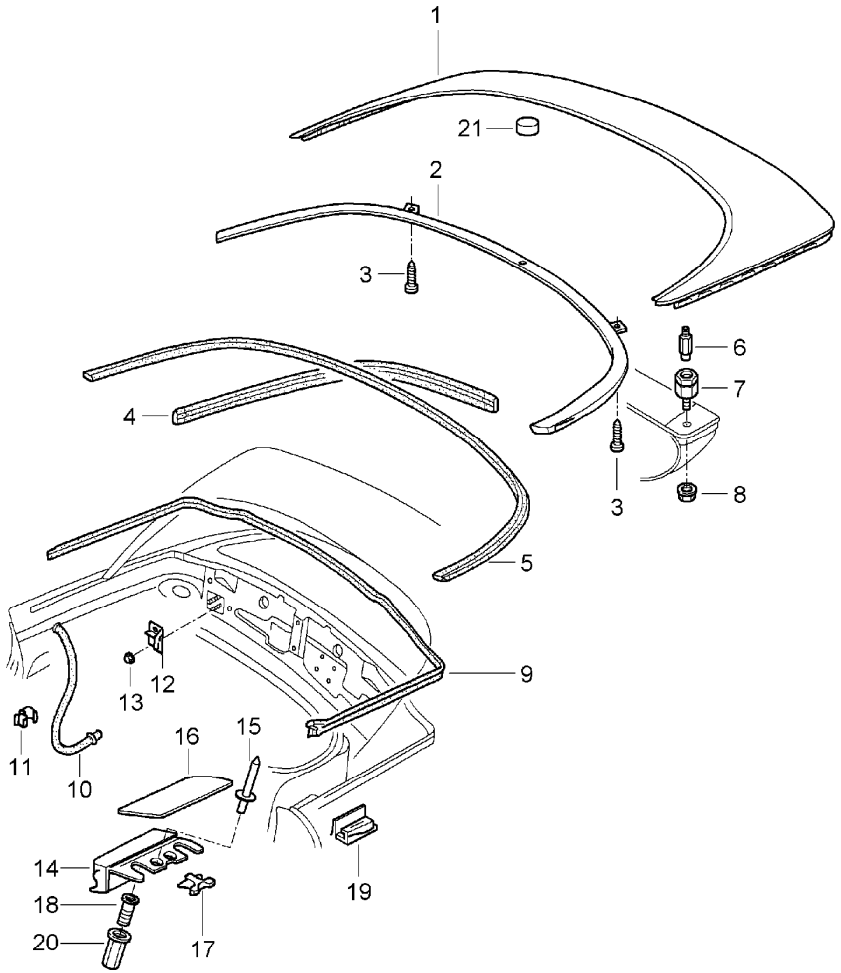


| Pos | Part Number | Description | Remark | Qty | Model |
|---|---|---|---|---|---|
| | | convertible top compartm.<br>lid<br>gaskets | | | |
| 1 | 986 514 011 01 | lid | | 1 | |
| | GRV | prime coated | | | |
| 2 | 986 514 631 00 | sealing strip | | 1 | |
| 3 | 999 073 047 02 | tapping screw | | 2 | |
| 4 | 986 514 714 01 | edge protection | | 2 | |
| 5 | 986 514 731 00 | gasket | | 1 | |
| 6 | 986 514 253 01 | centring journal | | 2 | |
| 7 | 986 514 251 01 | base | | 2 | |
| 8 | 999 076 061 09 | hexagon nut | | 4 | |
| 9 | 986 514 211 01 | gasket | | 1 | |
| 10 | 986 514 241 00 | water drain hose | /L | 2 | |
| 11 | 999 507 551 09 | cable clamp | | 4 | |
| (12) | 986 561 505 00 | support | | 2 | |
| 13 | 999 084 629 09 | hexagon flat nut | | 4 | |
| 14 | 986 514 633 02 | sealing strip | /L | 1 | |
| 14 | 986 514 634 02 | sealing strip | /R | 1 | |
| 15 | 999 190 445 37 | rivet | | 4 | |
| 16 | 986 504 861 00 | cover | /L | 1 | |
| | G2X | prime coated | | | |
| 16 | 986 504 862 00 | cover | /R | 1 | |
| | G2X | prime coated | | | |
| 17 | 986 504 833 00 | clamp | | 2 | |
| 18 | 996 504 855 01 | mounting | | 4 | |
| 19 | 986 561 407 02 | stop | /L | 1 | |
| (19) | 986 561 408 02 | stop | /R | 1 | |
| 20 | 999 500 084 02 | blind rivet nut | | 4 | |
| 21 | 986 561 633 01 | buffer | -97 | 5 | |

| Pos | Part Number | Description | Remark | Qty | Model | Pos | Part Number | Description | Remark | Qty | Model |
|---|---|---|---|---|---|---|---|---|---|---|---|
| 21 | 986 561 633 01 | buffer<br>3000X19 MM | 98- | 5 | | | | | | | |

| Model | Year | MG | SG | Illustration | Restrictions | UPD | 18:34 | 30.07.2008 |
|---|---|---|---|---|---|---|---|---|
| 986 | 2004 | 8 | 11 | 811-15 | | 229 | | |

PORSCHE PET PORSCHE

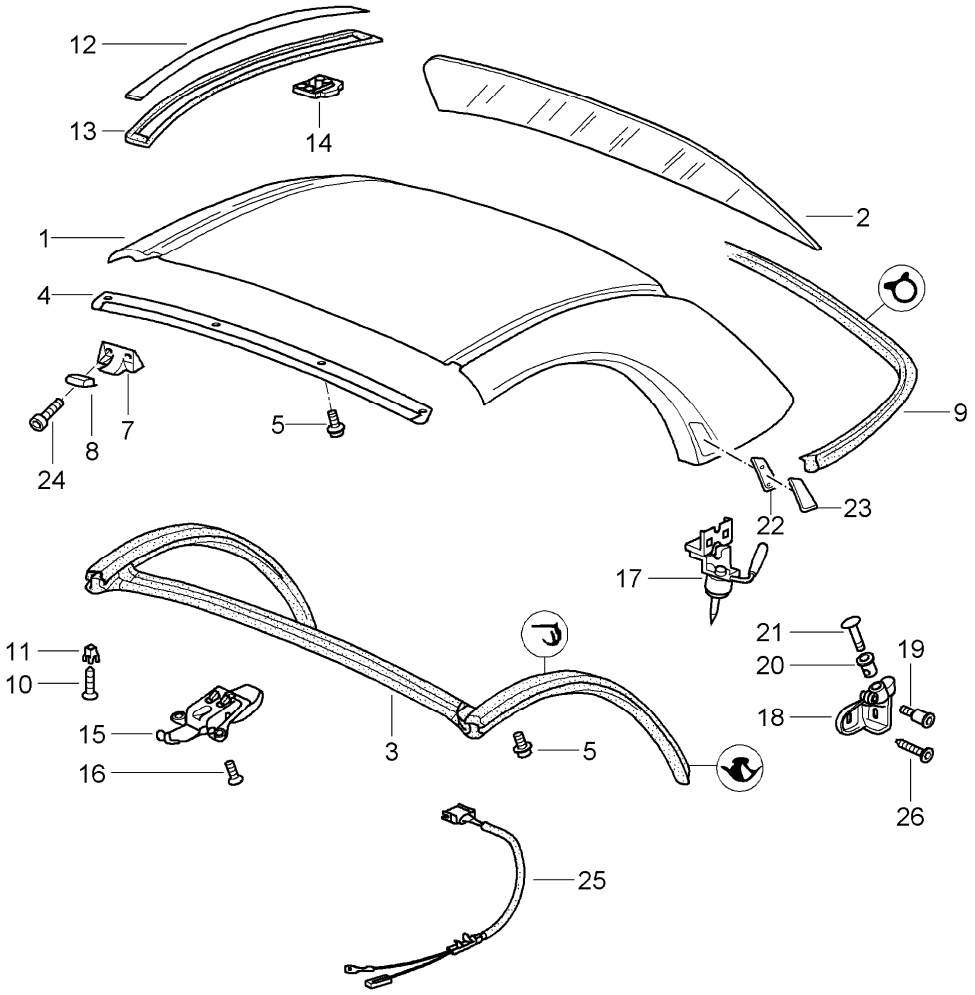


| Pos | Part Number | Description | Remark | Qty | Model |
|---|---|---|---|---|---|
| | | hardtop<br>accessories<br>gaskets | | | M 550 |
| 1 | 986 563 911 01 | hardtop | 97 | 1 | |
| | GRV | prime coated<br>without<br>accessories | | | |
| 1 | 986 563 911 03 | hardtop | 98- | 1 | |
| | GRV | prime coated<br>without<br>accessories | | | |
| 2 | 986 563 091 01 | rear window<br>ready for installation | | 1 | |
| 2 | 986 563 091 02 | rear window<br>ready for installation | | 1 | M 008 |
| 3 | 986 563 025 01 | gasket | | 1 | |
| 4 | 986 563 319 01 | retaining strip | | 1 | |
| 5 | 900 067 378 09 | pan-head screw | | 10 | |
| - | 000 043 203 29 | sealing strap<br>NITTO | | X | |
| 7 | 986 561 605 00 | centring journal | | 2 | |
| | A09 | black | | | |
| 8 | 986 563 625 03 | cap | | 2 | |
| 9 | 986 563 027 01 | gasket | | 1 | |
| 10 | 999 073 049 02 | tapping screw | | 14 | |
| 11 | 999 507 547 40 | expander nut | | 22 | |
| 12 | 986 563 707 00 | cover strip | /L | 1 | |
| | GRV | prime coated | | | |
| (12) | 986 563 708 00 | cover strip | /R | 1 | |
| | GRV | prime coated | | | |
| 13 | 986 563 361 00 | gasket | /L | 1 | |
| (13) | 986 563 362 00 | gasket | /R | 1 | |
| 14 | 986 563 721 00 | clip | | 8 | |

| Pos | Part Number | Description | Remark | Qty | Model |
|---|---|---|---|---|---|
| 15 | 996 563 401 00 | catch | | 1 | |
| 16 | 900 249 055 09 | countersunk-head screw<br>M 6X20 | | 3 | |
| 17 | 986 563 403 02 | catch | /L | 1 | |
| (17) | 986 563 404 02 | catch<br>use also: | /R | 1 | |
| -- | 900 067 378 09 | pan-head screw<br>micro-self-locking | | 2 | |
| 18 | 986 561 653 04 | mounting | /L | 1 | |
| (18) | 986 561 654 04 | mounting | /R | 1 | |
| 19 | 999 219 041 00 | fit bolt | | 2 | |
| 20 | 986 563 713 02 | insert | /L | 1 | |
| (20) | 986 563 714 02 | insert | /R | 1 | |
| 21 | 986 561 655 00 | cap | | 2 | |
| 22 | 986 563 341 01 | mounting | /L | 1 | |
| (22) | 986 563 342 01 | mounting | /R | 1 | |
| 23 | 986 563 803 01 | trim cover | /L | 1 | |
| | G2X | prime coated | | | |
| 23 | 986 563 804 01 | trim cover | /R | 1 | |
| | G2X | prime coated | | | |
| 24 | 900 119 122 09 | pan-head screw | | 6 | |
| 25 | 986 612 081 01 | wiring harness | | 1 | |
| 26 | 999 073 150 09 | lens-head screw | | 4 | |
| -- | 986 563 309 00 | retaining strip | /L | 1 | |
| -- | 986 563 310 00 | retaining strip | /R | 1 | |
| -- | 986 563 021 00 | sealing strip | /L | 1 | |
| -- | 986 563 022 00 | sealing strip | /R | 1 | |
| -- | 999 703 447 40 | buffer | | 3 | |

| Pos | Part Number | Description | Remark | Qty | Model |
|---|---|---|---|---|---|

| Model | Year | MG | SG | Illustration | Restrictions | UPD | 18:35 | 30.07.2008 | PET |
|---|---|---|---|---|---|---|---|---|---|
| 986 | 2004 | 8 | 11 | 811-16 | | 229 | | | |

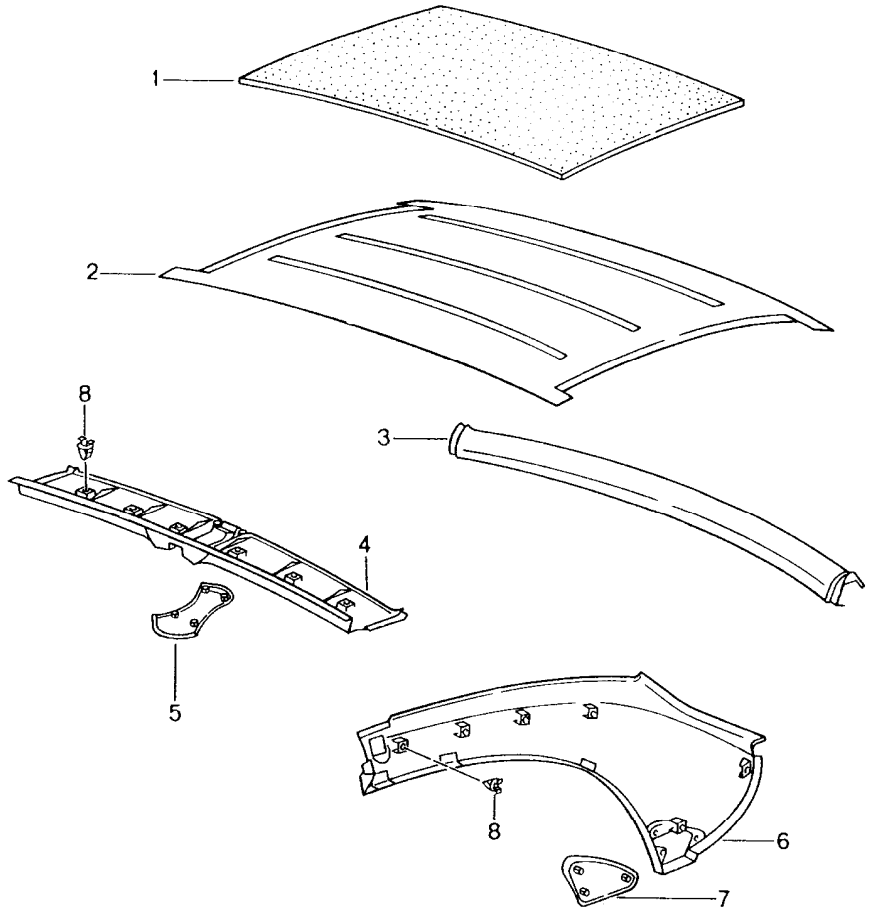


| Pos | Part Number | Description | Remark | Qty | Model |
|---|---|---|---|---|---|
| | | hardtop<br>interior equipment | | | |
| 1 | 986 563 523 00 | sound absorber | | 1 | |
| 2 | 986 563 111 00 | lining | -00 | 1 | |
| | A10 | black | | | |
| 2 | 986 563 111 01 | lining | 01- | 1 | |
| | A21 | black | | | |
| 3 | 986 563 505 00 | lining | | 1 | |
| | B12 | black | | | |
| 4 | 986 563 501 00 | lining | | 1 | |
| | B12 | black | | | |
| 5 | 986 563 551 00 | lid | | 1 | |
| | B12 | black | | | |
| 6 | 986 563 503 00 | lining | /L | 1 | |
| | B12 | black | | | |
| (6) | 986 563 504 00 | lining | /R | 1 | |
| | B12 | black | | | |
| 7 | 986 563 553 00 | lid | /L | 1 | |
| | B12 | black | | | |
| (7) | 986 563 554 00 | lid | /R | 1 | |
| | B12 | black | | | |
| 8 | 999 507 764 40 | clamp | | X | |

| Model | Year | MG | SG | Illustration | Restrictions | UPD | 18:35 | 30.07.2008 |
|---|---|---|---|---|---|---|---|---|
| 986 | 2004 | 8 | 12 | 812-00 | | 229 | | |

PORSCHE PET PORSCHE

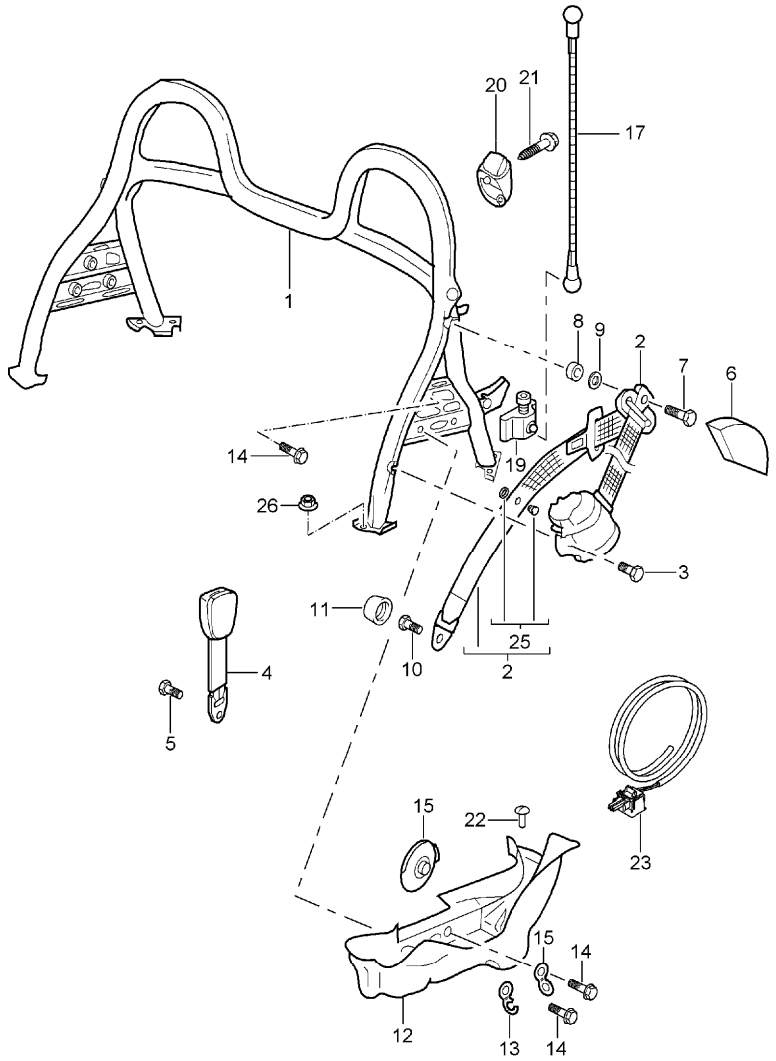


| Pos | Part Number | Description | Remark | Qty | Model |
|---|---|---|---|---|---|
| | | roll-over bar | | | |
| | | seat belt | | | |
| 1 | 986 580 011 01 | roll-over bar | | 1 | |
| | 70C | black | | | |
| 2 | 986 803 033 02 | seat belt | /L -01 | 1 | |
| 2 | 986 803 033 03 | seat belt | /L 02- | 1 | |
| 2 | 986 803 982 01 | seat belt | /L 02- | 1 | |
| | V02 | speed yellow | | | |
| | H03 | maritime blue | | | |
| | N13 | guards red | | | |
| (2) | 986 803 034 02 | seat belt | /R -01 | 1 | |
| (2) | 986 803 034 04 | seat belt | /R 02- | 1 | |
| (2) | 986 803 983 02 | seat belt | /R 02- | 1 | |
| | V02 | speed yellow | | | |
| | H03 | maritime blue | | | |
| | N13 | guards red | | | |
| (2) | 986 803 034 05 | seat belt for child car seat | /R 02- | 1 | |
| (2) | 986 803 983 03 | seat belt for child car seat | /R 02- | 1 | |
| | V02 | speed yellow | | | |
| | H03 | maritime blue | | | |
| | N13 | guards red | | | |
| 3 | 911 803 150 00 | fastening screw | | 2 | |
| 4 | 996 803 183 04 | seat-belt buckle driver's side | | 1 | |
| 4 | 996 803 183 07 | seat-belt buckle driver's side | 02- | 1 | |
| 4 | 996 803 183 01 | seat-belt buckle passenger's side | -01 | 1 | |

| Pos | Part Number | Description | Remark | Qty | Model |
|---|---|---|---|---|---|
| 4 | 996 803 183 08 | seat-belt buckle<br>passenger's side | 02- | 1 | |
| 5 | 999 218 101 02 | fastening screw | | 2 | |
| 6 | 986 803 541 00 | cover | | 2 | |
| | 01C | black | | | |
| 7 | 914 803 468 10 | fastening screw | | 2 | |
| 8 | 999 924 064 02 | sleeve | | 2 | |
| 9 | 211 857 771 | washer | | 2 | |
| 10 | 803 019 811 B | fastening screw | | 2 | |
| 11 | 811 857 845 | cap | | 2 | |
| | 01C | black | | | |
| 12 | 986 561 805 03 | water drip pan | /L | 1 | |
| (12) | 986 561 806 03 | water drip pan | /R | 1 | |
| -- | 986 561 833 02 | water drain hose | | 1 | |
| -- | 986 561 834 02 | water drain hose | | 1 | |
| -- | N 900 685 01 | plastic nut | | 4 | |
| 16 | 986 561 589 03 | washer | | 2 | |
| 17 | 986 561 191 02 | tension rope | | 2 | |
| 19 | 986 561 917 00 | threaded plate | | 2 | |
| 20 | 986 580 131 01 | bracket | /L | 1 | |
| 20 | 986 580 132 01 | bracket | /R | 1 | |
| 21 | 999 073 060 02 | tapping screw | | 2 | |
| 22 | N 900 685 01 | plastic nut | | 4 | |
| -- | 986 580 513 00 | plate<br>roll-over bar<br>1 MM | | X | |
| -- | 986 580 613 00 | plate<br>roll-over bar<br>1 MM | | X | |
| -- | 000 043 300 07 | paint<br>metal grey<br>1L | | 1 | |

| Pos | Part Number | Description | Remark | Qty | Model |
|---|---|---|---|---|---|
| 23 | 996 612 991 10 | cable<br>driver's side<br>for<br>seat-belt tensioner | | X | |
| 23 | 996 612 991 00 | cable<br>passenger's side<br>for<br>seat-belt tensioner | | X | |
| 25 | 955 803 056 00 | knob | | 2 | |
| | HCP | black | | | |
| 26 | 999 076 065 02 | collar nut | | 8 | |

| Model | Year | MG | SG | Illustration | Restrictions | UPD | 18:35 | 30.07.2008 | PET |
|---|---|---|---|---|---|---|---|---|---|
| 986 | 2004 | 8 | 12 | 812-01 | | 229 | | | |

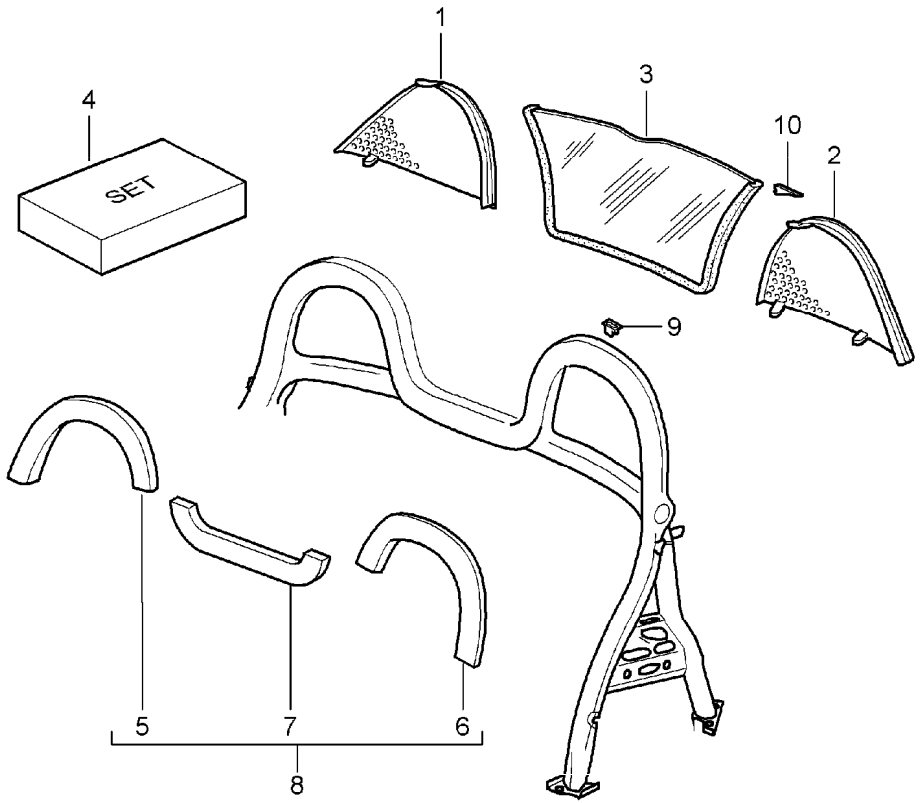


| Pos | Part Number | Description | Remark | Qty | Model |
|---|---|---|---|---|---|
| | | wind deflector<br>and<br>linings<br>roll-over bar | | | |
| 1 | 986 561 584 00 | wind deflector | /R | 1 | |
| | 01C | black | | | |
| 2 | 986 561 583 00 | wind deflector | /L | 1 | |
| | 01C | black | | | |
| 3 | A 986 561 321 00 | wind deflector | | 1 | |
| | 01C | black | | | |
| 3 | 986 561 321 01 | wind deflector | | 1 | |
| | 01C | black | | | |
| 4 | 986 561 323 00 | set of fastening parts<br>for<br>wind deflector | | 1 | |
| 5 | A 986 580 512 01 | lining | /R -97 | 1 | |
| | A11 | black | | | |
| | C51 | graphite grey | | | |
| | J31 | nephrite green | | | |
| | M31 | boxster red | | | |
| | S31 | savanna | | | |
| 5 | A 986 580 512 03 | lining<br>leather | /R 98- | 1 | |
| | A11 | black | | | |
| | C51 | graphite grey | | | |
| | J31 | nephrite green | | | |
| | M31 | boxster red | | | |
| | S31 | savanna | | | |
| 5 | A 986 580 512 07 | lining | /L 01- | 1 | |
| | A17 | black | | | |
| | C57 | graphite grey | | | |
| | D12 | dark green | | | |

| Pos | Part Number | Description | Remark | Qty | Model |
|---|---|---|---|---|---|
| | G17 | metropole blue | | | |
| | J37 | nephrite green | | | |
| | M37 | boxster red | | | |
| | P17 | cinnamon brown | | | |
| | S37 | savanna | | | |
| | T12 | brown/natural | | | |
| 6 | A 986 580 511 01 | lining<br>leather<br>black | /L -97 | 1 | |
| | C51 | graphite grey | | | |
| | J31 | nephrite green | | | |
| | M31 | boxster red | | | |
| | S31 | savanna | | | |
| 6 | A 986 580 511 03 | lining<br>leather<br>black | /L 98- | 1 | |
| | C51 | graphite grey | | | |
| | J31 | nephrite green | | | |
| | M31 | boxster red | | | |
| | S31 | savanna | | | |
| 6 | A 986 580 511 07 | lining<br>leather | /L- 01- | 1 | |
| | A17 | black | | | |
| | C57 | graphite grey | | | |
| | D12 | dark green | | | |
| | G17 | metropole blue | | | |
| | J37 | nephrite green | | | |
| | M37 | boxster red | | | |
| | P17 | cinnamon brown | | | |
| | S37 | savanna | | | |
| | T12 | brown/natural | | | |
| 7 | A 986 580 521 01 | lining<br>leather | -97 | 1 | |
| | A11 | black | | | |
| | C51 | graphite grey | | | |
| | S31 | savanna | | | |
| | J31 | nephrite green | | | |
| | M31 | boxster red | | | |
| 7 | A 986 580 521 05 | lining<br>leather | 98- | 1 | |
| | A11 | black | | | |
| | C51 | graphite grey | | | |
| | G11 | metropole blue | 98- | | |
| | S31 | savanna | | | |
| | J31 | nephrite green | | | |
| | M31 | boxster red | | | |
| 7 | A 986 580 521 05 | lining<br>leather | | 1 | |
| | A17 | black | | | |
| | C57 | graphite grey | | | |
| | D12 | dark green | | | |
| | G17 | metropole blue | | | |
| | J37 | nephrite green | | | |
| | M37 | boxster red | | | |
| | P17 | cinnamon brown | | | |
| | S37 | savanna | | | |
| | T12 | brown/natural | | | |
| 8 | 986 580 311 13 | set<br>linings<br>leatherette | | 1 | |
| | A12 | black | | | |
| | C52 | graphite grey | | | |

| Pos | Part Number | Description | Remark | Qty | Model |
|---|---|---|---|---|---|
| | G12 | metropole blue | | | |
| | J32 | nephrite green | | | |
| | S32 | savanna | | | |
| 8 | 986 580 311 16 | set<br>linings<br>leather | | 1 | |
| | A11 | black | | | |
| | C51 | graphite grey | | | |
| | D12 | dark grey/natural | | | |
| | G11 | metropole blue | | | |
| | J31 | nephrite green | | | |
| | M31 | boxster red | | | |
| | P12 | cinnamon brown | | | |
| | S31 | savanna | | | |
| | T12 | brown | | | |
| | 9V6 | cocoa | | | |
| 9 | 986 580 751 00 | clip | | 8 | |
| 10 | 986 561 737 00 | latch | | 1 | |
| | 01C | black | | | |
| (10) | 986 561 738 00 | latch | | 1 | |
| | 01C | black | | | |

| Pos | Part Number | Description | Remark | Qty | Model |
|---|---|---|---|---|---|

| Model | Year | MG | SG | Illustration | Restrictions | UPD | 18:35 | 30.07.2008 | PET |
|---|---|---|---|---|---|---|---|---|---|
| 986 | 2004 | 8 | 13 | 813-00 | | 229 | | | |

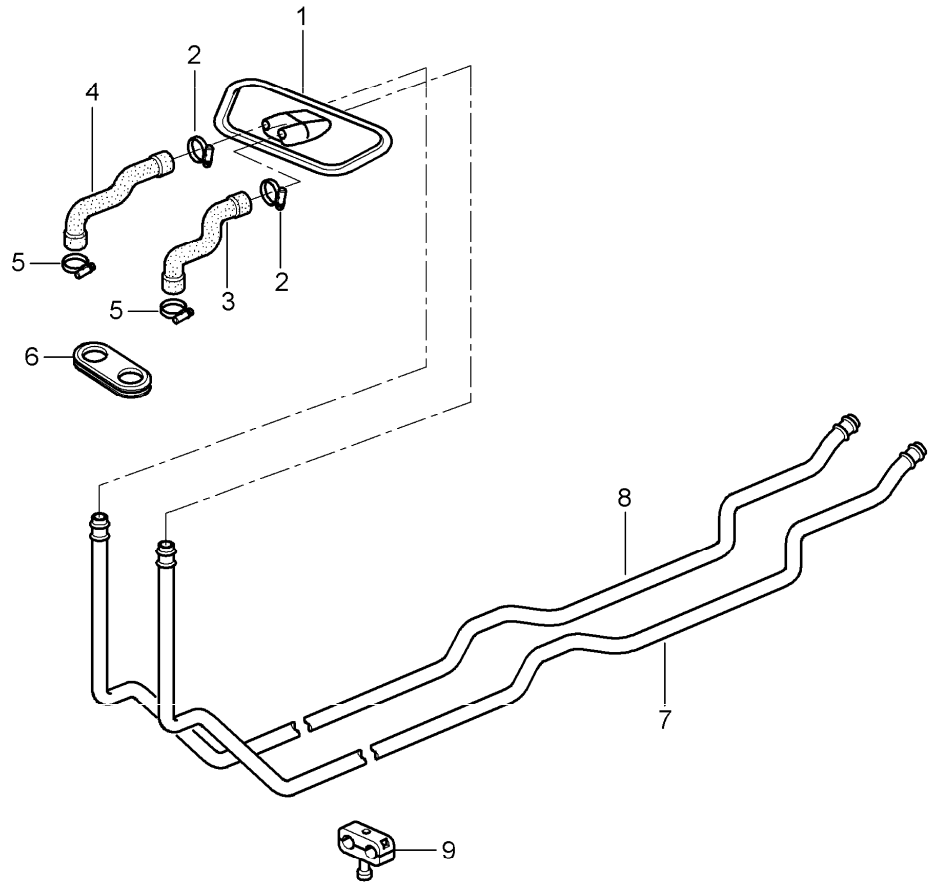


| Pos | Part Number | Description | Remark | Qty | Model |
|---|---|---|---|---|---|
| | | heating system 1<br>feed line<br>return line | | | |
| (1) | 996 572 263 02 | gasket | /LL | 1 | |
| (1) | 996 572 263 03 | gasket | /RL | 1 | |
| 2 | 999 512 441 02 | hose clamp | | 1 | |
| 3 | 996 572 585 00 | heater hose | | 1 | |
| (3) | 996 572 585 01 | heater hose | | 1 | |
| 4 | 996 572 583 00 | heater hose | | 1 | |
| (4) | 996 572 583 01 | heater hose | | 1 | |
| 5 | 999 512 441 02 | hose clamp | | 1 | |
| 6 | 996 572 765 01 | grommet | | 1 | |
| 7 | 986 572 683 01 | hot air duct | | 1 | |
| 8 | 986 572 681 01 | hot air duct<br>supply | | 1 | |
| 9 | 999 511 230 40 | cable holder | | 4 | |
| -- | 999 511 232 41 | rubber mounting | | 4 | |

| Model | Year | MG | SG | Illustration | Restrictions | UPD | 18:35 | 30.07.2008 |
|---|---|---|---|---|---|---|---|---|
| 986 | 2004 | 8 | 13 | 813-01 | | 229 | | |

PORSCHE PET PORSCHE

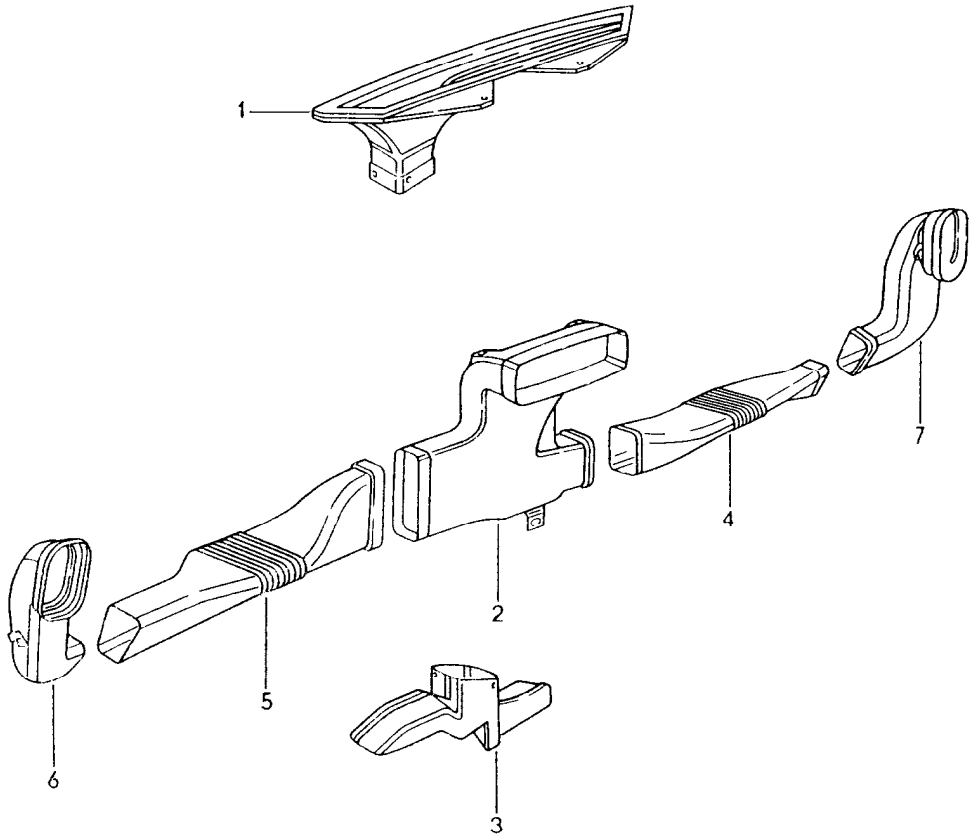


| Pos | Part Number | Description | Remark | Qty | Model |
|---|---|---|---|---|---|
| | | heating<br>air distributor | | | |
| 1 | 996 572 631 00 | defroster vent | /LL | 1 | |
| (1) | 996 572 631 01 | defroster vent | /RL | 1 | |
| 2 | 996 572 171 00 | air distributor | /LL -02 | 1 | |
| (2) | 996 572 171 04 | air distributor | /LL 03- | 1 | |
| (2) | 996 572 171 01 | air distributor | /RL -02 | 1 | |
| (2) | 996 572 171 05 | air distributor | /RL 03- | 1 | |
| 3 | 996 572 793 02 | footwell outlet vent | /LL | 1 | |
| (3) | 996 572 793 04 | footwell outlet vent | /LL | 1 | M680 |
| (3) | 996 572 793 01 | footwell outlet vent | /RL -02 | 1 | |
| (3) | 996 572 793 05 | footwell outlet vent | /RL 03- | 1 | |
| (3) | 996 572 793 06 | footwell outlet vent | /RL 03- | 1 | M680 |
| 4 | 996 572 464 02 | air duct | /LL /R | 1 | |
| (4) | 996 572 464 00 | air duct | /RL /R | 1 | |
| 5 | 996 572 463 00 | air duct | /LL /L | 1 | |
| (5) | 996 572 463 02 | air duct | /RL /L | 1 | |
| 6 | 996 572 767 00 | air duct | /LL /L | 1 | |
| (6) | 996 572 767 01 | air duct | /RL /L | 1 | |
| 7 | 996 572 768 00 | air duct | /RL /R | 1 | |
| (7) | 996 572 768 01 | air duct | /LL /R | 1 | |

| Model | Year | MG | SG | Illustration | Restrictions | UPD | 18:36 | 30.07.2008 | PORSCHE PET PORSCHE |
|---|---|---|---|---|---|---|---|---|---|
| 986 | 2004 | 8 | 13 | 813-05 | | 229 | | | |

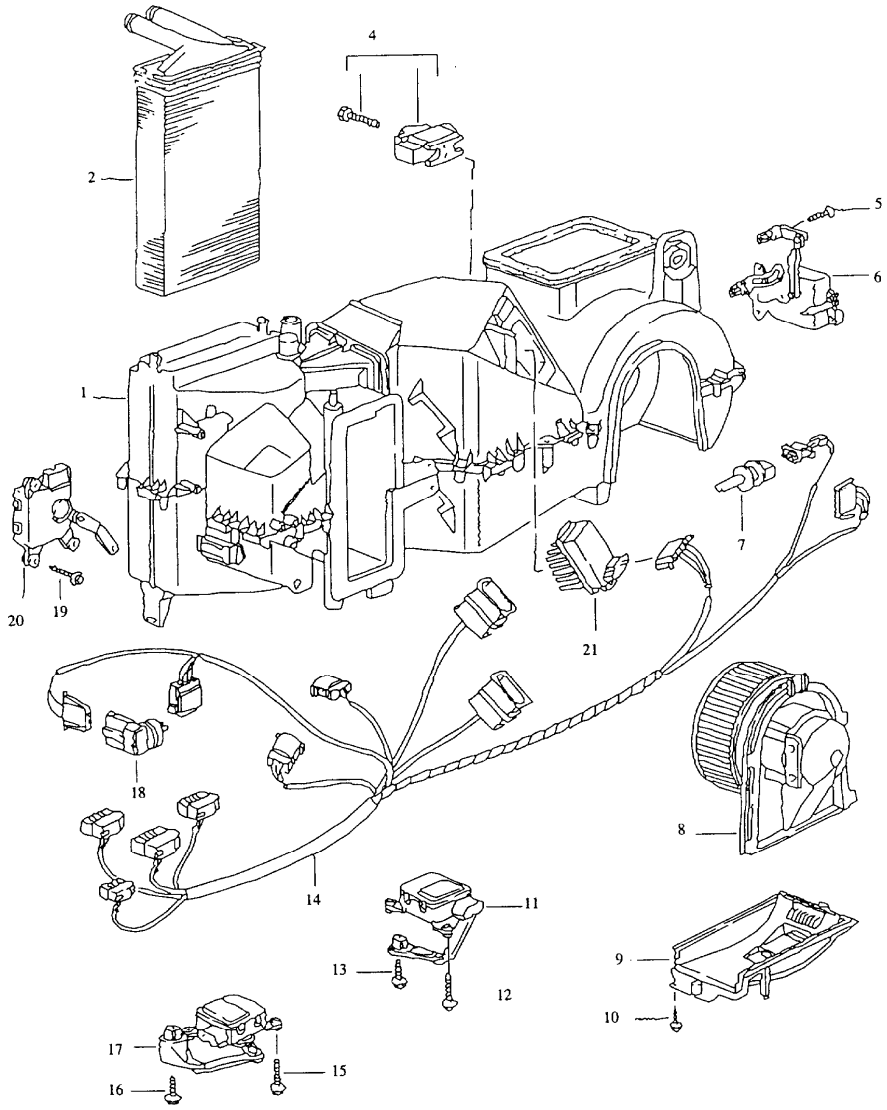


| Pos | Part Number | Description | Remark | Qty | Model |
|---|---|---|---|---|---|
| | | air conditioner<br>single parts | | | M 573 |
| 1 | 996 573 901 02 | air conditioner | /LL | 1 | |
| 1 | 996 573 901 01 | air conditioner<br>without<br>heat exchanger<br>with<br>evaporator | /RL | 1 | |
| 2 | 996 572 129 00 | heat exchanger | | 1 | |
| 4 | 996 573 929 01 | expansion valve | | 1 | |
| 5 | 900 143 102 02 | tapping screw | | 2 | |
| 6 | 996 573 915 00 | electric motor<br>central valve | /LL | 1<br>1 | |
| 6 | 996 573 915 01 | electric motor<br>central valve | /RL | 1 | |
| 7 | 1J0 907 543 B | temperature sensor | | 1 | |
| 8 | 996 572 903 02 | blower<br>use also: | /LL -99 | 1 | |
| -- | 000 043 300 99 | parts kit | | 1 | |
| 8 | 996 624 107 01 | blower | /LL 00- | 1 | |
| 8 | 996 572 903 03 | blower<br>use also: | /RL -99 | 1 | |
| -- | 000 043 300 99 | parts kit | | 1 | |
| 8 | 996 624 108 01 | blower | /RL 00- | 1 | |
| 9 | 996 573 905 00 | lid | | 1 | |
| 10 | 900 143 102 02 | hexagon-head bolt | | 1 | |
| 11 | 996 573 919 00 | electric motor<br>temperature valve | /LL | 1 | |
| 11 | 996 573 919 01 | electric motor<br>temperature valve | /RL<br>-10 03 | 1 | |
| 11 | 996 573 919 03 | electric motor<br>temperature valve<br>identification<br>red | /RL<br>10- 03 | 1 | |
| 12 | 900 143 102 02 | hexagon-head bolt | | 1 | |
| 13 | 900 143 102 02 | hexagon-head bolt | | 1 | |

| Pos | Part Number | Description | Remark | Qty | Model |
|---|---|---|---|---|---|
| 14 | 996 612 047 00 | wiring harness | /LL -98 | 1 | |
| 14 | 996 612 047 01 | wiring harness | /LL 99- | 1 | |
| 14 | 996 622 047 00 | wiring harness | 01- | 1 | |
| (14) | 996 612 048 00 | wiring harness | /RL -98 | 1 | |
| (14) | 996 612 048 01 | wiring harness | /RL 99- | 1 | |
| (14) | 996 622 048 00 | wiring harness | /RL 01- | 1 | |
| 15 | 900 143 102 02 | hexagon-head bolt | | 1 | |
| 16 | 900 143 102 02 | hexagon-head bolt | | 1 | |
| 17 | 996 573 917 00 | electric motor<br>defroster flap<br>green | /LL | 1 | |
| (17) | 996 573 917 01 | electric motor<br>defroster flap | /RL<br>-10 03 | 1 | |
| (17) | 996 573 917 03 | electric motor<br>defroster flap<br>identification<br>green | /RL<br>10- 03 | 1 | |
| 18 | 1H0 907 543 A | temperature sensor | | 1 | |
| 19 | 900 143 102 02 | hexagon-head bolt | | 1 | |
| 20 | 996 573 921 00 | electric motor<br>air flow sensor plate<br>yellow | /LL | 1 | |
| (20) | 996 573 921 01 | electric motor<br>air flow sensor plate<br>yellow | /RL | 1 | |
| 21 | 996 573 923 00 | resistor | | 1 | |
| -- | 996 573 925 00 | intake air temper. sensor | | 1 | |
| -- | 996 573 927 00 | blower outlet sensor | | 1 | |
| -- | 996 572 511 02 | sound absorber | /LL -02 | 1 | |
| -- | 996 572 511 04 | sound absorber | /LL 03- | 1 | |
| -- | 996 572 511 03 | sound absorber | /RL -02 | 1 | |
| -- | 996 572 511 05 | sound absorber | /RL 03- | 1 | |
| -- | 1H0 819 943 | screw | | 2 | |

| Pos | Part Number | Description | Remark | Qty | Model |
|---|---|---|---|---|---|

| Model | Year | MG | SG | Illustration | Restrictions | UPD | 18:36 | 30.07.2008 | PET |
|---|---|---|---|---|---|---|---|---|---|
| 986 | 2004 | 8 | 13 | 813-06 | | 229 | | | |

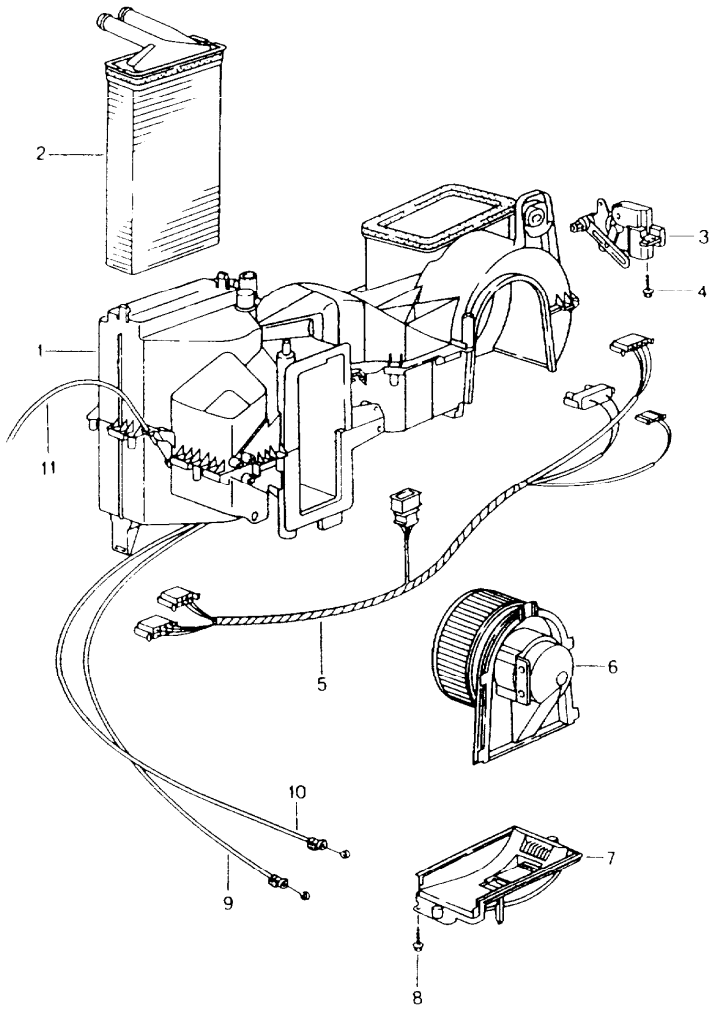


| Pos | Part Number | Description | Remark | Qty | Model |
|---|---|---|---|---|---|
| | | heater<br>single parts | | | |
| 1 | 996 572 901 00 | housing | /LL | 1 | |
| (1) | 996 572 901 01 | housing | /RL | 1 | |
| 2 | 996 572 129 00 | heat exchanger | | 1 | |
| 3 | 996 572 915 00 | electric motor | | 1 | |
| 4 | 999 919 049 02 | tapping screw | | 1 | |
| 5 | 996 612 045 00 | wiring harness | /LL -98 | 1 | |
| 5 | 996 612 045 01 | wiring harness | /LL 99- | 1 | |
| (5) | 996 612 046 00 | wiring harness | /RL -98 | 1 | |
| (5) | 996 612 046 01 | wiring harness | /RL | 1 | |
| 6 | 996 572 903 02 | blower<br>use also: | /LL -99 | 1 | |
| -- | 000 043 300 99 | parts kit | -99 | 1 | |
| (6) | 996 572 903 03 | blower<br>use also: | /RL -99 | 1 | |
| -- | 000 043 300 99 | parts kit | -99 | 1 | |
| 7 | 996 572 905 00 | lid<br>with<br>resistor | | 1 | |
| 8 | 999 919 049 02 | tapping screw | | 2 | |
| 9 | 996 572 605 00 | traction<br>defroster | /LL | 1 | |
| 9 | 996 572 605 01 | traction<br>defroster | /RL | 1 | |
| 10 | 996 572 607 00 | traction<br>temperature valve | /LL | 1 | |
| 10 | 996 572 607 01 | traction<br>temperature valve | /RL | 1 | |
| 11 | 996 572 601 00 | traction<br>central valve | /LL | 1 | |
| 11 | 996 572 601 01 | traction<br>central valve | /RL | 1 | |

| Pos | Part Number | Description | Remark | Qty | Model | Pos | Part Number | Description | Remark | Qty | Model |
|---|---|---|---|---|---|---|---|---|---|---|---|
| -- | 996 572 913 00 | gasket<br>for<br>heat exchanger | | 1 | | | | | | | |

| Model | Year | MG | SG | Illustration | Restrictions | UPD | 18:36 | 30.07.2008 | PET |
|---|---|---|---|---|---|---|---|---|---|
| 986 | 2004 | 8 | 13 | 813-10 | | 229 | | | |

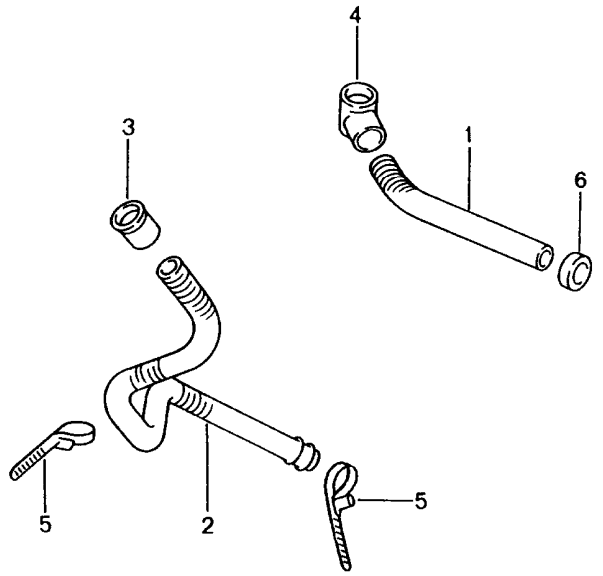


| Pos | Part Number | Description | Remark | Qty | Model |
|---|---|---|---|---|---|
| | | water drain tube<br>mount<br>heater<br>air conditioner | | | |
| 1 | 996 504 643 00 | water drain tube | | 1 | |
| 2 | 996 504 644 00 | water drain tube | | 1 | |
| 3 | 996 504 645 00 | grommet | | 1 | |
| 4 | 996 504 646 00 | grommet | | 1 | |
| 5 | 999 513 049 40 | tie-wrap | | 1 | |
| 6 | 999 702 156 40 | grommet | | 1 | |
| -- | 996 573 797 02 | connecting piece | | 1 | |
| -- | 996 573 795 01 | grommet | | 1 | |
| -- | 996 573 793 01 | pipe | /LL | 1 | |
| -- | 996 573 794 01 | pipe | /RL | 1 | |

| Model | Year | MG | SG | Illustration | Restrictions | UPD | 18:36 | 30.07.2008 |
|---|---|---|---|---|---|---|---|---|
| 986 | 2004 | 8 | 13 | 813-15 | | 229 | | |

PORSCHE PET PORSCHE

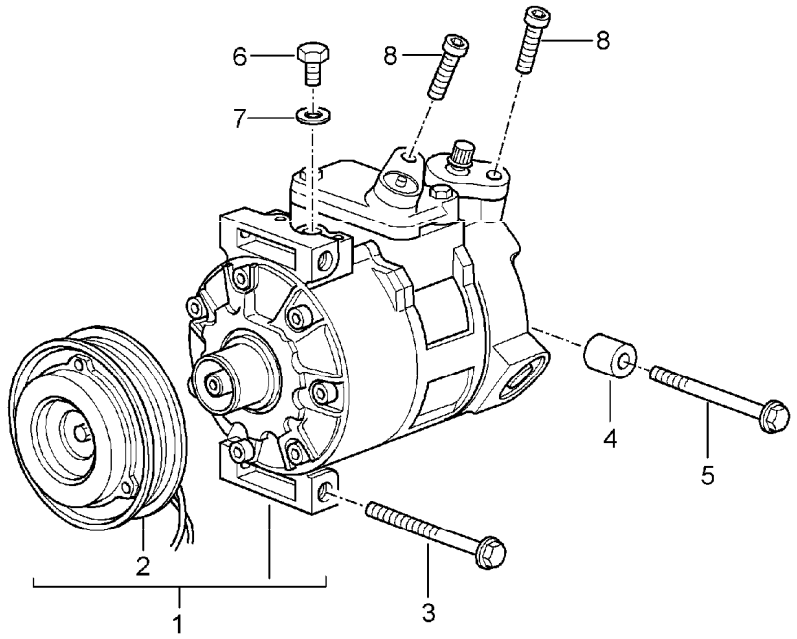


| Pos | Part Number | Description | Remark | Qty | Model |
|---|---|---|---|---|---|
| | | compressor | | | |
| 1 | 996 126 011 52 | compressor | | 1 | |
| 2 | 996 573 926 00 | magnetic clutch | | 1 | |
| 3 | 900 378 075 09 | hexagon-head bolt<br>M 8X90 | | 1 | |
| 4 | 996 126 102 52 | spacer sleeve | | 1 | |
| 5 | 900 378 136 09 | hexagon-head bolt<br>M 8X120 | | 1 | |
| 6 | 996 573 926 01 | hexagon-head bolt | | 1 | |
| 7 | 996 573 926 02 | sealing ring | | 1 | |
| 8 | 900 067 252 02 | pan-head screw | | 2 | |
| -- | 996 126 101 51 | bracket | | 1 | |

| Model | Year | MG | SG | Illustration | Restrictions | UPD | 18:36 | 30.07.2008 | PET |
|---|---|---|---|---|---|---|---|---|---|
| 986 | 2004 | 8 | 13 | 813-20 | | 229 | | | |

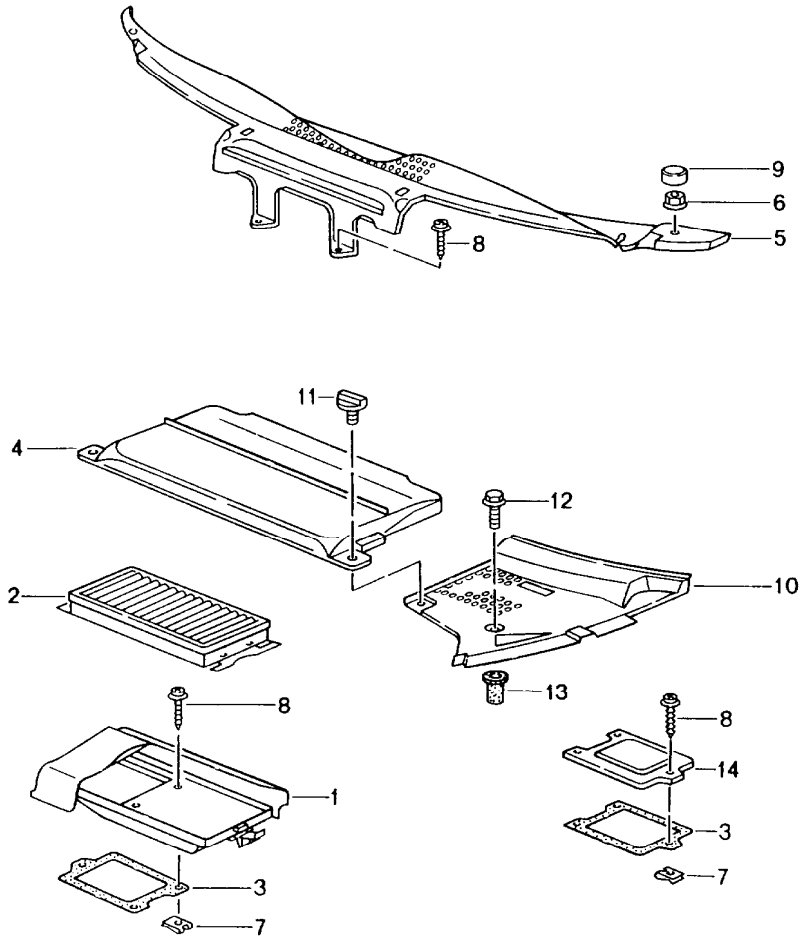


| Pos | Part Number | Description | Remark | Qty | Model |
|---|---|---|---|---|---|
| | | particle filter<br>cowl panel covering | | | |
| 1 | 996 572 029 01 | housing | | 1 | |
| 1 | 996 572 019 02 | housing | /LL | 1 | |
| 1 | 996 572 019 03 | housing | /RL | 1 | |
| 2 | 996 572 219 01 | particle filter | | 1 | |
| 2 | 996 571 219 03 | particle filter | | 1 | M 571 |
| 3 | 996 572 221 01 | gasket | | 1 | |
| 4 | 996 572 567 01 | cover | | 1 | |
| | 01C | black<br>battery | | | |
| (4) | 996 572 729 00 | cover<br>particle filter | /LL | 1 | |
| (4) | 996 572 729 02 | cover<br>particle filter | /RL 97 | 1 | |
| (4) | 996 572 729 02 | cover<br>particle filter | /RL 98- | 1 | |
| 5 | 996 572 563 02 | cowl panel covering | /LL -00 | 1 | |
| | 01C | black | | | |
| 5 | 996 572 563 06 | cowl panel covering | /LL 01- | 1 | |
| | 01C | black | | | |
| | | use also: | | | |
| - | 996 572 931 00 | gasket | | 1 | |
| 5 | 996 572 563 03 | cowl panel covering | /RL -00 | 1 | |
| | 01C | black | | | |
| 5 | 996 572 563 07 | cowl panel covering | /RL 01- | 1 | |
| | 01C | black | | | |
| | | use also: | | | |
| - | 996 572 931 00 | gasket | | 1 | |
| 6 | 999 049 008 40 | plastic nut | | 2 | |
| 7 | 999 591 722 02 | speed nut | | 3 | |

| Pos | Part Number | Description | Remark | Qty | Model |
|---|---|---|---|---|---|
| 8 | 999 073 142 09 | combination tapping screw | | 3 | |
| 9 | 996 572 569 00 | cap | -00 | 2 | |
| | 01C | black | | | |
| (9) | 996 572 569 01 | cap | /L 01- | 1 | |
| | 01C | black | | | |
| (9) | 996 572 570 01 | cap | /R 01- | 1 | |
| | 01C | black | | | |
| 10 | 996 572 561 01 | cover | /L | 1 | |
| | 01C | black | | | |
| (10) | 996 572 562 01 | cover | /R | 1 | |
| | 01C | black | | | |
| 11 | 999 590 045 40 | screw plug | | X | |
| - | 999 590 046 40 | disc cam | | X | |
| 12 | 999 073 143 09 | oval-head screw | | 2 | |
| 13 | 999 500 092 00 | nut | | 2 | |
| 14 | 996 572 719 01 | lid | -03 | 1 | |
| 14 | 996 572 719 02 | lid | 04 | 1 | |

| Pos | Part Number | Description | Remark | Qty | Model |
|---|---|---|---|---|---|

| Model | Year | MG | SG | Illustration | Restrictions | UPD | 18:37 | 30.07.2008 | PET |
|---|---|---|---|---|---|---|---|---|---|
| 986 | 2004 | 8 | 13 | 813-25 | | 229 | | | |

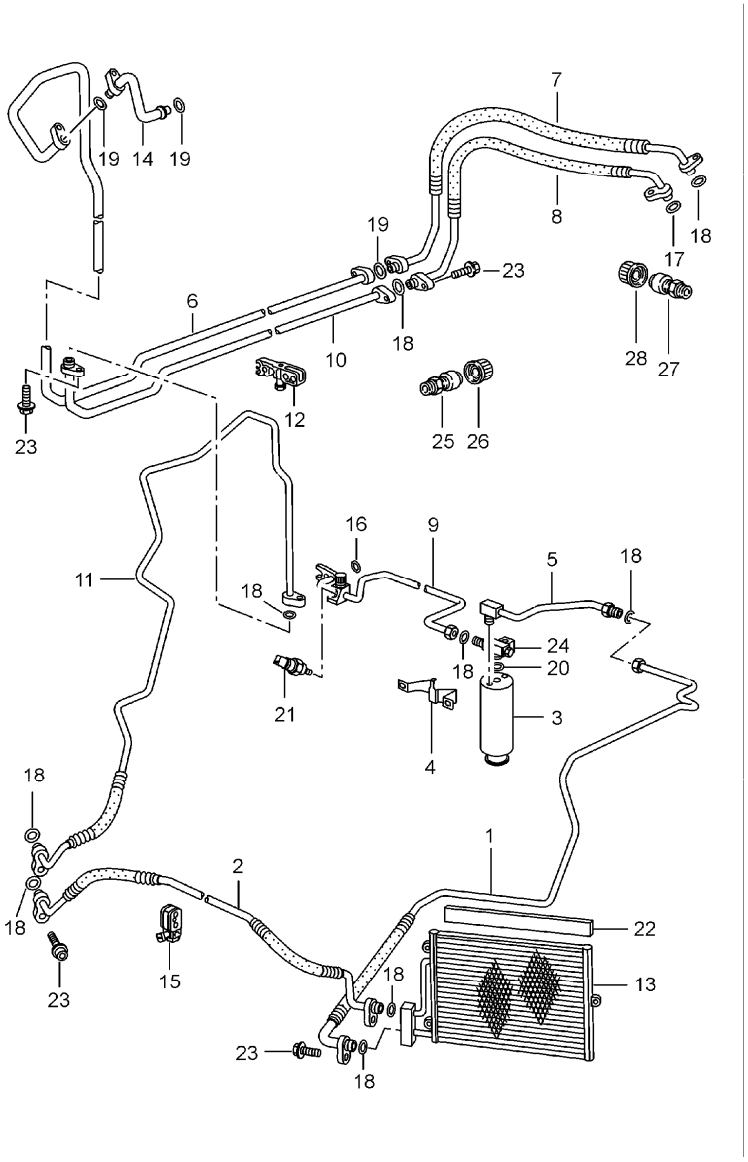


| Pos | Part Number | Description | Remark | Qty | Model |
|---|---|---|---|---|---|
| | | refrigerant circuit | | | |
| 1 | 996 573 105 03 | refrigerant line | -97 | 1 | |
| 1 | 996 573 105 03 | refrigerant line | 98- | 1 | |
| 2 | 996 573 104 02 | refrigerant line | -97 | 1 | |
| 2 | 996 573 104 02 | refrigerant line | 98- | 1 | |
| 3 | 944 573 143 01 | desiccator | | 1 | |
| 4 | 996 573 451 00 | support | | 1 | |
| 5 | 996 573 106 00 | pressure line | | 1 | |
| 6 | 996 573 091 01 | intake pipe | | 1 | |
| 7 | 986 573 099 04 | intake pipe | | 1 | M96 20 |
| 7 | 986 573 099 03 | intake pipe | 98- | 1 | |
| 8 | 986 573 097 01 | pressure line | -01 | 1 | |
| 8 | 986 573 097 02 | pressure line | 02- | 1 | |
| 9 | 996 573 108 02 | pressure line | /LL -01 | 1 | |
| 9 | 996 573 108 03 | pressure line | /LL 02 | 1 | |
| (9) | 996 573 108 01 | pressure line | /RL | 1 | |
| 10 | 996 573 092 01 | pressure line | | 1 | |
| 11 | 996 573 094 02 | pressure line | | 1 | |
| 12 | 996 347 543 00 | cable holder | | 2 | |
| 13 | 996 573 111 00 | condenser | | 2 | |
| 14 | 996 573 093 02 | intake pipe | /LL | 1 | |
| 14 | 996 573 093 03 | intake pipe | /RL | 1 | |
| 15 | 996 347 543 00 | cable holder | | X | |
| 16 | 999 707 247 40 | o-ring<br>7,5X2 | | 2 | |
| 17 | 999 707 382 40 | o-ring<br>23,8X2,4 | | 8 | |
| 18 | 999 707 250 40 | o-ring<br>10,6X2 | | 8 | |
| 19 | 999 707 252 40 | o-ring<br>17X2 | | X | |

| Pos | Part Number | Description | Remark | Qty | Model |
|---|---|---|---|---|---|
| 20 | 999 707 262 40 | o-ring<br>6,7X1,8 | | X | |
| 21 | 964 613 137 01 | pressure switch | | 1 | |
| 22 | 996 573 711 00 | cover strip | | 2 | |
| 23 | 900 067 247 02 | combination screw | | X | |
| 24 | 993 573 243 00 | distributing piece | | 1 | |
| 25 | 996 573 465 00 | valve<br>intake pipe | | 1 | |
| 26 | 944 573 663 02 | valve cap | | 1 | |
| 27 | 996 573 466 00 | valve<br>pressure line | | 1 | |
| 28 | 944 573 663 01 | valve cap | | 1 | |

| Model | Year | MG | SG | Illustration | Restrictions | UPD | 18:37 | 30.07.2008 | PET |
|---|---|---|---|---|---|---|---|---|---|
| 986 | 2004 | 8 | 13 | 813-45 | | 229 | | | |

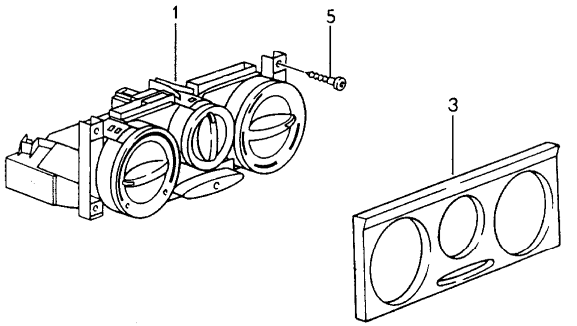


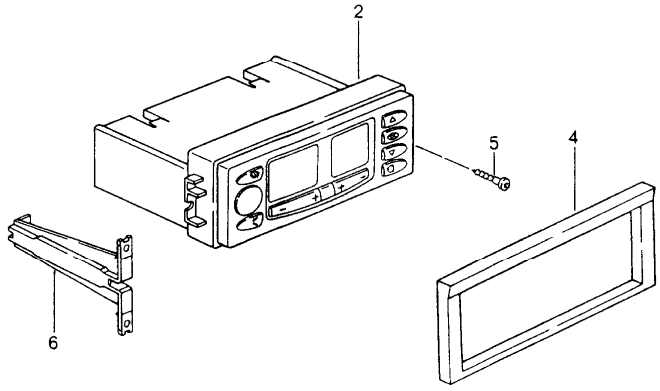


| Pos | Part Number | Description | Remark | Qty | Model |
|---|---|---|---|---|---|
| | | control switch | | | |
| 1 | 996 572 101 00 | control part | -01 | 1 | |
| | 01C | black | | | |
| 1 | 996 572 101 01 | control part | 02- | 1 | |
| | 01C | black | | | |
| - | 900 631 132 90 | bulb | | 1 | |
| 2 | 996 653 101 03 | control part | -00 | 1 | M 573 |
| | EFR | black | | | |
| 2 | 996 653 101 08 | control part | 01- | 1 | |
| | EFR | gloss black | | | |
| 2 A | 996 653 101 06 | control part | 02 | 1 | |
| | EFR | black mat | | | |
| 2 | 996 653 101 09 | control part | 02 | 1 | |
| | EFR | black mat | | | |
| 2 | 996 653 101 10 | control part | 03- | 1 | |
| | FFA | black mat | | | |
| 3 | 996 552 153 01 | cover | | 1 | |
| | 01C | black | | | |
| 4 | 996 552 677 00 | cover | | 1 | M 573 |
| | 01C | black | | | |
| (4) | 996 552 339 00 | cover | | 1 | M 573/581 |
| | 01C | black | | | |
| 5 | 900 143 076 09 | tapping screw | | X | |
| 6 | 996 573 501 00 | adapter | | 2 | M 573 |

| Model | Year | MG | SG | Illustration | Restrictions | UPD | 18:37 | 30.07.2008 | PET |
|---|---|---|---|---|---|---|---|---|---|
| 986 | 2004 | 8 | 17 | 817-00 | | 229 | | | |

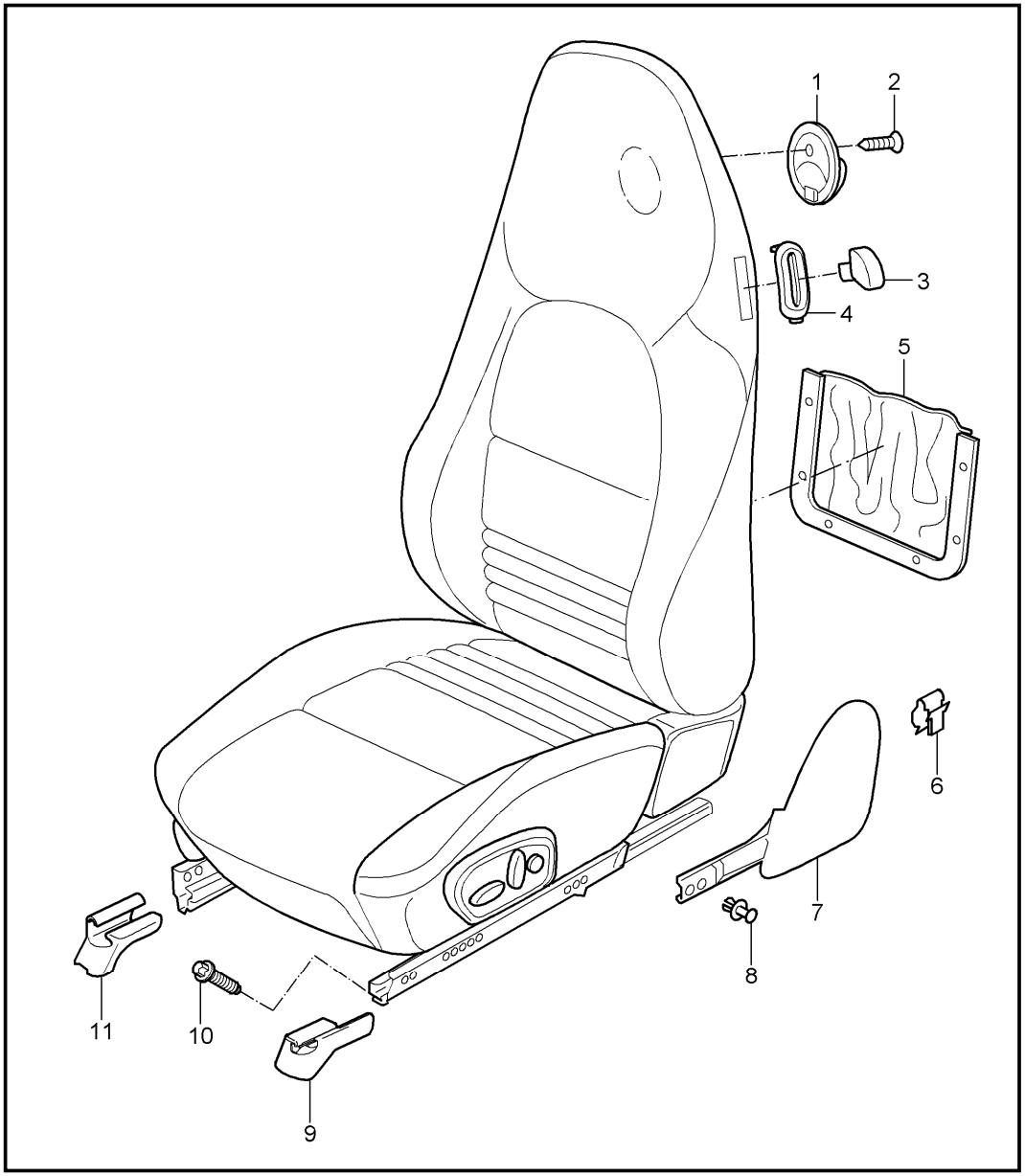


| Pos | Part Number | Description | Remark | Qty | Model |
|---|---|---|---|---|---|
| | | front seat<br>standard seat<br>comfort seat | | | BOXSTER |
| | | front seat<br>complete<br>not available | | | |
| 1 | 986 521 363 00 | coat hook | -99 | 2 | |
| (1) | 996 521 373 00 | coat hook | 00- | 2 | |
| | A03 | black | | | |
| 2 | 999 919 180 07 | countersunk-head screw<br>M 5 X 18 | -99 | 2 | |
| (2) | 999 919 199 09 | countersunk-head screw<br>M 5 X 25 | 00- | 2 | |
| 3 | 996 521 321 00 | actuating lever | /L/R -98 | 4 | |
| (3) | 996 521 421 00 | control button | /L 99- | 2 | |
| (3) | 996 521 422 00 | control button | /R 99- | 2 | |
| 4 | 996 521 323 00 | rosette<br>satin black | /L -98 | 2 | |
| (4) | 996 521 324 00 | rosette<br>satin black | /R -98 | 2 | |
| (4) | 996 521 323 02 | rosette<br>satin black | /L 99- | 2 | |
| (4) | 996 521 324 02 | rosette<br>satin black | /R 99- | 2 | |
| 5 | 996 521 313 00 | bag<br>leatherette | | 2 | |
| | A10 | black | -99 | | |
| | A12 | black | 00- | | |
| 5 | 996 521 313 01 | bag<br>leather | | 2 | M 982/983 |
| | 8YR | black | | | |
| 6 | 999 507 592 01 | cable clamp<br>cover<br>1,0 - 6,0 | | 2 | |
| 7 | 986 521 315 00 | cap | /L | 1 | M009/011/016 |
| | B12 | black-grey | -99 | | |

| Pos | Part Number | Description | Remark | Qty | Model |
|---|---|---|---|---|---|
| (7) | 986 521 316 00 | cap | /R | 1 | M009/011/016 |
| | B12 | black-grey | -99 | | |
| (7) | 996 521 315 01 | cap | /L 99- | 1 | M 010/016 |
| | D05 | granite grey | -99 | | |
| | A03 | black | 00- | | |
| (7) | 996 521 316 01 | cap | /R 99- | 1 | M 010/016 |
| | D05 | granite grey | -99 | | |
| | A03 | black | 00- | | |
| 8 | 999 507 599 40 | expansion rivet<br>10 | | 2 | |
| 9 | A 996 521 362 00 | cover | /L | 1 | IXSE |
| | 01C | satin black | | | |
| (9) | 996 521 362 01 | cover<br>right seat<br>inner | /L | 1 | IXSE |
| | 01C | satin black | | | |
| (9) | A 996 521 363 00 | cover<br>right seat<br>inner | /L | 1 | M 437/438 |
| | 01C | satin black | | | |
| (9) | 996 521 363 01 | cover<br>right seat<br>inner | /L | 1 | M 437/438 |
| | 01C | satin black | | | |
| (9) | A 996 521 361 00 | cover<br>left seat<br>inner | /R | 1 | IXSF |
| | 01C | satin black | | | |
| (9) | 996 521 361 01 | cover<br>left seat<br>inner | /R | 1 | IXSF |
| | 01C | satin black | | | |
| (9) | A 996 521 364 00 | cover<br>left seat<br>inner | /R | 1 | M 438 |
| | 01C | satin black | | | |
| (9) | 996 521 364 01 | cover<br>left seat<br>inner | /R | 1 | M 437/438 |
| | 01C | satin black | | | |
| 10 | A 999 141 038 07 | torx screw<br>M 10 X 26,5 | -02 | 8 | |
| (10) | 999 141 039 07 | screw<br>M 10 X 28 | 03- | 8 | M XSE/XSF |
| 11 | A 996 521 360 00 | cover<br>right seat<br>outer | /R -99 | 1 | IXSF |
| | 01C | satin black | | | |
| (11) | 996 521 360 01 | cover<br>right seat<br>outer | /R 00- | 1 | IXSF |
| | 01C | satin black | | | |
| (11) | A 996 521 364 00 | cover<br>right seat<br>outer | /R -99 | 1 | M 438 |
| | 01C | satin black | | | |
| (11) | 996 521 364 01 | cover<br>right seat<br>outer | /R 00- | 1 | M 437/438 |
| | 01C | satin black | | | |
| (11) | A 996 521 359 00 | cover<br>left seat<br>outer | /L -99 | 1 | IXSE |
| | 01C | satin black | | | |
| (11) | 996 521 359 01 | cover<br>left seat<br>outer | /L 00- | 1 | IXSE |
| | 01C | satin black | | | |
| (11) | A 996 521 363 00 | cover<br>left seat<br>outer | /L -99 | 1 | M 437 |
| | 01C | satin black | | | |

| Pos | Part Number | Description | Remark | Qty | Model |
|---|---|---|---|---|---|
| (11) | 996 521 363 01 | cover<br>left seat<br>outer | /L 00- | 1 | M 437/438 |
| | 01C | satin black | | | |

| Model | Year | MG | SG | Illustration | Restrictions | UPD | 18:37 | 30.07.2008 | PET |
|---|---|---|---|---|---|---|---|---|---|
| 986 | 2004 | 8 | 17 | 817-05 | | 229 | | | |

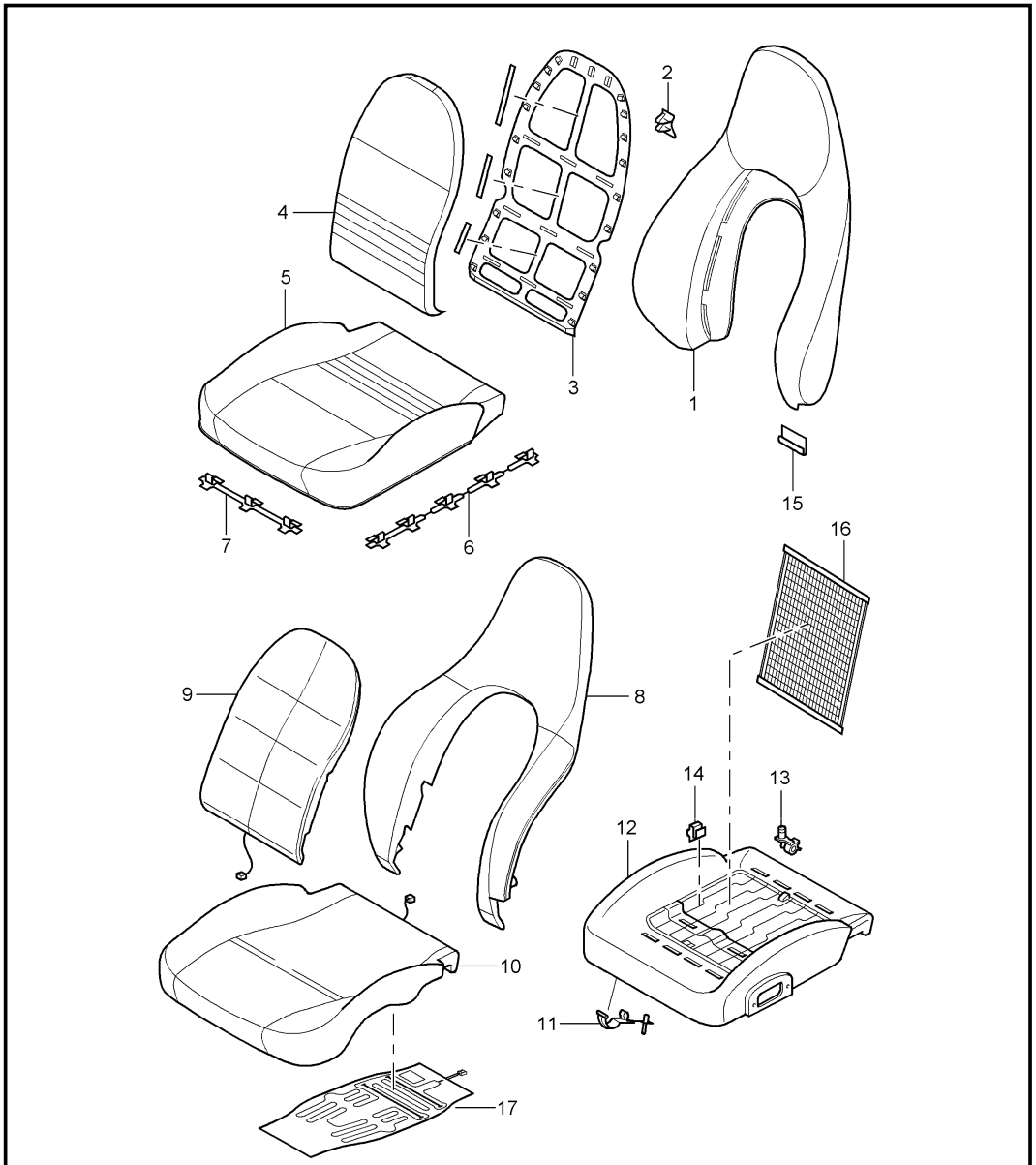


| Pos | Part Number | Description | Remark | Qty | Model |
|---|---|---|---|---|---|
| | | cover<br>foam part<br>standard seat<br>comfort seat | | | BOXSTER |
| 1 | 986 521 141 01 | backrest cover<br>outer part<br>leatherette | -99 | 2 | |
| | A10 | black | | | |
| | C50 | graphite grey | | | |
| | G10 | metropole blue | | | |
| | S30 | savanna | | | |
| (1) | 986 521 141 01 | backrest cover<br>alcantara | 00 | 2 | |
| | A12 | black | | | |
| | C52 | graphite grey | | | |
| | S32 | savanna | | | |
| | G12 | metropole blue | | | |
| (1) | 986 521 141 02 | backrest cover<br>outer part<br>leatherette/<br>ÔÇ£trendÔÇØ fabric | -99 | 2 | M 011 |
| | C30 | graphite grey/anthracite | | | |
| (1) | 986 521 141 03 | cover<br>backrest<br>outer part<br>alcantara | 01- | 2 | |
| | A12 | black | | | |
| | C52 | graphite grey | | | |
| | S32 | savanna | | | |
| | G12 | metropole blue | | | |
| | J32 | nephrite green | | | |
| (1) | 986 521 141 04 | cover<br>backrest<br>outer part | 03- | 2 | M 369/370<br>M 437/438<br>M 950/IXSU |
| | A12 | black | | | |
| | S32 | savanna | | | |

| Pos | Part Number | Description | Remark | Qty | Model |
|---|---|---|---|---|---|
| | G12 | metropole blue | | | |
| | J32 | nephrite green | | | |
| (1) | 996 521 141 04 | backrest cover<br>outer part<br>leather | 03- | 2 | M 369/370<br>M 437/438<br>M 982/983 |
| | ERZ | black | | | IXSU |
| | EEF | graphite grey | | | |
| | EGF | savanna | | | |
| | EFF | metropole blue | | | |
| | ELA | nephrite green | | | |
| | ENA | boxster red | | | |
| | FEH | cinnamon brown | | | |
| | VRA | dark grey/natural | | | |
| | VRB | brown/natural | | | |
| (1) | 996 521 141 01 | backrest cover<br>outer part<br>leatherette/leather | -01 | 2 | |
| | EAE | black/black | | | |
| | EEE | graphite grey/graphite gr. | | | |
| | EFE | metropole bl./metrop. blue | 98- | | |
| | ESH | metropole blue | 00- | | |
| | EGE | savanna/savanna | | | |
| (1) | 996 521 141 01 | backrest cover<br>outer part<br>leatherette/leather | -01 | 2 | |
| | ESF | graphite grey/graphite gr. | | | |
| | ESG | savanna/savanna | | | |
| | ESH | metropole bl./metrop. blue | | | |
| | ESE | black/black | | | |
| (1) | 996 521 141 05 | cover<br>backrest<br>outer part<br>leatherette | 01- | 2 | M 369/370<br>M 437/438<br>M 946 |

| Pos | Part Number | Description | Remark | Qty | Model |
|---|---|---|---|---|---|
| | ESE | black | | | |
| | ESF | graphite grey | | | |
| | ESG | savanna | | | |
| | ESH | metropole blue | | | |
| | FEP | nephrite green | | | |
| (1) | 996 521 993 00 | backrest cover<br>outer part<br>with<br>porsche<br>crest<br>leatherette/leather | 99 | 2 | IXSC |
| | 8YR | black/black | 99 | | |
| | C50 | graphite grey/graphite gr. | | | |
| | G10 | metropole bl./metrop. blue | | | |
| | S30 | savanna/savanna | | | |
| (1) | 996 521 141 02 | backrest cover<br>outer part<br>leather | -01 | 2 | M 982/983 |
| | EAF | black | | | |
| | EEF | graphite grey | | | |
| | EFF | metropole blue | | | |
| | EGF | savanna | | | |
| | ELA | nephrite green | | | |
| | ENA | boxster red | | | |
| | VRA | dark grey | | | |
| | VRB | brown/natural | | | |
| | ERZ | black | | | |
| (1) | 996 521 141 06 | cover<br>backrest<br>outer part<br>leather | 01- | 2 | M 982/983 |
| | ERZ | black | | | |
| | EEF | graphite grey | | | |
| | EGF | savanna | | | |

| Pos | Part Number | Description | Remark | Qty | Model |
|---|---|---|---|---|---|
| | EFF | metropole blue | | | |
| | ELA | nephrite green | | | |
| | ENA | boxster red | | | |
| | FEH | cinnamon brown | | | |
| | VRA | dark grey/natural | | | |
| | VRB | brown/natural | | | |
| (1) | 996 521 993 01 | backrest cover<br>outer part<br>with<br>porsche<br>crest<br>leather<br>draped leather | 99- | 2 | M 982/983<br>IXSC |
| | 8YR | black | 99 | | |
| | C50 | graphite grey | | | |
| | G10 | metropole blue | | | |
| | S30 | savanna | | | |
| | J30 | nephrite green | | | |
| | M30 | boxster red | | | |
| | T11 | brown/natural | | | |
| | D11 | dark grey/natural | | | |
| | P11 | cinnamon brown | | | |
| | ETO | black | 00- | | |
| 2 | 999 507 666 40 | fixing clip | | X | |
| 3 | A 996 521 551 00 | frame<br>backrest<br>centre | -00 | 2 | |
| (3) | 996 521 551 01 | frame<br>backrest<br>centre | 01- | 2 | |
| 4 | 986 521 151 01 | backrest cushion cover<br>cloth dunes | -99 | 2 | |
| | A10 | black | | | |
| | C50 | graphite grey | | | |

| Pos | Part Number | Description | Remark | Qty | Model |
|---|---|---|---|---|---|
| | G10 | metropole blue | 98- | | |
| | S30 | savanna | | | |
| 4 | 986 521 151 02 | backrest cushion cover<br>ÔÇ£trendÔÇØ fabric | 98-99 | 2 | M 011 |
| | C30 | graphite grey/anthracite | | | |
| (4) | 986 521 151 03 | backrest cushion cover<br>alcantara | -00 | 2 | |
| | EUZ | black | | | |
| | C55 | graphite grey | | | |
| | G15 | metropole blue | | | |
| | S35 | savanna | | | |
| (4) | 986 521 151 04 | backrest cover<br>centre part<br>alcantara | 01- | 2 | |
| | EUZ | black | | | |
| | C55 | graphite grey | | | |
| | S35 | savanna | | | |
| | G15 | metropole blue | | | |
| | J35 | nephrite green | | | |
| (4) | 986 521 151 06 | backrest cushion cover<br>centre part | 03- | 2 | M 369/370<br>M 437/438 |
| | EUZ | black | | | M 950/IXSU |
| | C55 | graphite grey | | | |
| | S35 | savanna | | | |
| | G15 | metropole blue | | | |
| | J35 | nephrite green | | | |
| (4) | 996 521 151 01 | backrest cushion cover<br>leatherette/leather | -00 | 2 | |
| | B50 | space grey | | | |
| (4) | 996 521 151 05 | backrest cushion cover<br>leather | 01- | 2 | M 946/983 |
| | ETO | black | 00- | | |

| Pos | Part Number | Description | Remark | Qty | Model |
|---|---|---|---|---|---|
| | C50 | graphite grey | | | |
| | G10 | metropole blue | 98- | | |
| | S30 | savanna | | | |
| | J30 | nephrite green | | | |
| | M30 | boxster red | | | |
| | D11 | dark grey | 00- | | |
| | T11 | brown/natural | 00- | | |
| | P11 | cinnamon brown | 01- | | |
| (4) | 996 521 151 03 | backrest cushion cover<br>draped leather | -00 | 2 | |
| | 8YR | black | -99 | | |
| | C50 | graphite grey | 98- | | |
| | G10 | metropole blue | 98- | | |
| | S30 | savanna | 98- | | |
| | J30 | nephrite green | 98- | | |
| | M30 | boxster red | 98- | | |
| | D11 | dark grey | 00- | | |
| | T11 | brown | 00- | | |
| | ETO | black | 00- | | |
| (4) | 996 521 151 06 | backrest cushion cover<br>centre part<br>draped leather | 01- | 2 | M 982 |
| | ETO | black | | | |
| | C50 | graphite grey | | | |
| | S30 | savanna | | | |
| | G10 | metropole blue | | | |
| | J30 | nephrite green | | | |
| | M30 | boxster red | | | |
| | P11 | cinnamon brown | | | |
| | D11 | dark grey/natural | | | |

| Pos | Part Number | Description | Remark | Qty | Model |
|---|---|---|---|---|---|
| | T11 | brown/natural | | | |
| (4) | 996 521 151 08 | backrest cushion cover<br>centre part<br>draped leather | 02-<br><br>03- | 2 | M 369/370<br>M 437/438<br>IXSU |
| | ETO | black | | | |
| | C50 | graphite grey | | | |
| | S30 | savanna | | | |
| | G10 | metropole blue | | | |
| | J30 | nephrite green | | | |
| | M30 | boxster red | | | |
| | P11 | cinnamon brown | | | |
| | D11 | dark grey/natural | | | |
| | T11 | brown/natural | | | |
| - | 964 555 565 00 | felt strip<br>centre part<br>backrest | 01- | 2 | |
| 5 | 986 521 161 06 | seat cover<br>leatherette/<br>centre part<br>alcantara | 00 | 2 | |
| | ESA | black/black | | | |
| | ESB | graphite grey/graphite gr. | | | |
| | ESC | savanna/savanna | | | |
| | ESD | metropole bl./metrop. blue | | | |
| (5) | 986 521 161 07 | cover<br>alcantara | 01- | 2 | M 369/370 |
| | ESA | black | | | |
| | ESB | graphite grey | | | |
| | ESC | savanna | | | |
| | ESD | metropole blue | | | |
| | FAH | nephrite green | | | |
| (5) | 986 521 161 08 | cover for cushion | 03- | 2 | M 369/370 |
| | ESA | black | | | M 437/438 |

| Pos | Part Number | Description | Remark | Qty | Model |
|---|---|---|---|---|---|
| | ESB | graphite grey | | | M 950/IXSU |
| | ESC | savanna | | | |
| | ESD | metropole blue | | | |
| | FAH | nephrite green | | | |
| (5) | 986 521 161 05 | seat cover<br>leatherette/<br>centre part<br>cloth dunes | 97-99 | 2 | |
| | EAJ | black/black | | | |
| | EEJ | graphite grey/graphite gr. | | | |
| | EFD | metropole bl./metrop. blue | 98- | | |
| | EGG | savanna/savanna | | | |
| (5) | 986 521 161 02 | seat cover<br>leatherette/<br>seat surface<br>ÔÇ£trendÔÇØ fabric | 98-99 | 2 | M 011 |
| | EEG | graphite grey/anthracite | 98- | | |
| (5) | 996 521 161 01 | seat cover<br>leatherette/<br>seat surface<br>leather | -00 | 2 | M 946 |
| | EAE | black/black | 99 | | |
| | EEE | graphite grey/graphite gr. | | | |
| | EFE | metropole bl./metrop. blue | 98- | | |
| | EGE | savanna/savanna | | | |
| | ESH | metropole blue | 00- | | |
| | ESE | black | 00 | | |
| (5) | 996 521 161 05 | cover for cushion<br>leatherette/leather<br>seat surface | 01- | 2 | |
| | ESF | graphite grey/graphite gr. | | | |
| | ESG | savanna/savanna | | | |
| | ESH | metropole bl./metrop. blue | | | |
| | ESE | black | | | |
| (5) | 996 521 161 02 | cover for cushion<br>leather | -00 | 2 | |
| | EAF | black | -99 | | |
| | ERZ | black | 00- | | |
| | EEF | graphite grey | | | |
| | EGJ | space grey/space grey | -00 | | |
| | EFF | metropole bl./metrop. blue | | | |
| | EGF | savanna | | | |
| | ELA | nephrite green | 97- | | |
| | ENA | boxster red | | | |
| | VRA | dark grey | 00- | | |
| | VRB | brown/natural | 00- | | |
| (5) | 996 521 161 06 | cover for cushion<br>leather | 01- | 2 | |
| | ERZ | black | 00- | | |
| | EEF | graphite grey | | | |
| | EFF | metropole bl./metrop. blue | | | |
| | EGF | savanna | | | |
| | ELA | nephrite green | 97- | | |
| | ENA | boxster red | | | |
| | VRA | dark grey | 00- | | |
| | VRB | brown/natural | 00- | | |
| | FEH | cinnamon brown | 01- | | |
| (5) | 996 521 161 03 | seat cover<br>draped leather | 98-00 | 2 | |
| | EAF | black | -99 | | |
| | EEF | graphite grey | 98- | | |
| | EFF | metropole blue | 98- | | |
| | EGF | savanna | 98- | | |
| | ELA | nephrite green | 98- | | |

| Pos | Part Number | Description | Remark | Qty | Model |
|---|---|---|---|---|---|
| | ENA | boxster red | 98- | | |
| | VRA | dark grey | 00- | | |
| | VRB | brown/natural | 00- | | |
| | ERZ | black | 00- | | |
| (5) | 996 521 161 07 | seat cover<br>draped leather | 01- | 2 | |
| | EEF | graphite grey | 98- | | |
| | EFF | metropole blue | 98- | | |
| | EGF | savanna | 98- | | |
| | ELA | nephrite green | 98- | | |
| | ENA | boxster red | 98- | | |
| | VRA | dark grey | 00- | | |
| | VRB | brown/natural | 00- | | |
| | ERZ | black | 00- | | |
| | FAG | cinnamon brown | 01- | | |
| 6 | 996 521 543 00 | clamp<br>long | -00 | 4 | |
| 7 | 996 521 541 00 | clamp<br>short | -00 | 6 | |
| 8 | 996 521 535 04 | foam part<br>backrest frame | | 2 | |
| 9 | 996 521 531 00 | foam part<br>backrest cushion<br>without heating | | 2 | |
| (9) | 996 521 531 01 | foam part<br>backrest cushion<br>with heating | | 2 | M 139/340 |
| (9) | 996 521 537 00 | foam part<br>backrest cushion<br>without heating | | 2 | IXSU |
| (9) | 996 521 539 00 | foam part<br>backrest cushion<br>with heating | 03- | 2 | IXSU |
| (9) | A 996 521 539 00 | foam part<br>backrest | 97- | 2 | M 139/140 |
| 10 | 996 521 521 00 | foam part<br>seat cushion<br>without heating | -00 | 2 | |
| (10) | 996 521 521 01 | foam part<br>seat cushion<br>with heating | -00 | 2 | |
| (10) | 996 521 523 00 | foam part<br>seat cushion<br>without heating | 03- | 2 | IXSU |
| (10) | 996 521 525 00 | foam part<br>seat cushion<br>with heating | 03- | 2 | M 342/IXSU |
| (10) | 996 521 571 00 | foam part<br>seat cushion | 01- | 2 | |
| 11 | 996 521 597 00 | clip | | 4 | |
| (11) | 996 521 937 00 | clip<br>cushion carrier | 01- | 10 | |
| 12 | 996 521 509 00 | cushion carrier<br>seat cushion<br>front seat | -00 | 2 | |
| (12) | 996 521 505 00 | cushion carrier<br>seat cushion<br>front seat | 01- | 2 | |
| 13 | 999 507 506 40 | cable holder<br>5,0<br>seat adjuster<br>mechanical | | 1 | M 539/540 |
| 14 | 999 651 314 01 | cable clamp<br>3,0 - 4,0 | | 8 | |
| 15 | 996 521 515 00 | catch<br>backrest cover | | 4 | |
| 16 | 996 521 507 01 | mat<br>seat cushion<br>padding | | 1 | |
| 17 | 996 653 105 01 | heating element<br>seat surface | 01- | 1 | |

| Model | Year | MG | SG | Illustration | Restrictions | UPD | 18:38 | 30.07.2008 | PORSCHE PET PORSCHE |
|---|---|---|---|---|---|---|---|---|---|
| 986 | 2004 | 8 | 17 | 817-07 | | 229 | | | |

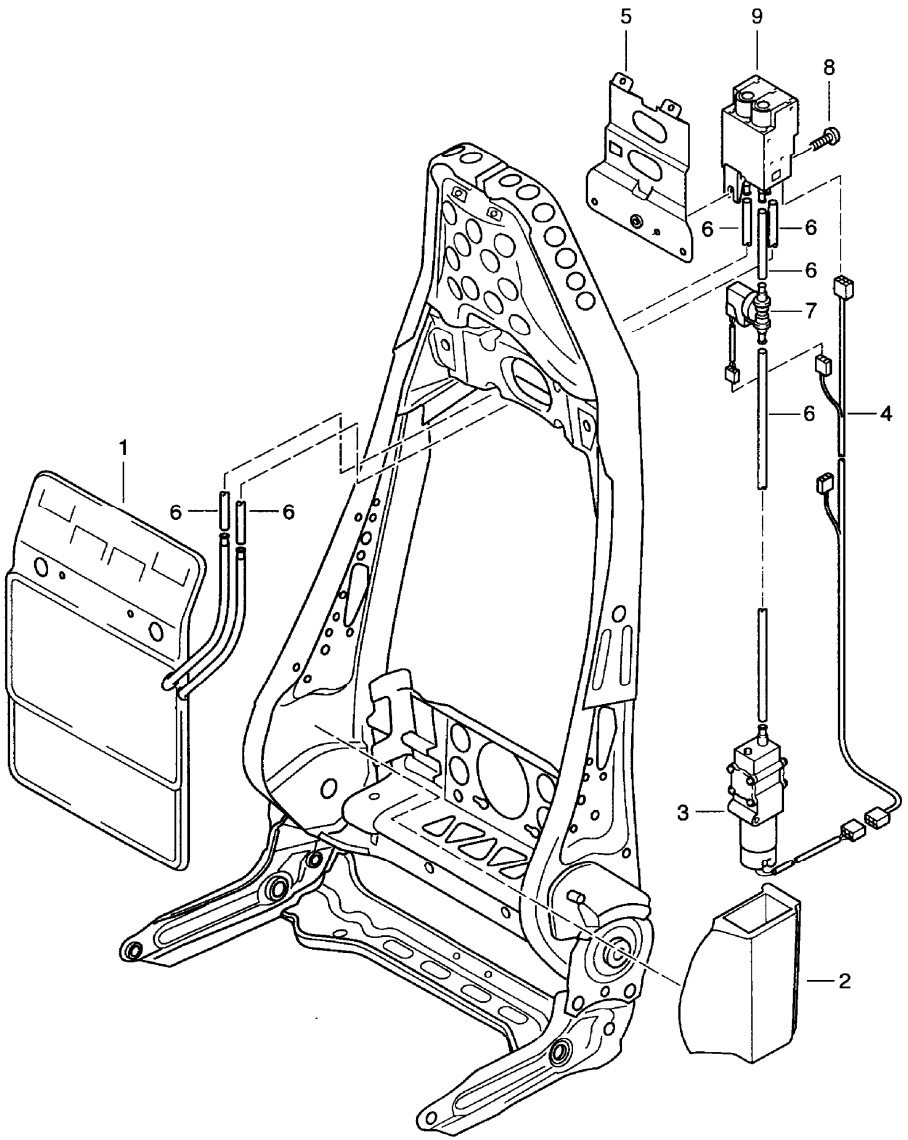


| Pos | Part Number | Description | Remark | Qty | Model |
|---|---|---|---|---|---|
| | | lumbar support | | | BOXSTER |
| 1 | 996 521 709 00 | lumbar support<br>complete | | 2 | |
| 2 | 996 521 719 00 | sound absorber<br>compressor | | 2 | |
| 3 | 996 620 725 00 | compressor | | 2 | |
| 4 | 996 612 541 00 | wiring harness<br>seating position control<br>lumbar support adjustment | | 2 | |
| (4) | 996 612 542 00 | wiring harness<br>seating position control<br>lumbar support adjustment | | 2 | M 537/538 |
| 5 | 996 521 721 00 | support<br>valve housing | | 2 | |
| 6 | 999 181 749 40 | air hose<br>seating position control | | 2 | |
| 7 | 996 613 725 00 | pressure switch | | 2 | |
| 8 | 900 067 051 02 | pan-head screw<br>M 5 X 10 | | 2 | |
| 9 | 996 617 725 00 | valve housing<br>seating position control | | 2 | |
| (9) | 996 617 726 00 | valve housing<br>seating position control | | 2 | M 537/538 |

| Model | Year | MG | SG | Illustration | Restrictions | UPD | 18:38 | 30.07.2008 | PET |
|---|---|---|---|---|---|---|---|---|---|
| 986 | 2004 | 8 | 17 | 817-10 | | 229 | | | |

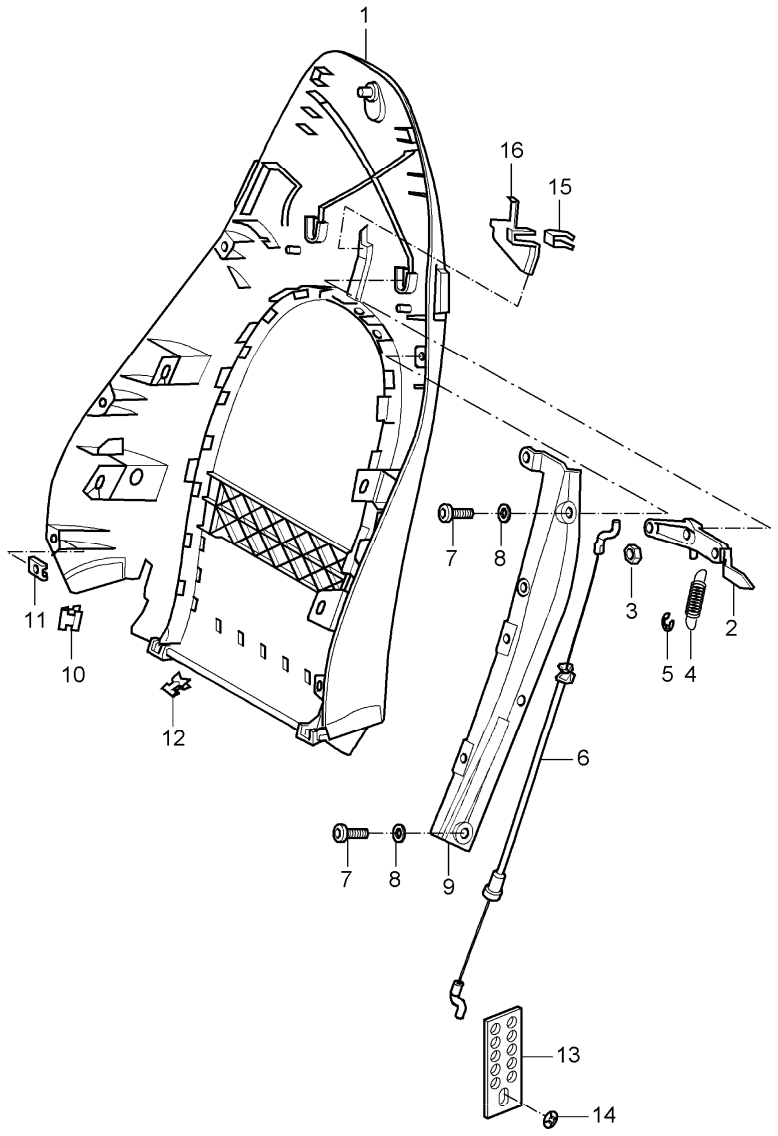


| Pos | Part Number | Description | Remark | Qty | Model |
|---|---|---|---|---|---|
| | | backrest shell<br>standard seat<br>comfort seat | | | BOXSTER |
| 1 | 986 521 303 00 | backrest shell | -98 | 2 | |
| | B12 | black-grey | | | |
| (1) | 986 521 303 01 | backrest shell<br>leather | -98 | 2 | M 010 |
| | 8YR | black | | | |
| | C50 | graphite grey | | | |
| | G10 | metropole blue | | | |
| | S30 | savanna | | | |
| | J30 | nephrite green | | | |
| | M30 | boxster red | -98 | | |
| (1) | 986 521 303 06 | backrest shell | 99 | 2 | M 016 |
| | B12 | black-grey | | | |
| (1) | 986 521 303 07 | backrest shell<br>leather | 99 | 2 | M 010 |
| | 8YR | black | | | |
| | C50 | graphite grey | | | |
| | G10 | metropole blue | | | |
| | S30 | savanna | | | |
| | J30 | nephrite green | | | |
| | M30 | boxster red | | | |
| 2 | 996 521 311 00 | linkage lever | /L | 2 | |
| (2) | 996 521 312 00 | linkage lever | /R | 2 | |
| 3 | 996 521 339 00 | deflection roller | | 4 | |
| 4 | 999 522 032 00 | tension spring<br>0,7 X 7,5 X 15 | | 4 | |
| 5 | N 900 114 02 | clamping washer<br>4 | | 4 | |
| 6 | A 996 521 385 00 | cable | 97 | 4 | |
| (6) | 986 521 385 00 | cable | 98- | 4 | |

| Pos | Part Number | Description | Remark | Qty | Model |
|---|---|---|---|---|---|
| 7 | 999 143 009 01 | screw<br>M 5 X 16 | | 4 | |
| 8 | 900 151 027 02 | washer<br>backrest shell<br>5,3 | | 4 | |
| 9 | 996 521 319 00 | bracket | /L -00 | 2 | |
| (9) | 996 521 319 01 | cup | /L 01- | 2 | |
| (9) | 996 521 320 00 | bracket | /R -00 | 2 | |
| (9) | 996 521 320 01 | cup<br>padding<br>backrest | /R 01- | 2 | |
| 10 | 999 507 594 01 | u-clamp<br>backrest cover<br>1,0 - 2,0 | | 28 | |
| 11 | 999 507 677 01 | speed nut<br>M 5 | | 8 | |
| 12 | 311 881 247 | clamp<br>cover<br>centre part | | 4 | |
| 13 | 996 521 377 00 | perforated plate | | 4 | |
| 14 | N 900 151 01 | clamping washer<br>5 | | 4 | |
| 15 | 999 507 596 01 | u-clamp<br>1,00 - 1,50 | | 2 | |
| 16 | 996 521 341 00 | relay lever | | 2 | |
| - | 996 521 903 00 | repair kit<br>backrest locking lever<br>see technical information<br>GR. 7 BOXSTER NR. 1A/98 | | 2 | |

| Pos | Part Number | Description | Remark | Qty | Model |
|---|---|---|---|---|---|

| Model | Year | MG | SG | Illustration | Restrictions | UPD | 18:38 | 30.07.2008 | PET |
|---|---|---|---|---|---|---|---|---|---|
| 986 | 2004 | 8 | 17 | 817-12 | | 229 | | | |

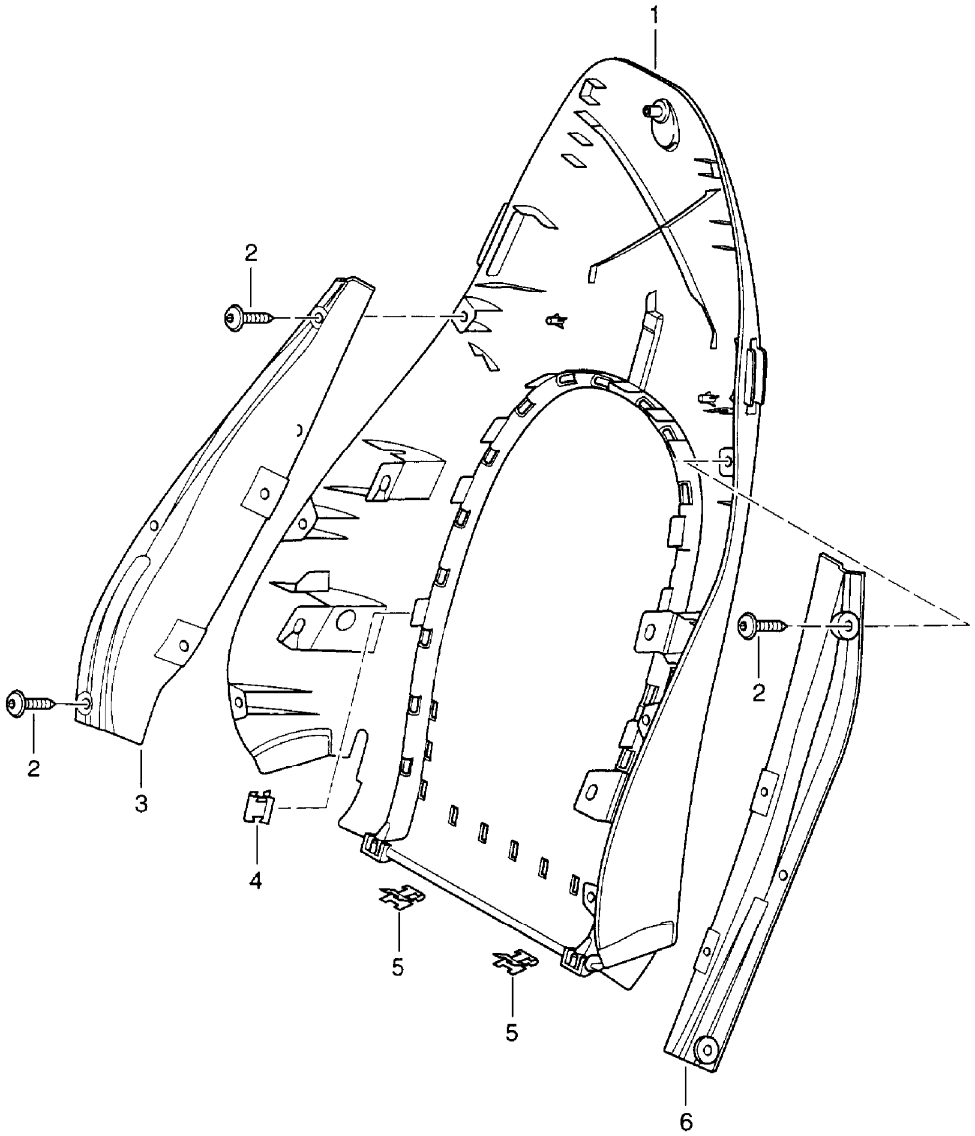


| Pos | Part Number | Description | Remark | Qty | Model |
|---|---|---|---|---|---|
| | | backrest shell<br>standard seat<br>comfort seat | <br>99-<br>99- | | BOXSTER |
| 1 | 986 521 303 06 | backrest shell | 99 | 2 | M 016 |
| | B12 | black-grey | | | |
| | 00-<br>01C | satin black | | | |
| 1 | 986 521 303 07 | backrest shell<br>leather | 99 | 2 | M 010 |
| | 8YR | black | | | |
| | C50 | graphite grey | | | |
| | G10 | metropole blue | | | |
| | S30 | savanna | | | |
| | J30 | nephrite green | | | |
| | M30 | boxster red | | | |
| 1 | 986 521 303 06 | backrest shell<br>lacquered | 00- | 2 | M 016 |
| | 01C | satin black | | | |
| 2 | 999 143 009 01 | screw<br>backrest shell<br>M 5 X 16 | | X | |
| - | 900 151 027 02 | washer<br>5,3 | | 4 | |
| 3 | 996 521 320 00 | cup | /R -00 | 2 | |
| 3 | 996 521 320 01 | bracket | /R 01- | 2 | |
| | | backrest side bolster | | | |
| 4 | 999 507 594 01 | u-clamp<br>backrest cover<br>1,0 - 2,0 | | 28 | |
| 5 | 311 881 247 | clamp<br>mount<br>cover<br>centre part | | 4 | |
| 6 | 996 521 319 00 | cup | /L -00 | 2 | |
| 6 | 996 521 319 01 | bracket | /L 01- | 2 | |

| Pos | Part Number | Description | Remark | Qty | Model | Pos | Part Number | Description | Remark | Qty | Model |
|---|---|---|---|---|---|---|---|---|---|---|---|
| | | backrest side bolster | | | | | | | | | |

| Model | Year | MG | SG | Illustration | Restrictions | UPD | 18:38 | 30.07.2008 | PET |
|---|---|---|---|---|---|---|---|---|---|
| 986 | 2004 | 8 | 17 | 817-15 | | 229 | | | |

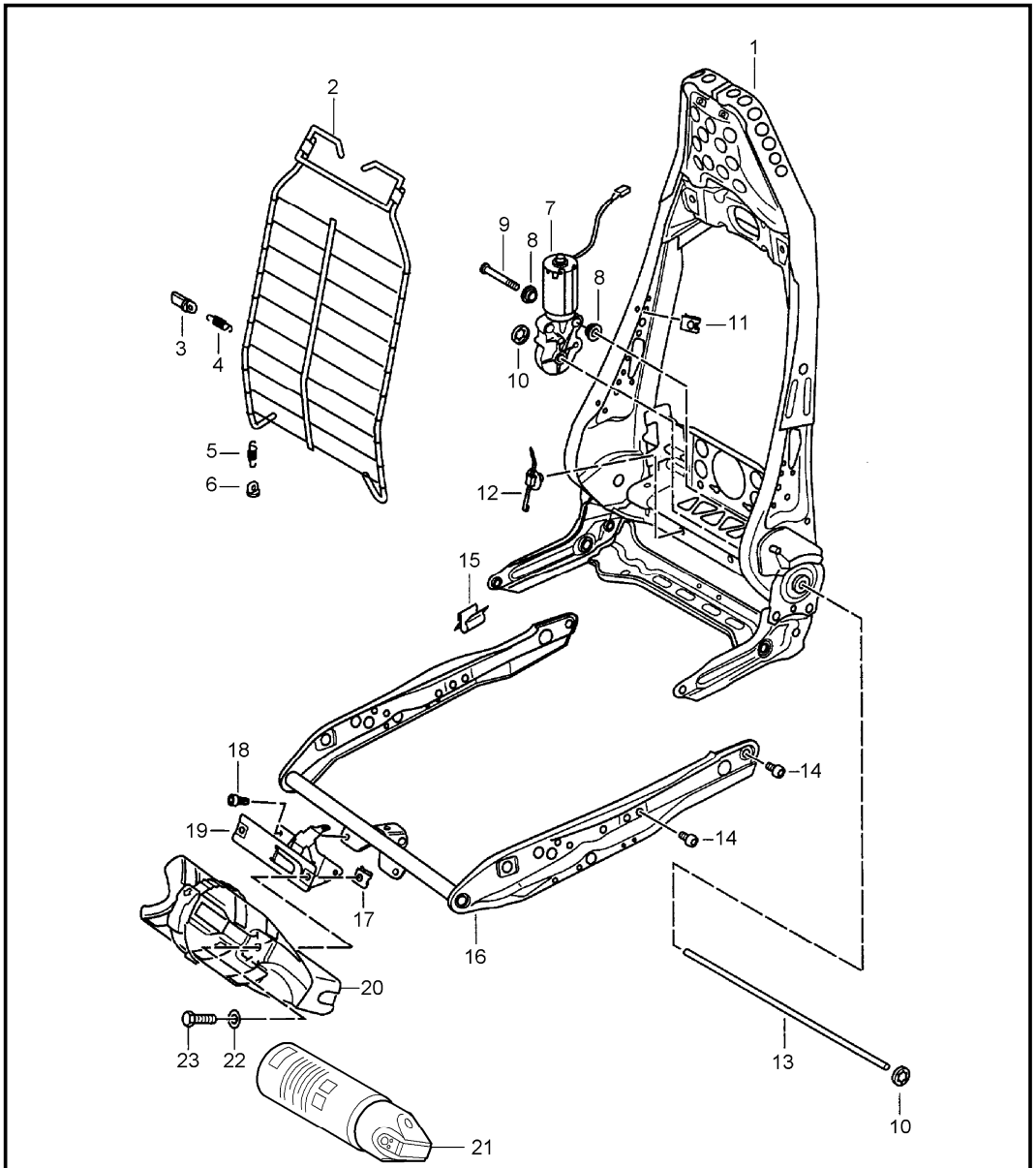


| Pos | Part Number | Description | Remark | Qty | Model |
|---|---|---|---|---|---|
| | | backrest frame<br>seat frame<br>standard seat<br>comfort seat | | | BOXSTER |
| 1 | A 986 521 327 00 | backrest frame | 97 | 2 | |
| (1) | 986 521 327 02 | backrest frame | -98 | 2 | |
| 2 | 996 521 355 00 | mat | 97 | 2 | |
| (2) | 996 521 355 01 | mat | 98 | 2 | |
| 3 | 996 521 367 00 | support | | 8 | |
| 4 | 996 521 333 00 | spring<br>centre | | 4 | |
| 5 | 996 521 331 01 | spring | 98- | 4 | |
| 6 | 996 521 365 00 | support<br>lower | | 4 | |
| 7 | 996 624 321 00 | engine<br>seating position control<br>for backrest adjustment | | 2 | |
| (7) | 996 624 331 00 | engine<br>seating position control<br>for backrest adjustment | | 2 | M 537/538 |
| 8 | 999 924 129 40 | bush<br>6 X 12 X 4,5 | | 4 | |
| 9 | 999 073 141 02 | oval-head screw<br>M 6 X 42,5 | | 2 | |
| 10 | 999 507 597 01 | clamping washer<br>10,0 | | 4 | |
| 11 | 999 507 598 02 | speed nut<br>M 5 | | 8 | |
| 12 | 999 513 063 40 | cable holder<br>12,0 - 35 | | 4 | |
| 13 | 996 521 343 01 | drive shaft | | 2 | |
| 14 | 999 141 027 02 | oval-head screw<br>M 8 X 10 | | 8 | |
| 16 | 986 521 227 00 | seat frame | | 2 | |
| 17 | 999 507 067 02 | speed nut<br>M 5 | | 2 | |

| Pos | Part Number | Description | Remark | Qty | Model |
|---|---|---|---|---|---|
| 18 | 999 141 028 02 | pan-head screw<br>M 5 X 10 | | 3 | |
| 19 | 996 521 674 00 | support<br>fire extinguisher | /LL/R | 1 | M509 |
| (19) | 996 521 673 00 | support<br>fire extinguisher | /RL/L | 1 | M509 |
| 20 | 996 521 607 00 | cup<br>fire extinguisher | | 1 | M509 |
| 21 | 996 722 115 00 | fire extinguisher<br>Information available<br>Information available | | 1 | M509 |
| 22 | 900 151 027 02 | washer<br>5,3 | | 2 | |
| 23 | N 044 734 1 | pan-head screw<br>M 5 X 16 | | 2 | |

| Pos | Part Number | Description | Remark | Qty | Model |
|---|---|---|---|---|---|

| Model | Year | MG | SG | Illustration | Restrictions | UPD | 18:38 | 30.07.2008 | PORSCHE PET PORSCHE |
|---|---|---|---|---|---|---|---|---|---|
| 986 | 2004 | 8 | 17 | 817-16 | | 229 | | | |

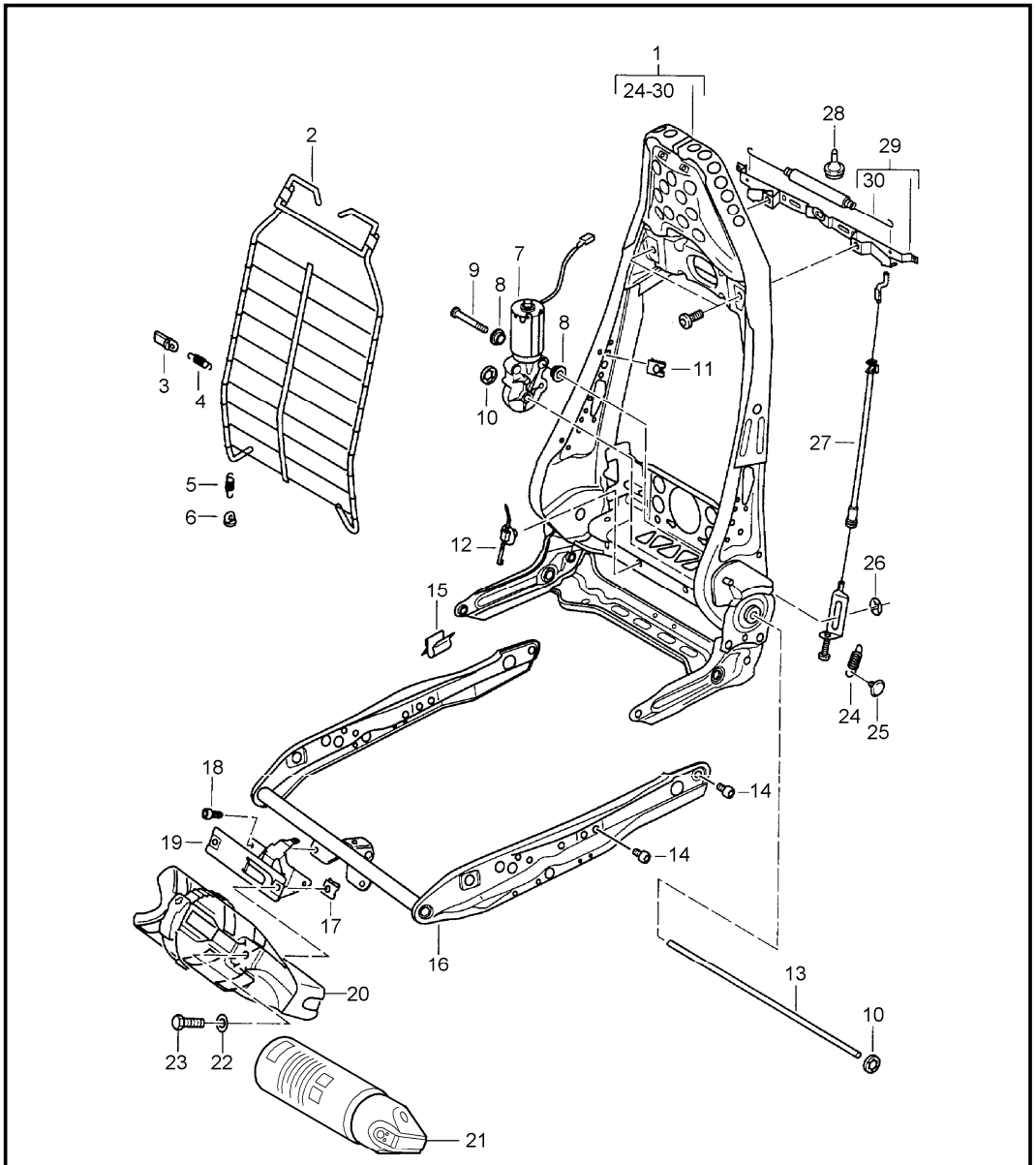


| Pos | Part Number | Description | Remark | Qty | Model |
|---|---|---|---|---|---|
| | | backrest frame<br>seat frame<br>standard seat<br>comfort seat | | | BOXSTER |
| 1 | 986 521 327 03 | backrest frame | | 2 | |
| 2 | 996 521 355 01 | mat | | 2 | |
| 3 | 996 521 367 00 | support | | 8 | |
| 4 | 996 521 333 00 | spring<br>centre | | 4 | |
| 5 | 996 521 331 01 | spring | | 4 | |
| 6 | 996 521 365 00 | support<br>lower | | 4 | |
| 7 | 996 624 321 00 | engine<br>seating position control<br>for backrest adjustment | | 2 | |
| (7) | 996 624 331 00 | engine<br>seating position control<br>for backrest adjustment | | 2 | M 537/538 |
| 8 | 999 924 129 40 | bush<br>6 X 12 X 4,5 | | 4 | |
| 9 | 999 073 141 02 | oval-head screw<br>M 6 X 42,5 | | 2 | |
| 10 | 999 507 597 01 | clamping washer<br>10,0 | | 4 | |
| 11 | 999 507 598 02 | speed nut<br>M 5 | | 8 | |
| 12 | 999 513 063 40 | cable holder<br>12,0 - 35 | | 4 | |
| 13 | 996 521 343 01 | drive shaft | | 2 | |
| 14 | 999 141 027 02 | oval-head screw<br>M 8 X 10 | | 8 | |
| 16 | 986 521 227 00 | seat frame | | 2 | |
| 17 | 999 507 067 02 | speed nut<br>M 5 | | 2 | |
| 18 | 999 141 028 02 | pan-head screw<br>M 5 X 10 | | 3 | |
| (19) | 996 521 674 00 | support<br>fire extinguisher | /LL/R | 1 | M509 |

| Pos | Part Number | Description | Remark | Qty | Model |
|---|---|---|---|---|---|
| 19 | 996 521 673 00 | support<br>fire extinguisher | /RL/L | 1 | M509 |
| 20 | 996 521 607 00 | cup | | 1 | M509 |
| 21 | 996 722 115 00 | fire extinguisher<br>Information available<br>Information available | | 1 | M509 |
| 22 | 900 151 027 02 | washer<br>5,3 | | 2 | |
| 23 | N 044 734 1 | pan-head screw<br>M 5 X 16 | | 2 | |
| 24 | 999 522 032 00 | tension spring<br>0,7 X 7,5 X 15 | | 4 | |
| 25 | 999 703 474 40 | stopper | | 4 | |
| 26 | N 900 114 02 | clamping washer<br>4 | | 4 | |
| 27 | 996 521 185 00 | cable | | 4 | |
| | | mount<br>backrest locking lever | | | |
| 28 | 996 521 403 00 | rubber buffer | | 2 | |
| 29 | 996 521 175 00 | backrest locking lever | | 2 | |
| 30 | 996 521 195 00 | clutch power spring | | 2 | |

| Pos | Part Number | Description | Remark | Qty | Model |
|---|---|---|---|---|---|

| Model | Year | MG | SG | Illustration | Restrictions | UPD | 18:39 | 30.07.2008 | PET |
|---|---|---|---|---|---|---|---|---|---|
| 986 | 2004 | 8 | 17 | 817-17 | | 229 | | | |

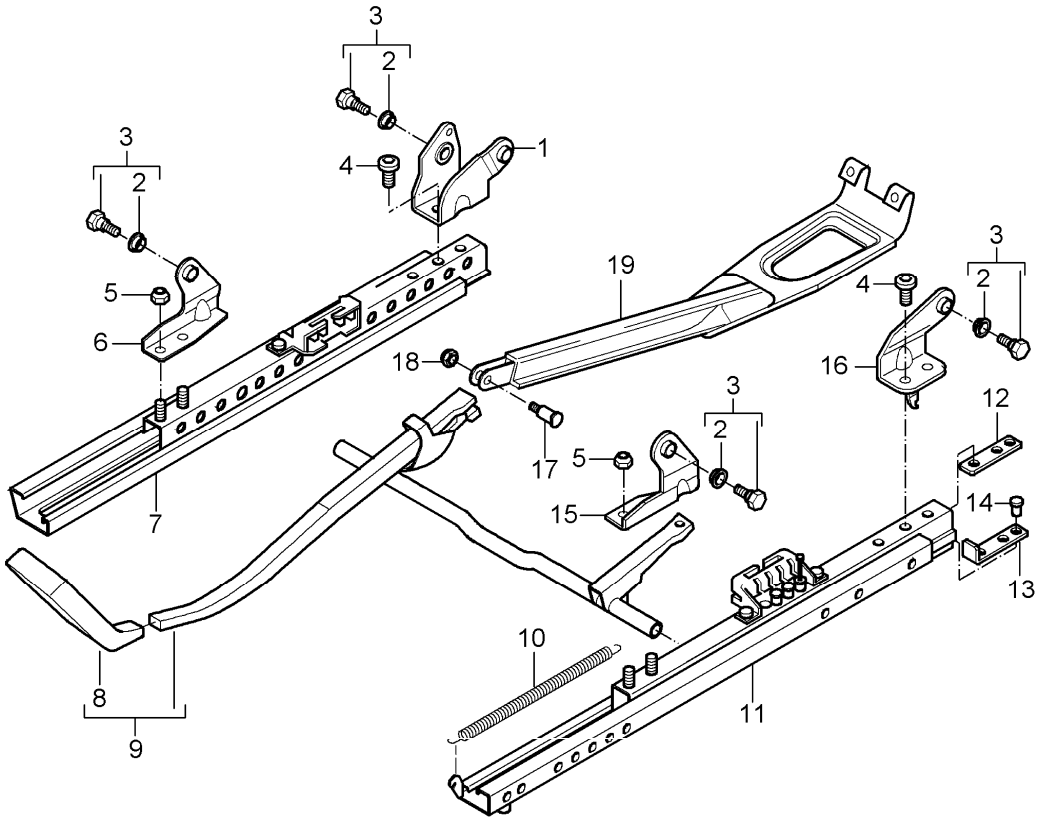


| Pos | Part Number | Description | Remark | Qty | Model |
|---|---|---|---|---|---|
| | | seat adjuster<br>standard seat | | | BOXSTER |
| 1 | 986 521 639 00 | adapter<br>seat-belt buckle<br>seat frame<br>inner rear | /L | 1 | |
| (1) | 986 521 640 00 | adapter<br>seat-belt buckle<br>seat frame<br>inner rear | /R | 1 | |
| 3 | A 996 521 259 00 | screw | 97 | 6 | |
| (3) | 996 521 259 02 | screw<br>complete | | 8 | |
| 4 | 986 521 659 00 | screw | | 8 | |
| 5 | 900 910 003 07 | hexagon nut<br>adapter<br>M 8 | | 8 | |
| 6 | 986 521 692 00 | adapter<br>seat frame<br>front<br>right | | 2 | |
| 7 | A 996 521 692 00 | seat rail | /R -98 | 1 | |
| (7) | 996 521 692 01 | seat rail<br>left seat<br>inner | /R 98- | 1 | |
| (7) | A 996 521 691 00 | seat rail<br>inner | /L -98 | 1 | |
| (7) | 996 521 691 01 | seat rail<br>right seat<br>inner | /L 98- | 1 | |
| 8 | 996 521 617 00 | handle | /L 97 | 1 | |
| (8) | 996 521 617 01 | handle | /L 98- | 1 | |
| (8) | 996 521 618 00 | handle | /R 97 | 1 | |
| (8) | 996 521 618 01 | handle | /R 98- | 1 | |
| 9 | 996 521 621 00 | lever<br>complete | /L 97 | 1 | |
| (9) | 996 521 621 01 | lever<br>complete | /L 98- | 1 | |

| Pos | Part Number | Description | Remark | Qty | Model |
|---|---|---|---|---|---|
| (9) | 996 521 622 00 | lever<br>complete | /R 97 | 1 | |
| (9) | 996 521 622 01 | lever<br>complete | /R 98- | 1 | |
| 10 | 996 521 645 00 | clutch power spring | | 2 | |
| 11 A | 996 521 689 00 | seat rail | /L -97 | 1 | |
| (11) | 996 521 689 01 | seat rail<br>left seat<br>outer | /L 98- | 1 | |
| (11) A | 996 521 690 00 | seat rail<br>outer | /R -97 | 1 | |
| (11) | 996 521 690 01 | seat rail<br>right seat<br>outer | /R 98- | 1 | |
| 12 | 986 521 643 00 | threaded plate | | 4 | |
| 13 | 996 521 603 00 | stop | | 4 | |
| 14 | 996 521 601 00 | fixing clip<br>for<br>stop | | 4 | |
| 15 | 986 521 689 00 | adapter<br>seat frame<br>front<br>left | | 2 | |
| 16 | 986 521 691 00 | adapter<br>seat frame<br>rear<br>outer | /L | 1 | |
| (16) | 986 521 690 00 | adapter<br>seat frame<br>rear<br>outer | /R | 1 | |
| 17 | 999 311 008 01 | square screw<br>M 5 X 23,6 | | 1 | |
| 18 | 986 521 687 00 | nut | | 1 | |
| 19 | 986 521 667 00 | seat adjuster guard | /LL/R<br>/RL/L | 1 | |

| Pos | Part Number | Description | Remark | Qty | Model |
|---|---|---|---|---|---|

| Model | Year | MG | SG | Illustration | Restrictions | UPD | 18:39 | 30.07.2008 | PET |
|---|---|---|---|---|---|---|---|---|---|
| 986 | 2004 | 8 | 17 | 817-18 | | 229 | | | |

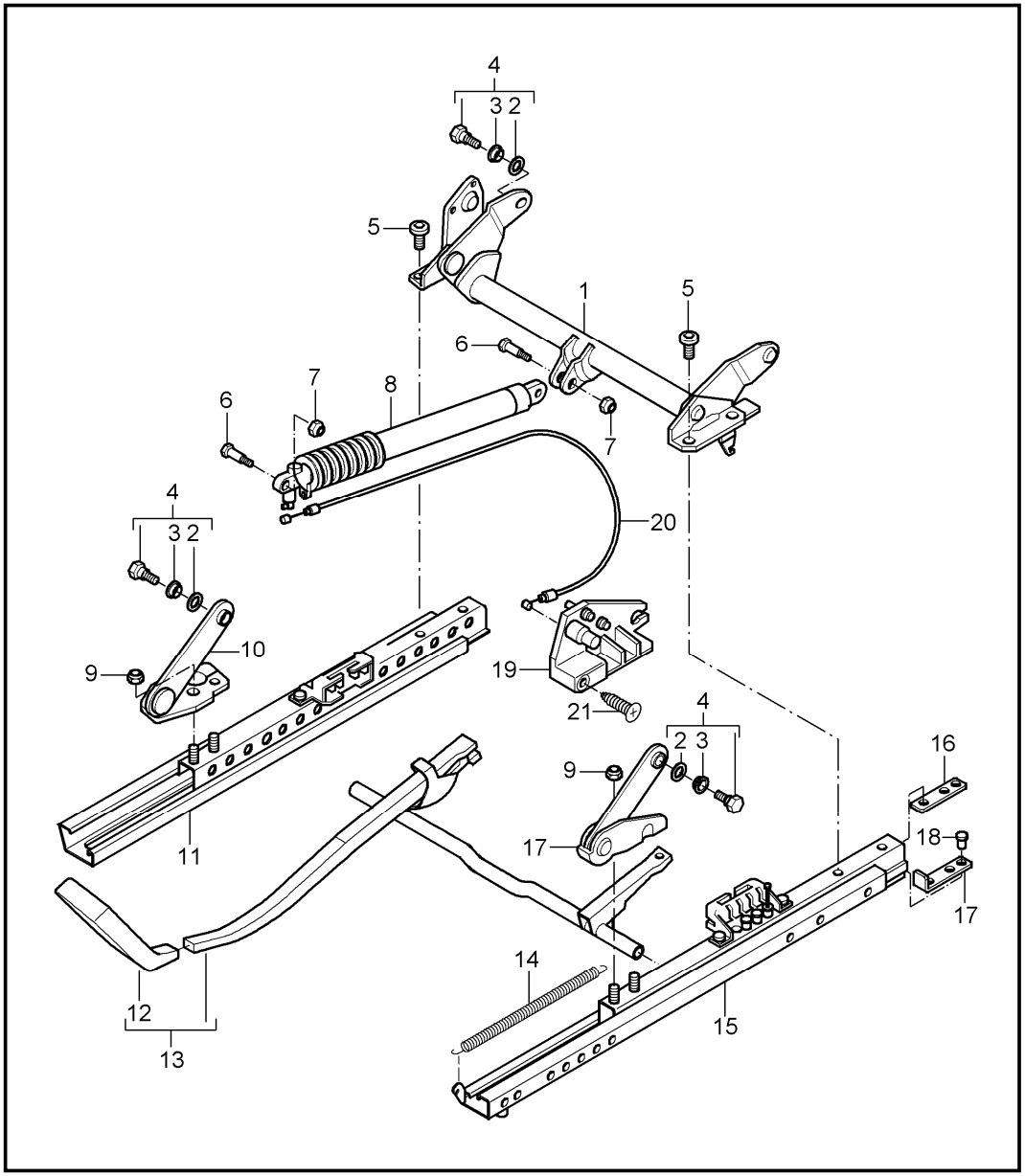


| Pos | Part Number | Description | Remark | Qty | Model |
|---|---|---|---|---|---|
| | | seat adjuster<br>standard seat<br>with<br>height adjustment | | | BOXSTER |
| 1 | 986 521 641 00 | pipe<br>rear | /L | 1 | |
| (1) | 986 521 642 00 | pipe<br>rear | /R | 1 | |
| (4) | 996 521 259 02 | screw<br>complete | | 8 | |
| 5 | 986 521 659 00 | screw<br>adapter | | 8 | |
| 6 | 999 311 008 01 | square screw<br>M 5 X 23,6 | | 2 | |
| 7 | 986 521 687 00 | nut | | 2 | |
| 8 | 996 521 615 01 | gas-pressure spring<br>seat adjuster<br>mechanical | | 2 | M 539/540 |
| 9 | 900 910 003 07 | hexagon nut<br>adapter<br>M 8 | | 8 | |
| 10 | 986 521 680 00 | adapter<br>seat frame<br>front<br>right | | 2 | |
| 11 | A 996 521 692 00 | seat rail<br>left seat<br>inner | /R -98 | 1 | |
| (11) | 996 521 692 01 | seat rail<br>left seat<br>inner | /R 98- | 1 | |
| (11) | A 996 521 691 00 | seat rail<br>right seat<br>inner | /L -98 | 1 | |
| (11) | 996 521 691 01 | seat rail<br>right seat<br>inner | /L 98- | 1 | |
| 12 | 996 521 617 00 | handle | /L 97 | 1 | |
| (12) | 996 521 617 01 | handle | /L 98- | 1 | |
| (12) | 996 521 618 00 | handle | /R 97 | 1 | |

| Pos | Part Number | Description | Remark | Qty | Model |
|---|---|---|---|---|---|
| (12) | 996 521 618 01 | handle | /R 98- | 1 | |
| 13 | 996 521 621 00 | lever<br>complete | /L 97 | 1 | |
| (13) | 996 521 621 01 | lever<br>complete | /L 98- | 1 | |
| (13) | 996 521 622 00 | lever<br>complete | /R 97 | 1 | |
| (13) | 996 521 622 01 | lever<br>complete | /R 98- | 1 | |
| 14 | 996 521 645 00 | clutch power spring | | 2 | |
| 15 | A 996 521 689 00 | seat rail<br>left seat<br>outer | /L -98 | 1 | |
| 15 | 996 521 689 01 | seat rail<br>left seat<br>outer | /L 98- | 1 | |
| (15) | A 996 521 690 00 | seat rail<br>right seat<br>outer | /R -98 | 1 | |
| (15) | 996 521 690 01 | seat rail<br>right seat<br>outer | /R 98- | 1 | |
| 16 | 986 521 643 00 | threaded plate | | 4 | |
| 17 | 986 521 679 00 | adapter<br>seat frame<br>front<br>left | | 2 | |
| 18 | 996 521 603 00 | stop | | 4 | |
| 19 | 996 521 601 00 | fixing clip<br>stop | | 4 | |
| 20 | A 986 521 675 00 | adjusting mechanism | /L -97 | 1 | |
| (20) | 996 521 675 00 | adjusting mechanism | /L 98- | 1 | |
| (20) | A 986 521 676 00 | adjusting mechanism | /R -97 | 1 | |
| (20) | 996 521 676 00 | adjusting mechanism | /R 98- | 1 | |
| 21 | 986 521 683 00 | bowden cable | | 2 | |
| 22 | 999 919 180 07 | countersunk-head screw<br>M 5 X 18 | | 2 | |

| Pos | Part Number | Description | Remark | Qty | Model |
|---|---|---|---|---|---|

| Model | Year | MG | SG | Illustration | Restrictions | UPD | 18:39 | 30.07.2008 |
|---|---|---|---|---|---|---|---|---|
| 986 | 2004 | 8 | 17 | 817-19 | | 229 | | |

PORSCHE PET PORSCHE

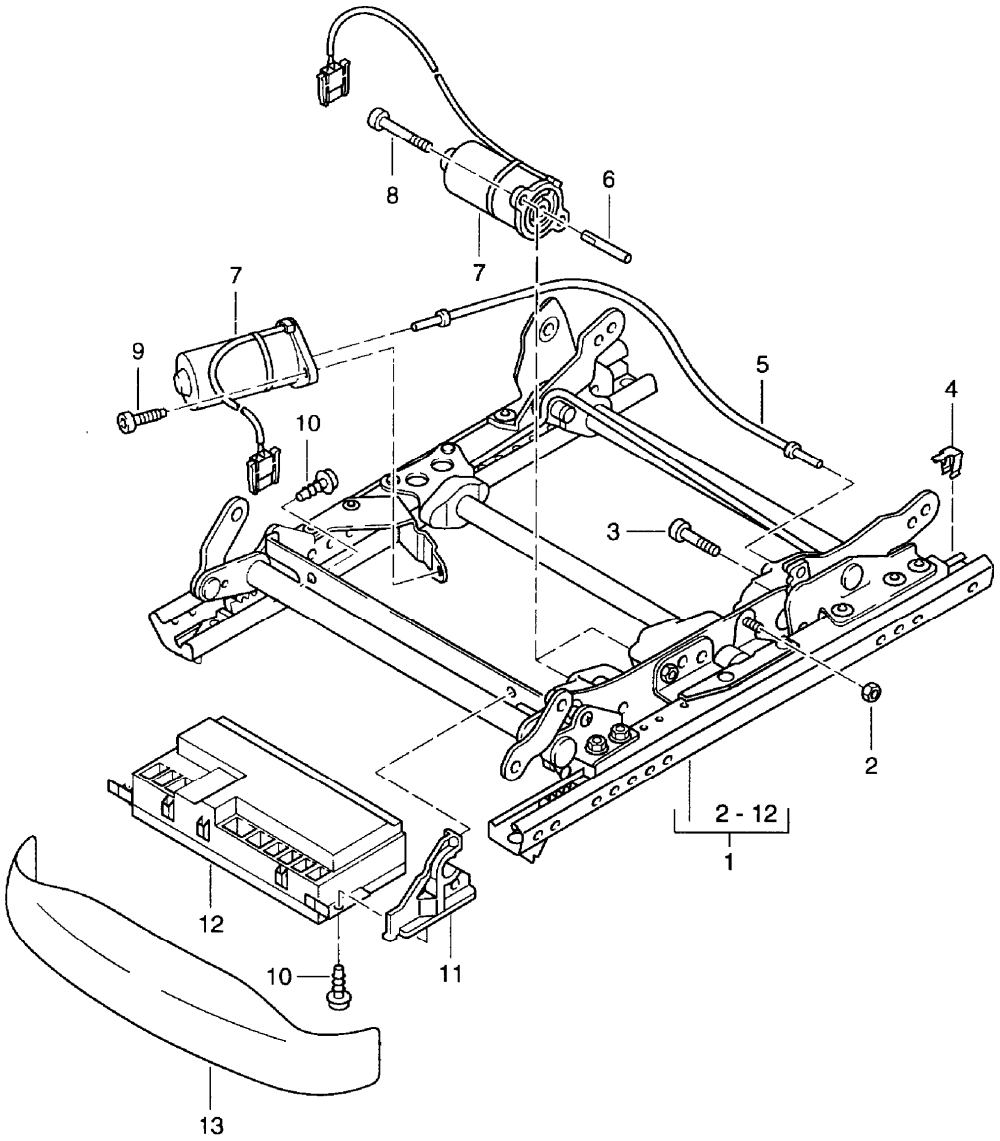


| Pos | Part Number | Description | Remark | Qty | Model |
|---|---|---|---|---|---|
| | | seat adjuster<br>comfort seat | | | BOXSTER |
| 1 | 996 521 401 02 | seat adjuster<br>complete | /L | 1 | |
| (1) | 996 521 402 02 | seat adjuster<br>complete | /R | 1 | |
| (1) | 996 521 401 03 | seat adjuster<br>complete<br>with<br>seating position control | /L -00 | 1 | M 537/538 |
| (1) | 996 521 402 03 | seat adjuster<br>complete<br>with<br>seating position control | /R -00 | 1 | M 537/538 |
| (1) | 996 521 401 07 | seat adjuster<br>complete | /L | 1 | M 437/537 |
| (1) | 996 521 402 07 | seat adjuster<br>complete | /R | 1 | M 438/538 |
| 2 | 999 084 451 02 | hexagon nut<br>M 5 | | 4 | |
| 3 | 999 073 144 02 | pan-head screw<br>M 5 X 39,3 | | 4 | |
| 4 | 996 521 647 00 | stop<br>for longitudinal adjustment | | 4 | |
| 5 | 996 521 609 00 | drive shaft<br>rear vertical adjustment | | 2 | |
| 6 | 996 521 611 00 | shaft | | 4 | |
| 7 | 996 624 322 00 | engine<br>seating position control | | X | |
| (7) | 996 624 332 00 | engine<br>seating position control | | X | M 537/538 |
| 8 | 999 073 147 02 | pan-head screw<br>TORX M 5 X 58 | | 8 | |
| 9 | 999 073 148 02 | oval-head screw<br>M 5 X 14 | | 4 | |
| 10 | 999 073 145 02 | oval-head screw<br>M 5,0 X 12 | | X | |
| 11 | 996 618 547 00 | support<br>control unit | | 4 | M 537/538 |

| Pos | Part Number | Description | Remark | Qty | Model |
|---|---|---|---|---|---|
| 12 | A 996 618 537 00 | control unit | -99 | 2 | M 537/538 |
| (12) | 996 618 537 02 | control unit | 00 | 2 | M 537/538 |
| (12) | 996 618 537 01 | control unit | 01 | 2 | M 537/538 |
| (12) | 996 618 537 03 | control unit | 02- | 2 | M 537/538 |
| 13 | 996 521 317 00 | cover<br>control unit<br>seating position control | | 2 | |
| | 01C | black | | | |

| Pos | Part Number | Description | Remark | Qty | Model |
|---|---|---|---|---|---|

| Model | Year | MG | SG | Illustration | Restrictions | UPD | 18:39 | 30.07.2008 |
|---|---|---|---|---|---|---|---|---|
| 986 | 2004 | 8 | 17 | 817-20 | | 229 | | |

PORSCHE PET PORSCHE

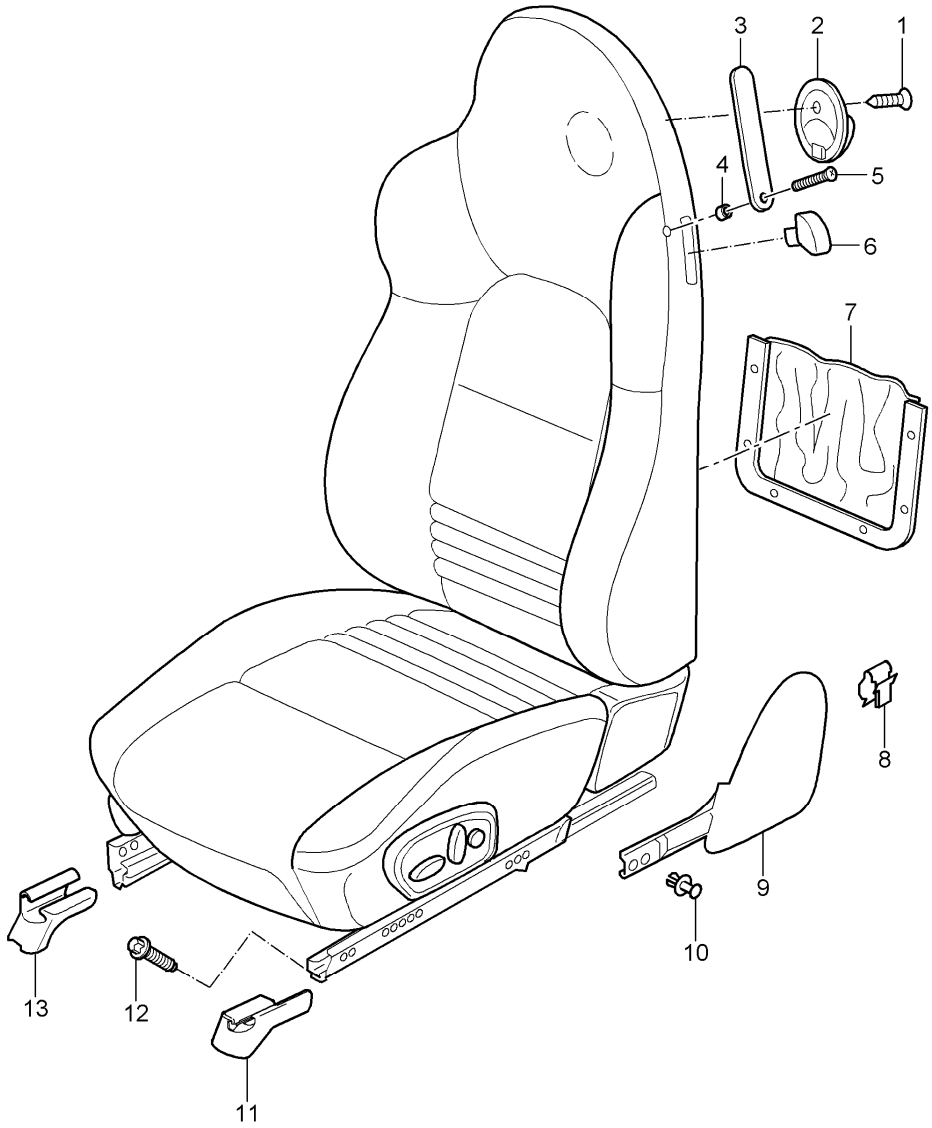


| Pos | Part Number | Description | Remark | Qty | Model |
|---|---|---|---|---|---|
| | | sports seat | | | BOXSTER |
| | | sports seat<br>complete<br>not available | | | |
| 1 | 999 919 180 07 | countersunk-head screw<br>M 5 X 18 | -99 | 2 | |
| (1) | 999 919 199 09 | countersunk-head screw<br>M 5 X 25 | 00- | 2 | |
| 2 | 986 521 363 00 | coat hook | -99 | 2 | |
| (2) | 996 521 373 00 | coat hook | 00- | 2 | |
| | A03 | black | | | |
| 3 | 986 521 345 00 | support for seatbelt | 98- | 2 | |
| | 8YR | black | | | |
| | C50 | graphite grey | | | |
| | G10 | metropole blue | | | |
| | S30 | savanna | | | |
| | J30 | nephrite green | | | |
| | M30 | boxster red | | | |
| | D11 | dark grey | 00- | | |
| | T11 | brown/natural | 00- | | |
| | P11 | cinnamon brown | | | |
| | 9Q3 | cocoa | | | |
| 4 | 999 209 050 40 | spacer sleeve | | 2 | |
| 5 | 999 919 189 07 | countersunk-head screw<br>3,5 X 25 | | 4 | |
| - | 999 507 669 40 | cone washer<br>4,3 X 12,8 | | 2 | |
| - | 999 507 670 40 | cap<br>12,8 X 14,5 | | 2 | |
| - | 999 507 671 17 | snap fastener lower part<br>lower part | | 2 | |
| 6 | 996 521 321 01 | control button | /L -98 | 2 | |

| Pos | Part Number | Description | Remark | Qty | Model |
|---|---|---|---|---|---|
| (6) | 996 521 421 00 | control button | /L 99- | 2 | |
| (6) | 996 521 322 01 | control button | /R -98 | 2 | |
| (6) | 996 521 422 00 | control button | /R 99- | 2 | |
| 7 | 996 521 313 00 | bag<br>leatherette | | 2 | |
| | A10 | black | | | |
| (7) | 996 521 313 01 | bag<br>leather | | 2 | M 983 |
| | 8YR | black | | | |
| 8 | 999 507 592 01 | cable clamp<br>cap<br>1,0 - 6,0 | | 2 | |
| 9 | 986 521 315 01 | cap | /L -99 | 1 | M009/016/375 |
| | B12 | black-grey | | | |
| (9) | 986 521 316 01 | cap | /R -99 | 1 | M009/016/376 |
| | B12 | black-grey | | | |
| (9) | 996 521 315 01 | cap | /L 00- | 1 | M009/016/375 |
| | C02 | metal grey | | | |
| (9) | 996 521 316 01 | cap | /R 00- | 1 | M009/016/376 |
| | C02 | metal grey | | | |
| 10 | 999 507 599 40 | expansion rivet<br>10 | | 2 | |
| 11 | A 996 521 362 00 | cover<br>right seat<br>inner | /L -99 | 1 | |
| | 01C | satin black | | | |
| (11) | 996 521 362 01 | cover<br>right seat<br>inner | /L 00- | 1 | |
| | 01C | satin black | | | |
| (11) | A 996 521 361 00 | cover<br>left seat<br>inner | /R -99 | 1 | |
| | 01C | satin black | | | |
| (11) | 996 521 361 01 | cover<br>left seat<br>inner | /R 00- | 1 | |
| | 01C | satin black | | | |
| 12 | A 999 141 038 07 | torx screw<br>M 10 X 26,5 | -02 | 8 | |
| (12) | 999 141 039 07 | screw<br>M 10 X 28 | 03- | 8 | IXSF/XSE |
| 13 | A 996 521 360 00 | cover<br>right seat<br>outer | /R -99 | 1 | |
| | 01C | satin black | | | |
| (13) | 996 521 360 01 | cover<br>right seat<br>outer | /R 00- | 1 | |
| | 01C | satin black | | | |
| (13) | A 996 521 359 00 | cover<br>left seat<br>outer | /L -99 | 1 | |
| | 01C | satin black | | | |
| (13) | 996 521 359 01 | cover<br>left seat<br>outer | /L 00- | 1 | |
| | 01C | satin black | | | |

| Model | Year | MG | SG | Illustration | Restrictions | UPD | 18:40 | 30.07.2008 | PORSCHE PET PORSCHE |
|---|---|---|---|---|---|---|---|---|---|
| 986 | 2004 | 8 | 17 | 817-25 | | 229 | | | |

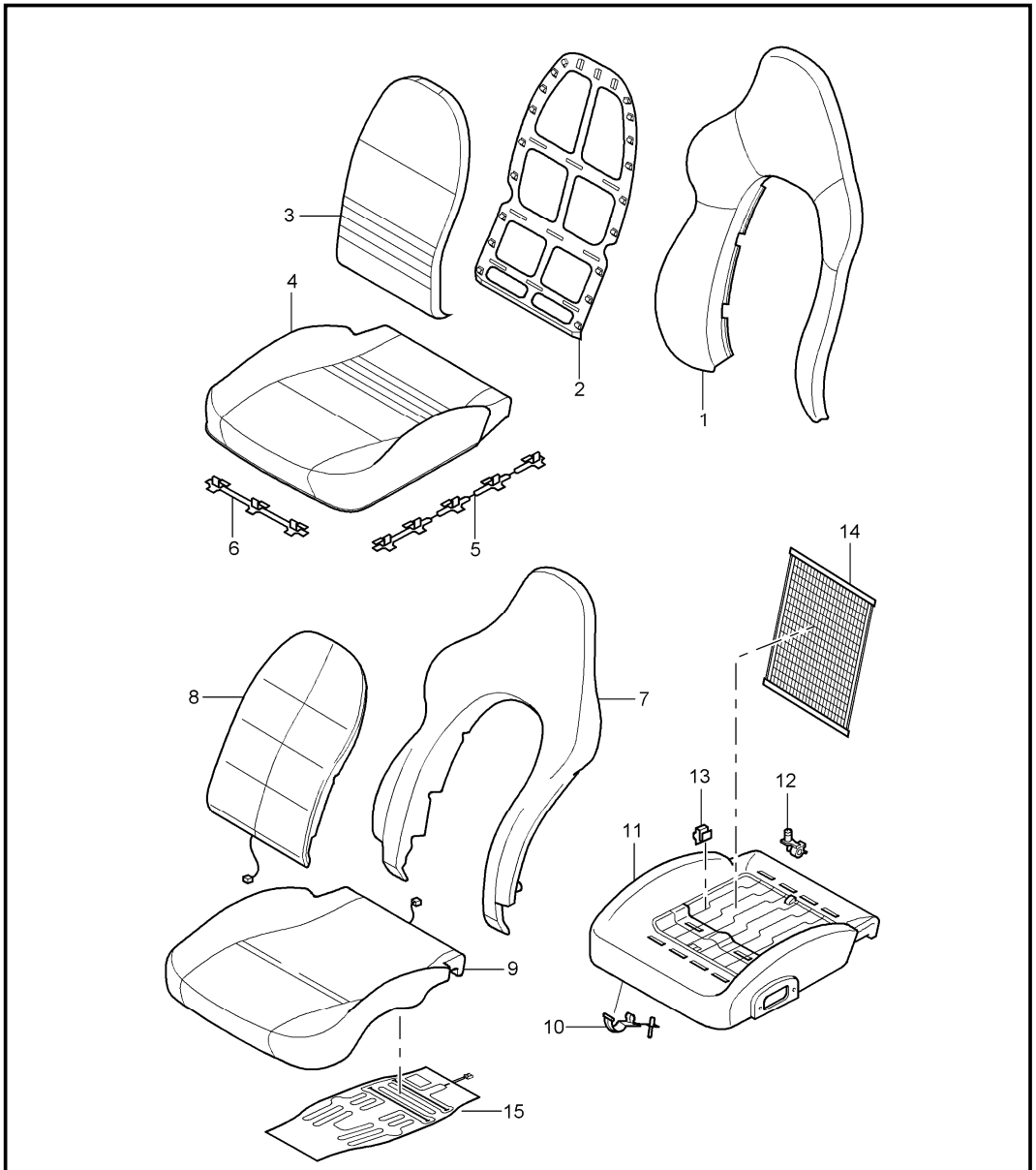


| Pos | Part Number | Description | Remark | Qty | Model |
|---|---|---|---|---|---|
| | | cover<br>foam part<br>sports seat | | | BOXSTER |
| 1 | 996 521 993 02 | backrest cover<br>with<br>porsche<br>crest<br>outer part<br>leather | 99- | 2 | |
| | 8YR | black | 99 | | |
| | C50 | graphite grey | | | |
| | G10 | metropole blue | | | |
| | S30 | savanna | | | |
| | J30 | nephrite green | | | |
| | M30 | boxster red | | | |
| | T11 | brown/natural | | | |
| | D11 | dark grey/natural | | | |
| | P11 | cinnamon brown | | | |
| | ETO | black | 00- | | |
| (1) | 996 521 155 02 | backrest cover<br>outer part | -00 | 2 | M 983 |
| | 8YR | black | | | |
| | C50 | graphite grey | | | |
| | G10 | metropole blue | | | |
| | S30 | savanna | | | |
| | J30 | nephrite green | | | |
| | M30 | boxster red | | | |
| (1) | 996 521 155 04 | backrest cover | -01 | 2 | M 983 |
| | EEF | graphite grey | | | |
| | EGF | savanna | | | |
| | EFF | metropole blue | | | |
| | ELA | nephrite green | | | |
| | ENA | boxster red | | | |

| Pos | Part Number | Description | Remark | Qty | Model |
|---|---|---|---|---|---|
| | ERZ | black | | | |
| | VRA | dark grey | | | |
| | VRB | brown/natural | | | |
| (1) | 996 521 155 06 | cover<br>backrest<br>outer part | 01- | 2 | |
| | ERZ | black | | | |
| | EEF | graphite grey | | | |
| | EGF | savanna | | | |
| | EFF | metropole blue | | | |
| | ELA | nephrite green | | | |
| | ENA | boxster red | | | |
| | FEH | cinnamon brown | | | |
| | VRA | dark grey/natural | | | |
| | VRB | brown/natural | | | |
| (1) | 996 521 155 07 | cover<br>backrest<br>outer part<br>special model<br>550 spyder | 04 | 2 | M091/375/376<br>M 983 |
| | VSY | dark grey/natural | | | |
| 2 | 996 521 551 00 | frame<br>backrest<br>centre | -00 | 2 | |
| (2) | 996 521 551 01 | frame<br>backrest<br>centre | 01- | 2 | |
| 3 | 996 521 151 01 | backrest cushion cover | -00 | 2 | M 946/983 |
| | 8YR | black | -99 | | |
| | ETO | black | 00- | | |
| | C50 | graphite grey | | | |
| | G10 | metropole blue | | | |
| | S30 | savanna | | | |
| | J30 | nephrite green | | | |
| | M30 | boxster red | | | |
| | D11 | dark grey | 00- | | |
| | T11 | brown/natural | 00- | | |
| (3) | 996 521 151 05 | backrest cushion cover<br>leather | 01- | 2 | M 946/983 |
| | ETO | black | 00- | | |
| | C50 | graphite grey | | | |
| | G10 | metropole blue | | | |
| | S30 | savanna | | | |
| | J30 | nephrite green | | | |
| | M30 | boxster red | | | |
| | D11 | dark grey | 00- | | |
| | T11 | brown/natural | 00- | | |
| | P11 | cinnamon brown | 01- | | |
| (3) | 996 521 151 09 | cover<br>backrest<br>centre<br>special model<br>550 spyder | 04 | 2 | M 375/376<br>M 091/983 |
| | VTH | cocoa | | | |
| | VSY | dark grey/natural | | | |
| 4 | 996 521 165 02 | seat cover<br>leather | -00 | 2 | M 983 |
| | EAF | black | -99 | | |
| | EEF | graphite grey | | | |
| | EFF | metropole blue | | | |
| | EGF | savanna | | | |
| | ELA | nephrite green | | | |
| | ENA | boxster red | | | |
| | ERZ | black | 00 | | |
| | VRA | dark grey | 00 | | |
| | VRB | brown/natural | 00 | | |

| Pos | Part Number | Description | Remark | Qty | Model |
|---|---|---|---|---|---|
| (4) | 996 521 165 04 | cover<br>seat cushion<br>leather<br>without heating | 01- | 2 | M 983 |
| | ERZ | black | | | |
| | EEF | graphite grey | | | |
| | EGF | savanna | | | |
| | EFF | metropole blue | | | |
| | ELA | nephrite green | | | |
| | ENA | boxster red | | | |
| | FEH | cinnamon brown | | | |
| | VRA | dark grey/natural | | | |
| | VRB | brown/natural | | | |
| (4) | 996 521 165 05 | cover<br>seat cushion<br>leather<br>with heating | 03- | 2 | M 375/376<br>M 983/IXSU |
| | ERZ | black | | | |
| | EEF | graphite grey | | | |
| | EGF | savanna | | | |
| | EFF | metropole blue | | | |
| | ELA | nephrite green | | | |
| | ENA | boxster red | | | |
| | FEH | cinnamon brown | | | |
| | VRA | dark grey/natural | | | |
| | VRB | brown/natural | | | |
| (4) | 996 521 165 06 | cover<br>seat cushion<br>leather<br>special model<br>50 JAHRE SPYDER | 04- | 2 | M091/375/376 |
| | VTH | cocoa | | | |
| | VSY | dark grey/natural | | | |
| 5 | 996 521 543 00 | clamp<br>long | -00 | 4 | |
| 6 | 996 521 541 00 | clamp<br>short | -00 | 6 | |
| 7 | 996 521 535 01 | foam part<br>backrest frame | 98 | 2 | |
| (7) | 996 521 535 02 | foam part<br>backrest frame | 99 | 2 | |
| (7) | 996 521 535 03 | foam part<br>backrest frame | 00- | 2 | |
| (8) | 996 521 531 00 | foam part<br>backrest cushion<br>without heating | 03- | 2 | |
| 8 | 996 521 531 01 | foam part<br>backrest cushion<br>with heating | 03- | 2 | M139/340/342 |
| (8) | 996 521 537 00 | foam part<br>backrest cushion<br>without heating | 03- | 2 | IXSU |
| (8) | 996 521 539 00 | foam part<br>backrest cushion<br>with heating | 03- | 2 | IXSU/M 342 |
| (9) | 996 521 521 04 | foam part<br>seat cushion<br>without heating | -00 | 2 | |
| 9 | 996 521 521 05 | foam part<br>seat cushion<br>with heating | -00 | 2 | M 139/340 |
| (9) | 996 521 523 01 | foam part<br>seat cushion<br>without heating | 03- | 2 | IXSU |
| (9) | 996 521 525 01 | foam part<br>seat cushion<br>with heating | 03- | 2 | IXSU/M 342 |
| (9) | 996 521 571 01 | foam part<br>seat cushion<br>without heating | 01- | 2 | |
| 10 | 996 521 597 00 | clip<br>cushion carrier | | 8 | |
| (10) | 996 521 937 00 | clip<br>cushion carrier | 01- | 10 | |

| Pos | Part Number | Description | Remark | Qty | Model |
|---|---|---|---|---|---|
| 11 | 996 521 509 00 | cushion carrier<br>seat cushion<br>front seat | -00 | 2 | |
| (11) | 996 521 505 00 | cushion carrier<br>seat cushion<br>front seat | 01- | 2 | |
| 12 | 999 507 506 40 | cable holder<br>5,0 | | 1 | M 539/540 |
| 13 | 999 651 314 01 | cable clamp<br>3,0 - 4,0 | | 8 | |
| 14 | 996 521 507 01 | mat<br>seat cushion<br>cushion carrier | | 1 | |
| 15 | 996 653 105 01 | heating element<br>seat surface | 01- | 1 | M139/340/342 |

| Pos | Part Number | Description | Remark | Qty | Model |
|---|---|---|---|---|---|

| Model | Year | MG | SG | Illustration | Restrictions | UPD | 18:40 | 30.07.2008 | PET |
|---|---|---|---|---|---|---|---|---|---|
| 986 | 2004 | 8 | 17 | 817-30 | | 229 | | | |

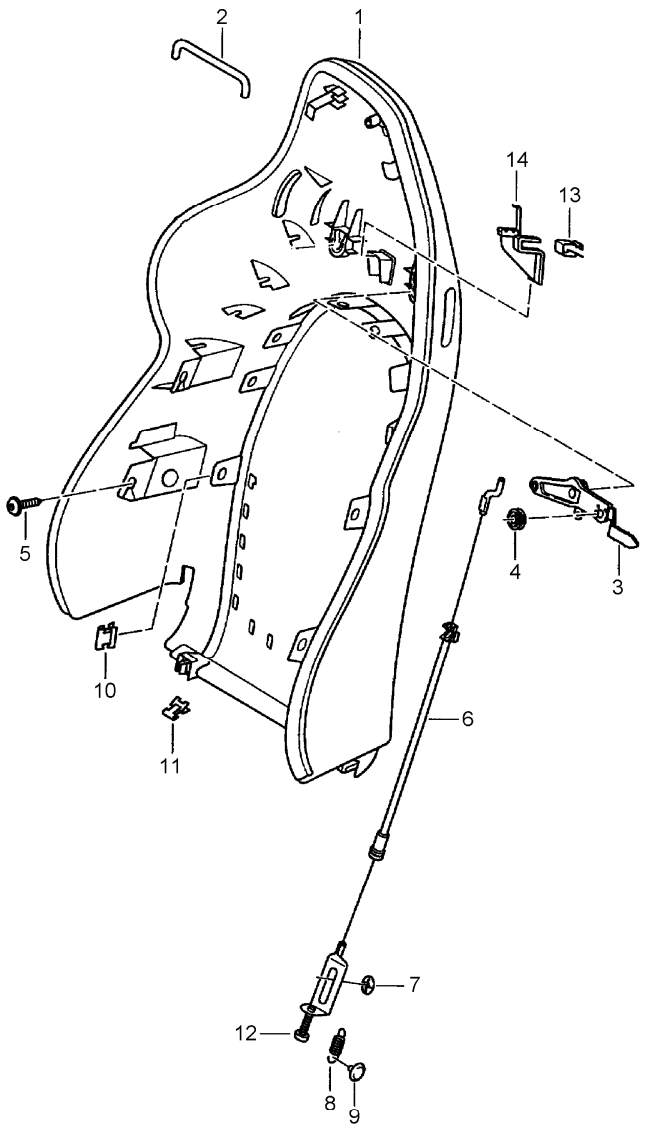


| Pos | Part Number | Description | Remark | Qty | Model |
|---|---|---|---|---|---|
| | | backrest shell<br>sports seat | 98 | | BOXSTER |
| 1 | 986 521 303 02 | backrest shell | | 2 | M 016 |
| | B12 | black-grey | | | |
| (1) | 986 521 303 03 | backrest shell<br>lacquered | -99 | 2 | M 012 |
| | C02 | metal grey | | | |
| (1) | 996 521 992 06 | backrest shell<br>sports seat<br>lacquered | 04 | 2 | M 375/376<br>IXCG |
| | V03 | sport silver | | | |
| 2 | 996 521 885 00 | foam part | | 2 | |
| 3 | 996 521 311 00 | linkage lever | /L | 2 | |
| (3) | 996 521 312 00 | linkage lever | /R | 2 | |
| 4 | 996 521 339 00 | deflection roller | | 4 | |
| 5 | 999 143 009 01 | screw<br>backrest shell<br>M 5 X 16 | | X | |
| - | 900 151 027 02 | washer<br>backrest shell<br>5,3 | | 4 | |
| 6 | 986 521 385 00 | cable | | 4 | |
| 7 | N 900 114 02 | clamping washer<br>4 | | 4 | |
| 8 | 999 522 032 00 | tension spring<br>0,7 X 7,5 X 15 | | 4 | |
| 9 | 999 703 474 40 | stopper | | 4 | |
| 10 | 999 507 594 01 | u-clamp<br>mount<br>backrest cover<br>1,0 - 2,0 | | 28 | |
| 11 | 311 881 247 | clamp<br>mount<br>cover<br>centre part | | 4 | |
| - | N 900 151 01 | clamping washer<br>5 | | 2 | |

| Pos | Part Number | Description | Remark | Qty | Model |
|---|---|---|---|---|---|
| 13 | 999 507 596 01 | u-clamp<br>1,00 - 1,50 | | 2 | |
| 14 | 996 521 341 00 | relay lever | | 2 | |
| - | 996 521 903 00 | repair kit<br>backrest locking lever<br>see technical information<br>GR. 7 BOXSTER NR. 1A/98 | | 2 | |

| Pos | Part Number | Description | Remark | Qty | Model |
|---|---|---|---|---|---|

| Model | Year | MG | SG | Illustration | Restrictions | UPD | 18:40 | 30.07.2008 | PET |
|---|---|---|---|---|---|---|---|---|---|
| 986 | 2004 | 8 | 17 | 817-35 | | 229 | | | |

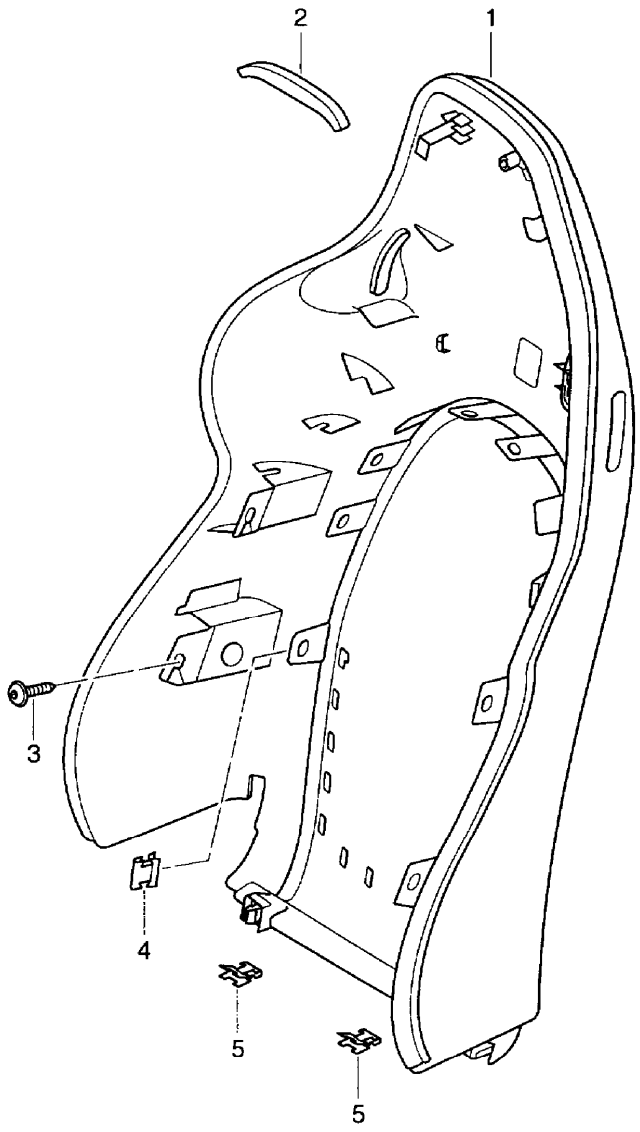


| Pos | Part Number | Description | Remark | Qty | Model |
|---|---|---|---|---|---|
| | | backrest shell<br>sports seat | 99- | | BOXSTER |
| 1 | 986 521 303 08 | backrest shell | | 2 | M 016 |
| | B12 | black-grey | 99 | | |
| (1) | 986 521 303 09 | backrest shell<br>lacquered | 99 | 2 | M 012 |
| | C02 | metal grey | | | |
| (1) | 986 521 303 11 | backrest shell<br>lacquered | 00- | 2 | M 012 |
| | C02 | metal grey | | | |
| (1) | 986 521 303 10 | backrest shell<br>lacquered | 00- | 2 | M 016 |
| | A03 | black | | | |
| 2 | 996 521 885 00 | foam part | | 2 | |
| 3 | 999 143 009 01 | screw<br>backrest shell<br>M 5 X 16 | | X | |
| - | 900 151 027 02 | washer<br>backrest shell<br>5,3 | | 4 | |
| 4 | 999 507 594 01 | u-clamp<br>mount<br>backrest cover<br>1,0 - 2,0 | | 28 | |
| 5 | 311 881 247 | clamp<br>mount<br>cover<br>centre part | | 4 | |

| Model | Year | MG | SG | Illustration | Restrictions | UPD | 18:40 | 30.07.2008 | PET |
|---|---|---|---|---|---|---|---|---|---|
| 986 | 2004 | 8 | 17 | 817-40 | | 229 | | | |

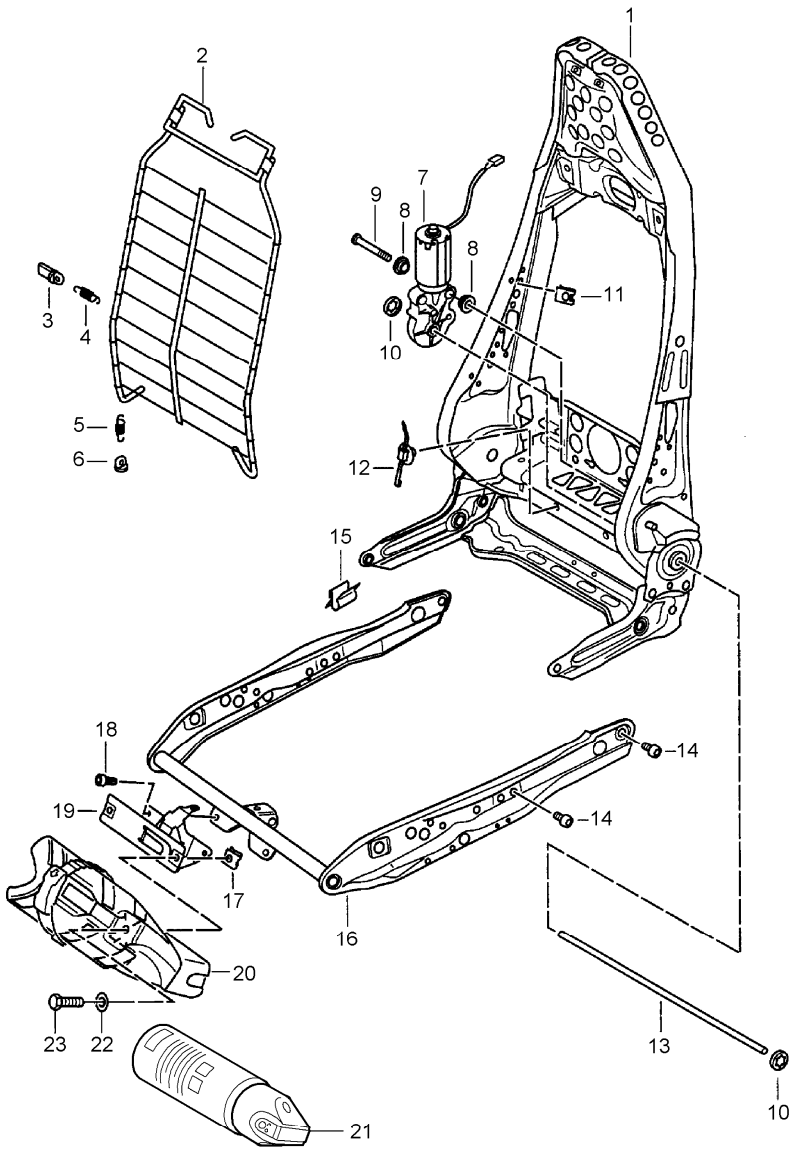


| Pos | Part Number | Description | Remark | Qty | Model |
|---|---|---|---|---|---|
| | | backrest frame<br>seat frame<br>sports seat | 98 | | BOXSTER |
| 1 | 986 521 327 02 | backrest frame | | 2 | |
| 2 | 996 521 355 01 | mat | | 2 | |
| 3 | 996 521 367 00 | support<br>spring<br>centre | | 8 | |
| 4 | 996 521 333 00 | spring<br>centre | | 4 | |
| 5 | 996 521 331 01 | spring<br>lower | | 4 | |
| 6 | 996 521 365 00 | support<br>spring<br>lower | | 4 | |
| 7 | 996 624 321 00 | engine<br>for backrest adjustment | | 2 | |
| 8 | 999 924 129 40 | bush<br>6 X 12 X 4,5 | | 4 | |
| 9 | 999 073 141 02 | oval-head screw<br>M 6 X 42,5 | | 2 | |
| 10 | 999 507 597 01 | clamping washer<br>10,0 | | 4 | |
| 11 | 999 507 598 02 | speed nut<br>M 5 | | 8 | |
| 12 | 999 513 063 40 | cable holder<br>12,0 - 35 | | 4 | |
| 13 | 996 521 343 01 | drive shaft | | 2 | |
| 14 | 999 141 027 02 | oval-head screw<br>M 8 X 10 | | 8 | |
| 16 | 986 521 227 00 | seat frame | | 2 | |
| 17 | 999 507 067 02 | speed nut<br>M 5 | | 2 | |
| 18 | 999 141 028 02 | pan-head screw<br>M 5 X 10 | | 3 | |
| 19 | 996 521 674 00 | support<br>fire extinguisher | /LL/R | 1 | M509 |

| Pos | Part Number | Description | Remark | Qty | Model |
|---|---|---|---|---|---|
| (19) | 996 521 673 00 | support<br>fire extinguisher | /RL/L | 1 | M509 |
| 20 | 996 521 607 00 | cup<br>fire extinguisher | | 1 | M509 |
| 21 | 996 722 115 00 | fire extinguisher<br>Information available<br>Information available | | 1 | M509 |
| 22 | 900 151 027 02 | washer<br>5,3 | | 2 | |
| 23 | N 044 734 1 | pan-head screw<br>M 5 X 16 | | 2 | |

| Model | Year | MG | SG | Illustration | Restrictions | UPD | 18:40 | 30.07.2008 | PORSCHE | PET | PORSCHE |
|---|---|---|---|---|---|---|---|---|---|---|---|
| 986 | 2004 | 8 | 17 | 817-42 | | 229 | | | | | |

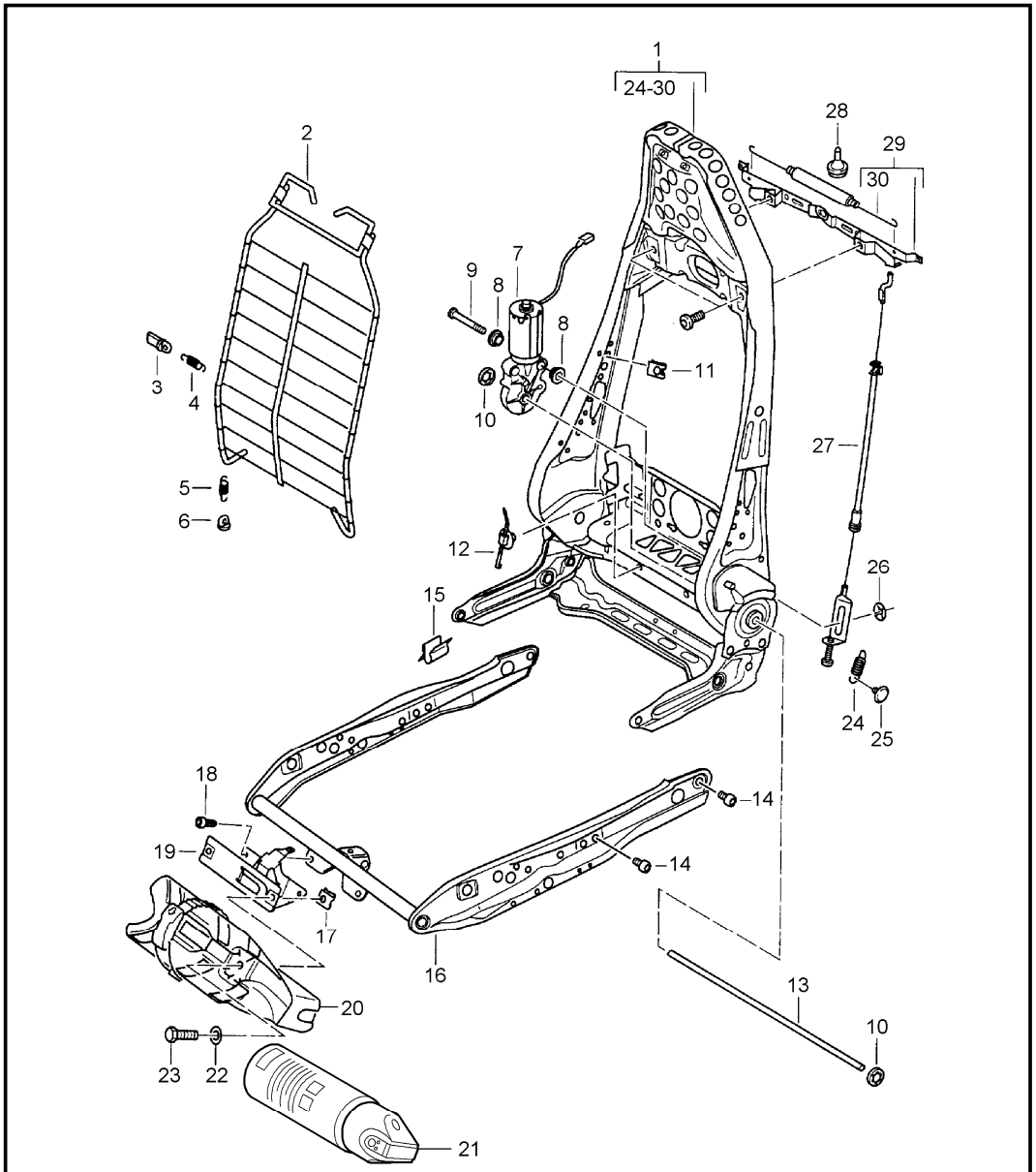


| Pos | Part Number | Description | Remark | Qty | Model |
|---|---|---|---|---|---|
| | | backrest frame<br>seat frame<br>sports seat | | | BOXSTER |
| 1 | 986 521 327 03 | backrest frame | | 2 | |
| 2 | 996 521 355 01 | mat | | 2 | |
| 3 | 996 521 367 00 | support<br>spring<br>centre | | 8 | |
| 4 | 996 521 333 00 | spring<br>centre | | 4 | |
| 5 | 996 521 331 01 | spring<br>lower | | 4 | |
| 6 | 996 521 365 00 | support<br>spring<br>lower | | 4 | |
| 7 | 996 624 321 00 | engine<br>for backrest adjustment | | 2 | |
| 8 | 999 924 129 40 | bush<br>6 X 12 X 4,5 | | 4 | |
| 9 | 999 073 141 02 | oval-head screw<br>M 6 X 42,5 | | 2 | |
| 10 | 999 507 597 01 | clamping washer<br>10,0 | | 4 | |
| 11 | 999 507 598 02 | speed nut<br>M 5 | | 8 | |
| 12 | 999 513 063 40 | cable holder<br>12,0 - 35 | | 4 | |
| 13 | 996 521 343 01 | drive shaft | | 2 | |
| 14 | 999 141 027 02 | oval-head screw<br>M 8 X 10 | | 8 | |
| 16 | 986 521 227 00 | seat frame | | 2 | |
| 17 | 999 507 067 02 | speed nut<br>M 5 | | 2 | |
| 18 | 999 141 028 02 | pan-head screw<br>M 5 X 10 | | 3 | |
| 19 | 996 521 674 00 | support<br>fire extinguisher | /LL/R | 1 | M509 |

| Pos | Part Number | Description | Remark | Qty | Model |
|---|---|---|---|---|---|
| (19) | 996 521 673 00 | support<br>fire extinguisher | /RL/L | 1 | M509 |
| 20 | 996 521 607 00 | cup<br>fire extinguisher | | 1 | M509 |
| 21 | 996 722 115 00 | fire extinguisher<br>Information available<br>Information available | | 1 | M509 |
| 22 | 900 151 027 02 | washer<br>5,3 | | 2 | |
| 23 | N 044 734 1 | pan-head screw<br>M 5 X 16 | | 2 | |
| 24 | 999 522 032 00 | tension spring<br>0,7 X 7,5 X 15 | | 4 | |
| 25 | 999 703 474 40 | stopper | | 4 | |
| 26 | N 900 114 02 | clamping washer<br>4 | | 4 | |
| 27 | 996 521 185 00 | cable | | 4 | |
| | | mount<br>backrest locking lever | | | |
| 28 | 996 521 403 00 | rubber buffer | | 2 | |
| 29 | 996 521 175 00 | backrest locking lever | | 2 | |
| 30 | 996 521 195 00 | clutch power spring | | 2 | |

| Model | Year | MG | SG | Illustration | Restrictions | UPD | 18:41 | 30.07.2008 |
|---|---|---|---|---|---|---|---|---|
| 986 | 2004 | 8 | 17 | 817-45 | | 229 | | |

PORSCHE PET PORSCHE

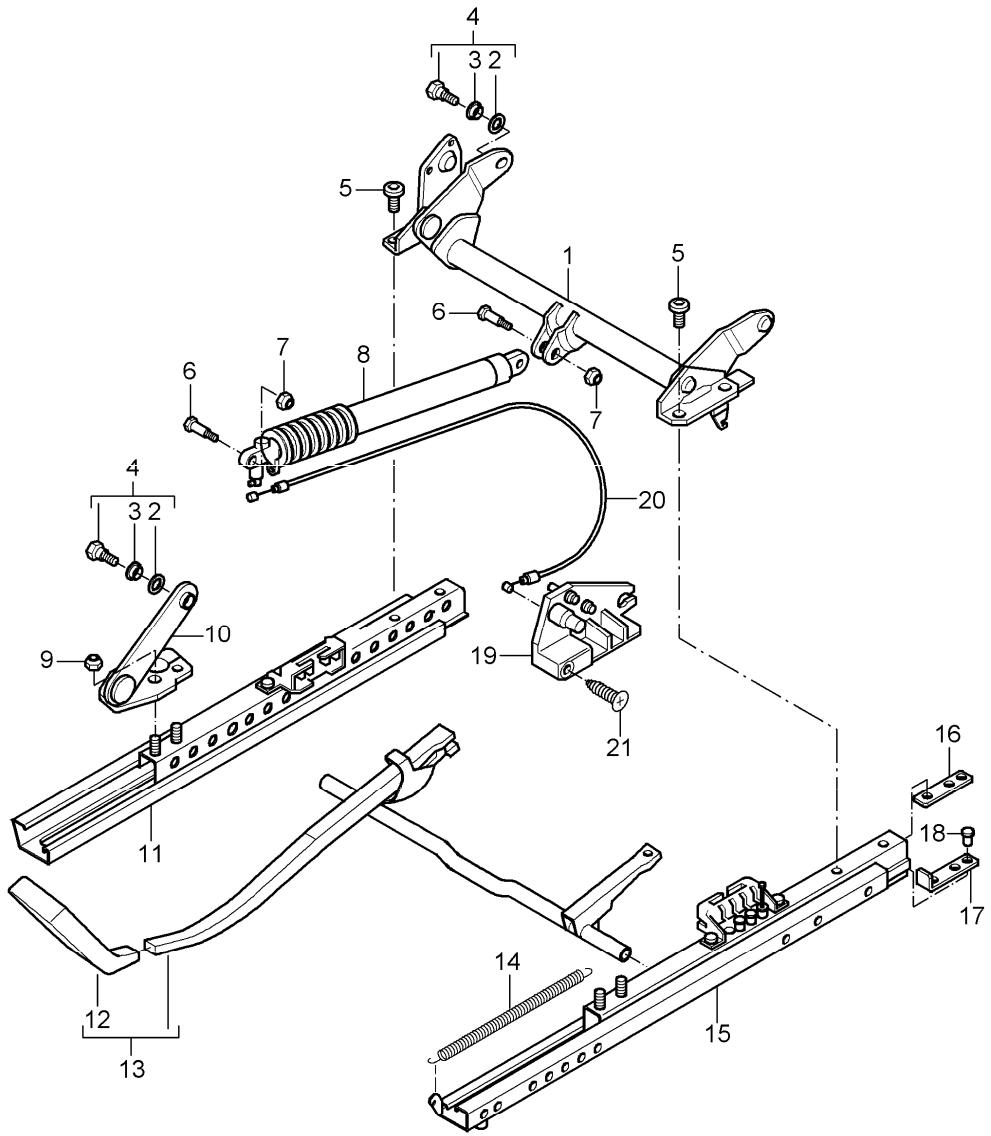


| Pos | Part Number | Description | Remark | Qty | Model |
|---|---|---|---|---|---|
| | | seat adjuster<br>sports seat<br>with<br>height adjustment | | | BOXSTER |
| 1 | 986 521 641 00 | pipe<br>rear | /L | 1 | |
| (1) | 986 521 642 00 | pipe<br>rear | /R | 1 | |
| (4) | 996 521 259 02 | screw<br>complete<br>short | | 6 | |
| 5 | 986 521 659 00 | screw<br>adapter | | 8 | |
| 6 | 999 311 008 01 | square screw<br>gas-pressure spring<br>M 5 X 23,6 | | 2 | |
| 7 | 986 521 687 00 | nut<br>gas-pressure spring | | 2 | |
| 8 | 996 521 615 01 | gas-pressure spring | | 1 | M 539/540 |
| 9 | 900 910 003 07 | hexagon nut<br>adapter<br>M 8 | | 8 | |
| (10) | 986 521 679 00 | adapter | /L | 2 | |
| 10 | 986 521 680 00 | adapter<br>seat frame<br>front | /R | 2 | |
| 11 | A 996 521 692 00 | seat rail<br>left seat<br>inner | /R -98 | 1 | |
| (11) | 996 521 692 01 | seat rail<br>left seat<br>inner | /R 98- | 1 | |
| (11) | A 996 521 691 00 | seat rail<br>right seat<br>inner | /L -98 | 1 | |
| (11) | 996 521 691 01 | seat rail<br>right seat<br>inner | /L 98- | 1 | |
| 12 | 996 521 617 01 | handle | /L | 1 | |
| (12) | 996 521 618 01 | handle | /R | 1 | |

| Pos | Part Number | Description | Remark | Qty | Model |
|---|---|---|---|---|---|
| 13 | 996 521 621 01 | lever<br>complete | /L | 1 | |
| (13) | 996 521 622 01 | lever<br>complete | /R | 1 | |
| 14 | 996 521 645 00 | clutch power spring | | 2 | |
| 15 | A 996 521 689 00 | seat rail<br>left seat<br>outer | /L -98 | 1 | |
| 15 | 996 521 689 01 | seat rail<br>left seat<br>outer | /L 98- | 1 | |
| (15) | A 996 521 690 00 | seat rail<br>right seat<br>outer | /R -98 | 1 | |
| (15) | 996 521 690 01 | seat rail<br>right seat<br>outer | 98- | 1 | |
| 16 | 986 521 643 00 | threaded plate | | 4 | |
| (17) | 996 521 603 01 | stop | | 4 | |
| 18 | 996 521 601 00 | fixing clip<br>stop | | 4 | |
| 19 | 996 521 675 00 | adjusting mechanism | /L | 1 | |
| (19) | 996 521 676 00 | adjusting mechanism | /R | 1 | |
| 20 | 986 521 683 00 | bowden cable | | 2 | |
| 21 | 999 919 180 07 | countersunk-head screw<br>M 5 X 18 | | 2 | |

| Pos | Part Number | Description | Remark | Qty | Model |
|---|---|---|---|---|---|

| Model | Year | MG | SG | Illustration | Restrictions | UPD | 18:41 | 30.07.2008 | PET |
|---|---|---|---|---|---|---|---|---|---|
| 986 | 2004 | 8 | 17 | 817-50 | | 229 | | | |

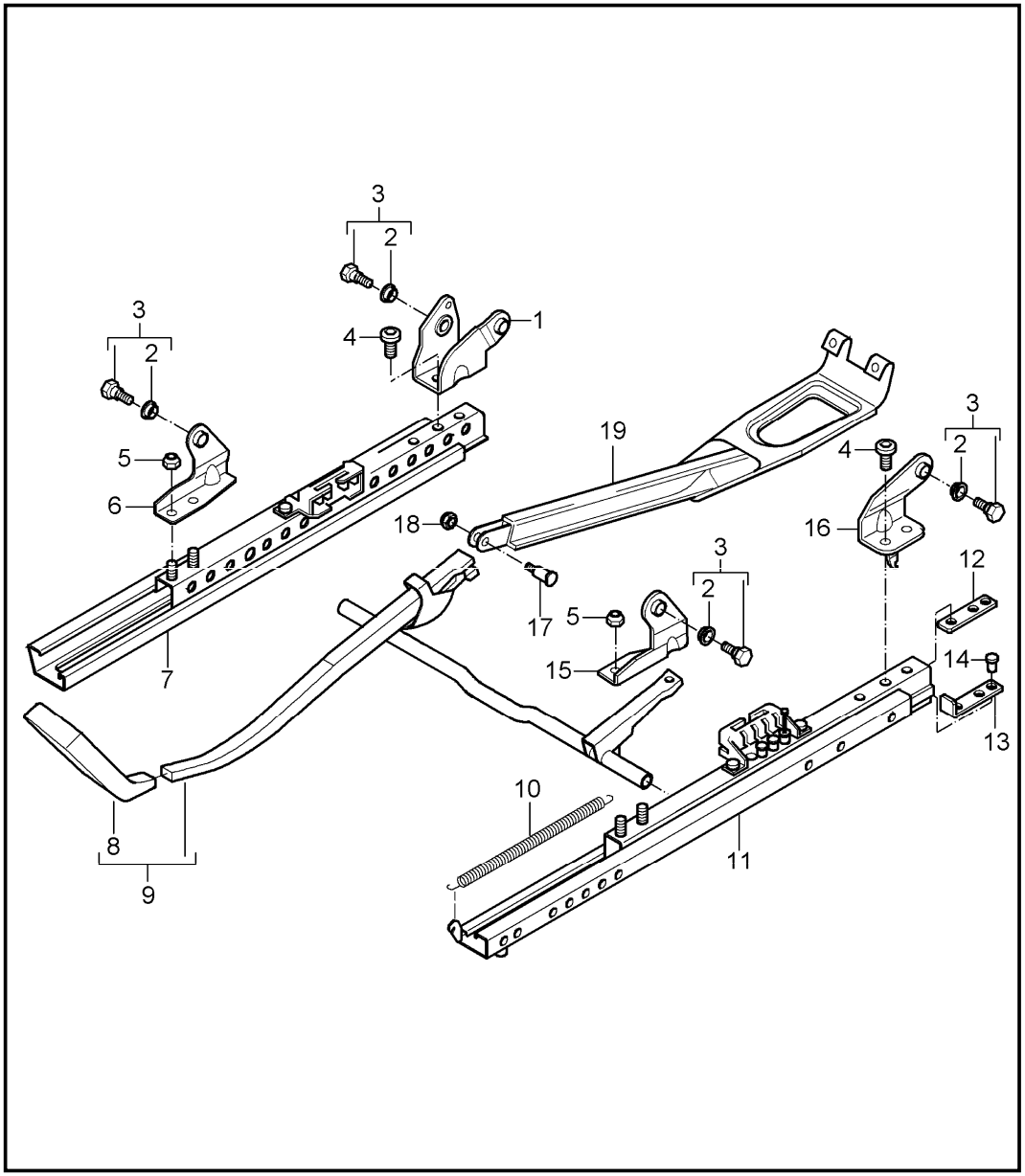


| Pos | Part Number | Description | Remark | Qty | Model |
|---|---|---|---|---|---|
| | | seat adjuster<br>sports seat | | | BOXSTER |
| 1 | 986 521 639 00 | adapter<br>seat-belt buckle<br>seat frame<br>inner rear | /L | 1 | |
| (1) | 986 521 640 00 | adapter<br>seat-belt buckle<br>seat frame<br>inner rear | /R | 1 | |
| | | complete<br>long | | | |
| (3) | 996 521 259 01 | screw<br>complete<br>short | -98 | 6 | |
| (3) | 996 521 259 02 | screw<br>complete<br>short | 98- | 6 | |
| 4 | 986 521 659 00 | screw<br>adapter | | 8 | |
| 5 | 900 910 003 07 | hexagon nut<br>adapter<br>M 8 | | 8 | |
| 6 | 986 521 692 00 | adapter<br>seat frame<br>front<br>right | | 2 | |
| 7 | A 996 521 692 00 | seat rail<br>left seat<br>inner | /R -98 | 1 | M 375 |
| (7) | 996 521 692 01 | seat rail<br>left seat<br>inner | /R 98- | 1 | M 375 |
| (7) | A 996 521 691 00 | seat rail<br>right seat<br>inner | /L -98 | 1 | M 376 |
| (7) | 996 521 691 01 | seat rail<br>right seat<br>inner | /L 98- | 1 | M 376 |
| 8 | 996 521 617 01 | handle | /L | 1 | |
| (8) | 996 521 618 01 | handle | /R | 1 | |

| Pos | Part Number | Description | Remark | Qty | Model |
|---|---|---|---|---|---|
| 9 | 996 521 621 01 | lever<br>complete | /L | 1 | |
| (9) | 996 521 622 01 | lever<br>complete | /R | 1 | |
| 10 | 996 521 645 00 | clutch power spring | | 2 | |
| 11 | A 996 521 689 00 | seat rail<br>left seat<br>outer | /L -98 | 1 | M 375 |
| (11) | 996 521 689 01 | seat rail<br>left seat<br>outer | /L 98- | 1 | M 375 |
| (11) | A 996 521 690 00 | seat rail<br>right seat<br>outer | /R -98 | 1 | M 376 |
| (11) | 996 521 690 01 | seat rail<br>right seat<br>outer | /R 98- | 1 | M 376 |
| 12 | 986 521 643 00 | threaded plate | | 4 | |
| (13) | 996 521 603 01 | stop | | 4 | |
| 14 | 996 521 601 00 | fixing clip<br>stop | | 4 | |
| 15 | 986 521 689 00 | adapter<br>seat frame<br>front<br>left | | 2 | |
| 16 | 986 521 691 00 | adapter<br>seat frame<br>rear<br>outer | /L | 1 | |
| (16) | 986 521 690 00 | adapter<br>seat frame<br>rear<br>outer | /R | 1 | |
| 16 | 999 311 008 01 | square screw<br>M 5 X 23,6 | | 1 | |
| 17 | 986 521 687 00 | nut | | 1 | |
| 18 | 986 521 667 00 | seat adjuster guard | /LL/R<br>/RL/L | 1 | |

| Pos | Part Number | Description | Remark | Qty | Model |
|---|---|---|---|---|---|

| Model | Year | MG | SG | Illustration | Restrictions | UPD | 18:41 | 30.07.2008 | PORSCHE PET PORSCHE |
|---|---|---|---|---|---|---|---|---|---|
| 986 | 2004 | 8 | 17 | 817-60 | | 229 | | | |

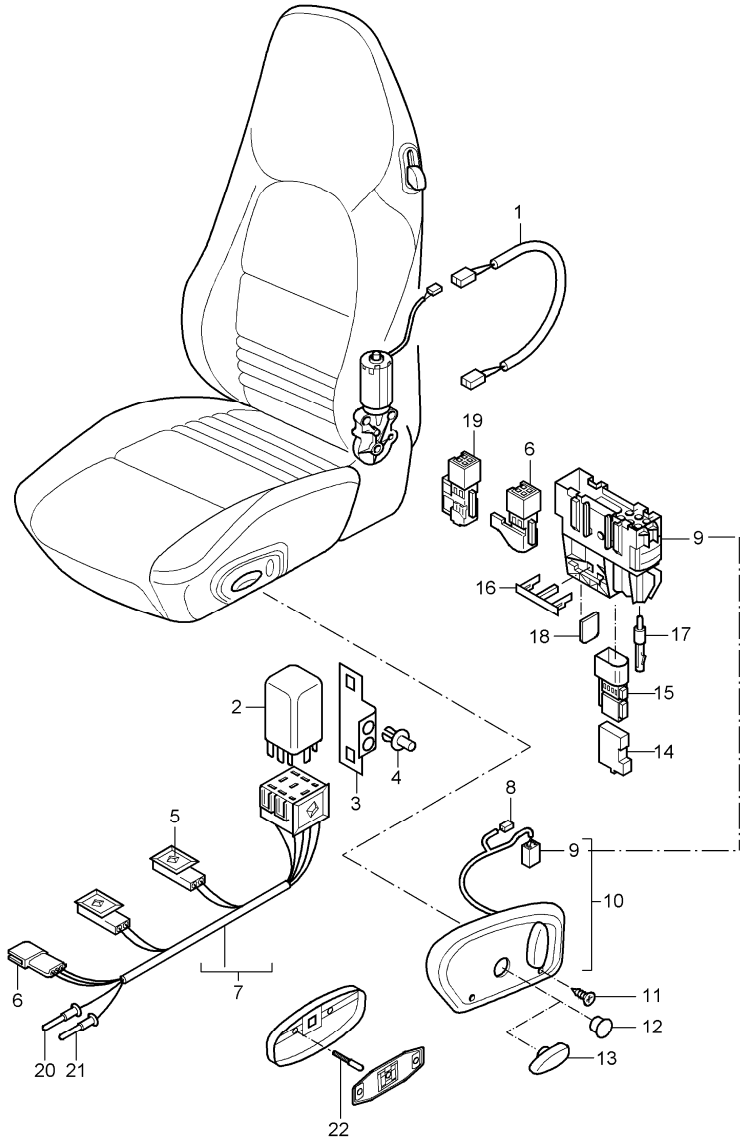


| Pos | Part Number | Description | Remark | Qty | Model |
|---|---|---|---|---|---|
| | | wiring harnesses<br>switch<br>standard seat<br>sports seat | | | BOXSTER |
| 1 | 996 612 543 00 | wiring harness<br>for backrest adjustment | | 2 | |
| - | 999 513 052 40 | tie-wrap | | 1 | |
| 2 | 996 618 521 00 | control unit<br>seat heater | | 2 | M 342 |
| 3 | 996 618 531 00 | support<br>control unit | | 2 | M 342 |
| 4 | 999 591 712 40 | expansion rivet<br>6,0 X 12,0 | -02 | 2 | |
| (4) | 900 143 191 02 | tapping screw<br>support | 02- | 4<br>4 | M 342 |
| 5 | 999 652 748 40 | pin connector socket<br>2-pole<br>seat heater | | 2 | |
| 6 | 999 650 216 40 | pin connector socket<br>4-pole<br>black | | 1 | |
| 7 | A 996 612 540 00 | wiring harness<br>seat heater | -97 | 2 | M 139/340 |
| (7) | 996 612 540 01 | wiring harness<br>seat heater | 98- | 2 | M139/340/342 |
| 8 | 999 652 747 40 | pin connector socket<br>2-pole<br>for backrest adjustment | | 1 | |
| 9 | 999 650 180 40 | pin connector socket<br>6-pole<br>wiring harness<br>passenger compartment | | 2 | |
| 10 | 996 613 713 00 | switch<br>standard seat<br>sports seat<br>complete<br>with<br>handle<br>for backrest adjustment | /L | 1 | M 011/016 |
| | EBO | satin black/black-grey | | | |

| Pos | Part Number | Description | Remark | Qty | Model |
|---|---|---|---|---|---|
| (10) | 996 613 714 00 | switch<br>standard seat<br>sports seat<br>complete<br>with<br>handle<br>for backrest adjustment | /R | 1 | M 011/016 |
| | EBO | satin black/black-grey | | | |
| (10) | 996 613 713 01 | switch<br>standard seat<br>sports seat<br>complete<br>with<br>handle<br>for backrest adjustment | /L | 1 | M010/012/016 |
| | EJS | metal grey/black | 99- | | |
| | EJM | granite grey<br>satin black | 99 | | |
| | A03 | black | 00- | | |
| (10) | 996 613 714 01 | switch<br>standard seat<br>sports seat<br>complete<br>with<br>handle<br>for backrest adjustment | /R | 1 | M010/012/016 |
| | EJS | metal grey/black | 99- | | |
| | EJM | granite grey<br>satin black | 99 | | |
| | A03 | black | 00- | | |
| 11 | 999 919 173 02 | countersunk-head screw<br>3,0 X 18 | | 4 | |
| 12 | 996 613 711 00 | dummy plug<br>switch | | 2 | |
| | 01C | satin black | | | |
| 13 | 986 521 627 00 | handle<br>height adjustment | /L | 1 | M 539 |
| (13) | 986 521 628 00 | handle<br>height adjustment | /R | 1 | M 540 |
| 14 | 999 650 248 40 | cap | | 2 | |
| 15 | 999 650 250 40 | pin connector socket<br>8-pole | | 2 | |
| 16 | 999 650 247 40 | slide<br>6-pole | | 2 | |
| 17 | 999 650 225 40 | pin<br>2,5 | | 2 | |
| 18 | 999 652 960 40 | lid | | 2 | |
| 19 | 999 650 218 40 | pin connector socket<br>4-pole<br>white | | 2 | |
| 20 | 999 652 570 22 | connector<br>0.5 - 1.0 QMM | | X | |
| 21 | 999 652 571 22 | connector<br>1.0 - 2.5 QMM | | X | |
| 22 | 996 613 955 00 | control button<br>seat adjuster<br>repair kit | 02- | 1 | M 437/438 |

| Model | Year | MG | SG | Illustration | Restrictions | UPD | 18:41 | 30.07.2008 | PORSCHE PET PORSCHE |
|---|---|---|---|---|---|---|---|---|---|
| 986 | 2004 | 8 | 17 | 817-65 | | 229 | | | |

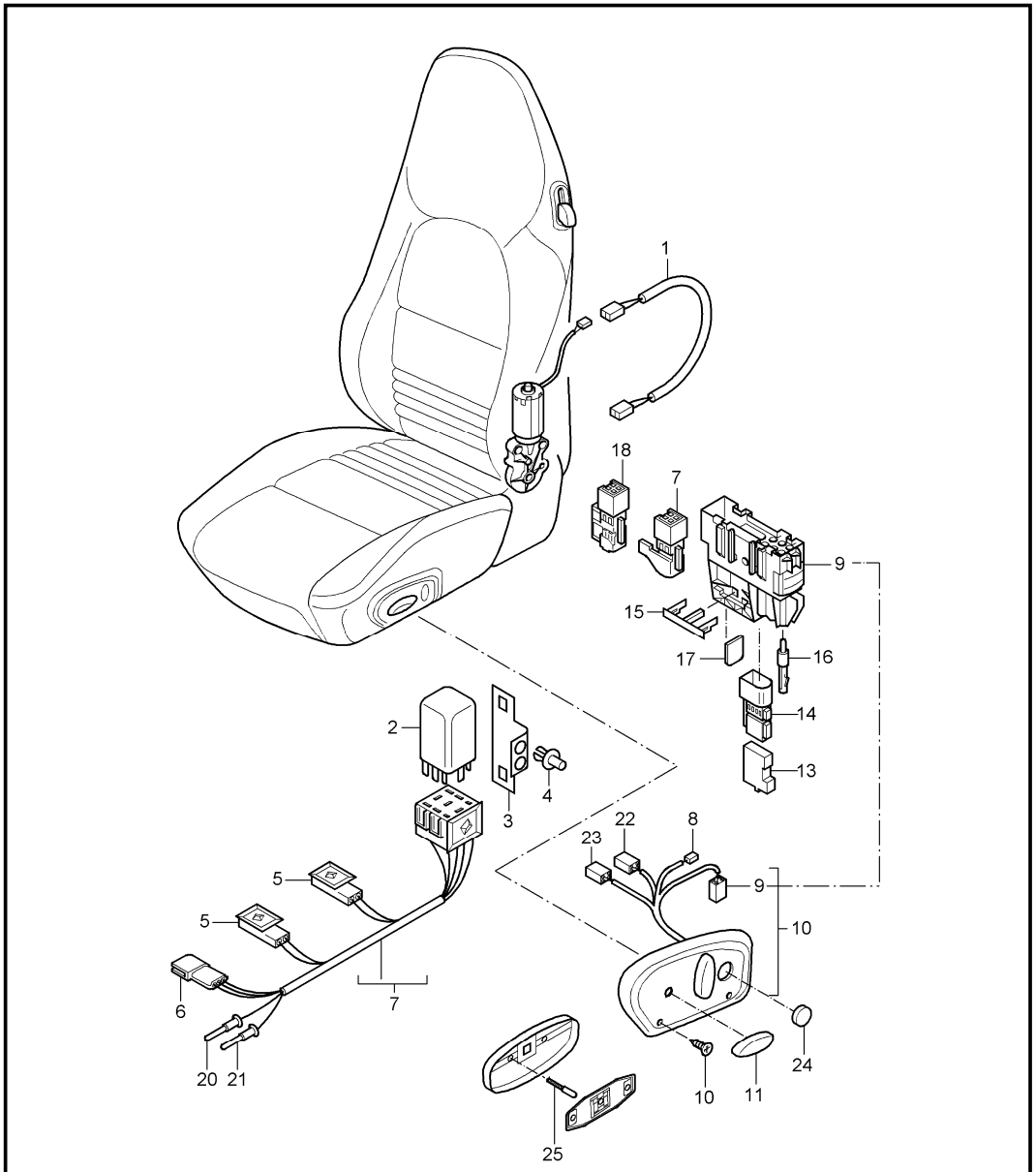


| Pos | Part Number | Description | Remark | Qty | Model |
|---|---|---|---|---|---|
| | | wiring harnesses<br>switch<br>comfort seat | | | BOXSTER |
| 1 | 996 612 543 00 | wiring harness | | 2 | |
| (1) | 996 612 544 00 | wiring harness<br>for backrest adjustment | | 2 | M 537/538 |
| - | 999 513 052 40 | tie-wrap | | 1 | |
| 2 | 996 618 521 00 | control unit<br>seat heater | | 2 | M 342 |
| 3 | 996 618 531 00 | support<br>control unit | | 2 | M 342 |
| 4 | 999 591 712 40 | expansion rivet<br>support<br>6,0 X 12,0 | -02 | 2 | |
| (4) | 900 143 191 02 | tapping screw<br>support<br>ST 3,9 X 6,5 | 02- | 4 | M 342 |
| 5 | 999 652 748 40 | pin connector socket<br>2-pole<br>seat heater | | 2 | |
| 6 | 999 650 216 40 | pin connector socket<br>4-pole<br>black | | 1 | |
| 7 | 996 612 540 01 | wiring harness<br>seat heater | 98- | 2 | |
| 8 | 999 652 747 40 | pin connector socket<br>2-pole<br>for backrest adjustment | | 1 | |
| 9 | 999 650 180 40 | pin connector socket<br>6-pole<br>wiring harness<br>passenger compartment | | 2 | |
| 10 | 996 613 715 00 | switch<br>comfort seat<br>complete | /RL/L 98 | 1 | M 011/016 |
| | EBO | satin black/black-grey | | | |
| (10) | 996 613 715 00 | switch<br>comfort seat<br>complete | /LL/R 98 | 1 | M 011/016 |
| | EBO | satin black/black-grey | | | |

| Pos | Part Number | Description | Remark | Qty | Model |
|---|---|---|---|---|---|
| (10) | 996 613 715 01 | switch<br>comfort seat | /RL/L | 1 | |
| | EJM | granite grey | 98- | | |
| | A03 | black | 00- | | |
| (10) | 996 613 716 01 | switch<br>comfort seat<br>complete | /LL/R | 1 | |
| | EJM | granite grey | 98- | | M 010 |
| | A03 | black | 00- | | M 016 |
| | P13 | cinnamon brown | 01- | | |
| (10) | 996 613 717 00 | switch<br>comfort seat<br>lumbar support<br>complete | /RL/L-99 | 1 | M 011/016 |
| | EBO | satin black/black-grey | | | |
| (10) | 996 613 718 00 | switch<br>comfort seat<br>lumbar support<br>complete | /LL/R-99 | 1 | M 011/016 |
| | EBO | satin black/black-grey | | | |
| (10) | 996 613 717 01 | switch<br>comfort seat<br>lumbar support<br>complete | /RL/L | 1 | |
| | EJM | granite grey | 99 | | M 010 |
| | A03 | black | 00- | | M 016 |
| (10) | 996 613 718 01 | switch<br>comfort seat<br>lumbar support<br>complete | /LL/R | 1 | |
| | EJM | granite grey | 99 | | M 010 |
| | A03 | black | 00- | | M 016 |
| (10) | 996 613 719 00 | switch<br>comfort seat<br>seating position control<br>complete | /LL/L-99 | 1 | M 011/016 |
| | EBO | satin black/black-grey | | | |
| (10) | 996 613 720 00 | switch<br>comfort seat<br>seating position control<br>complete | /RL/R-99 | 1 | M 011/016 |
| | EBO | satin black/black-grey | | | |
| (10) | 996 613 719 01 | switch<br>comfort seat<br>seating position control<br>complete | /LL/L | 1 | M 437/537 |
| | EJM | granite grey | -99 | | M 010 |
| | A03 | black | 00- | | M 016 |
| (10) | 996 613 720 01 | switch<br>comfort seat<br>seating position control<br>complete | /RL/R | 1 | M 438/538 |
| | EJM | granite grey | -99 | | M 010 |
| | A03 | black | 00- | | M 016 |
| (10) | 996 613 721 00 | switch<br>comfort seat<br>seating position control<br>lumbar support<br>complete | /LL/L-99 | 1 | M 011/016 |
| | EBO | satin black/black-grey | | | |
| (10) | 996 613 722 00 | switch<br>comfort seat<br>seating position control<br>lumbar support<br>complete | /RL/R-99 | 1 | M 011/016 |
| | EBO | satin black/black-grey | | | |
| (10) | 996 613 721 01 | switch | /LL/L00- | 1 | M 016/437 |
| | A03 | black | | | M 537/586 |
| (10) | 996 613 722 01 | switch<br>comfort seat<br>seating position control<br>lumbar support<br>complete | /RL/R | 1 | |
| | EJM | granite grey | -99 | | M 010 |
| | A03 | black | 00- | | M 016 |

| Pos | Part Number | Description | Remark | Qty | Model |
|---|---|---|---|---|---|
| 11 | 986 521 627 00 | handle<br>for<br>height adjustment | /L | 1 | |
| (11) | 986 521 628 00 | handle<br>for<br>height adjustment | /R | 1 | |
| 12 | 999 919 173 02 | countersunk-head screw<br>3,0 X 18 | | 4 | |
| 13 | 999 650 248 40 | cap | | 2 | |
| 14 | 999 650 250 40 | pin connector socket<br>8-pole | | 2 | |
| 15 | 999 650 247 40 | slide<br>6-pole | | 2 | |
| 16 | 999 650 225 40 | pin<br>2,5 | | 2 | |
| 17 | 999 652 960 40 | lid | | 2 | |
| 18 | 999 650 218 40 | pin connector socket<br>4-pole<br>white | | 2 | |
| 20 | 999 652 570 22 | connector<br>0.5 - 1.0 QMM | | X | |
| 21 | 999 652 571 22 | connector<br>1.0 - 2.5 QMM | | X | |
| 22 | 999 652 918 40 | connector housing<br>6-pole<br>for longitudinal adjustment<br>and<br>height adjustment | | 2 | |
| 23 | 999 650 055 40 | pin connector socket<br>6-pole<br>lumbar support | | 2 | |
| 24 | 996 521 327 00 | cover<br>lumbar support<br>satin black | | X | |
| 25 | 996 613 955 00 | control button<br>seat adjuster<br>repair kit | 02- | 1 | M 437/438 |

| Pos | Part Number | Description | Remark | Qty | Model |
|---|---|---|---|---|---|

| Model | Year | MG | SG | Illustration | Restrictions | UPD | 18:42 | 30.07.2008 |
|---|---|---|---|---|---|---|---|---|
| 986 | 2004 | 8 | 98 | 898-00R | | 229 | | |

| Pos | Part Number | Description | Remark | Qty | Model |
|---|---|---|---|---|---|
| | | **repair kits**<br>**set of locks** | | | |
| >> | >>996 538 001 00 | set of locks | -97 | 1 | M 531,532<br>M 534 |
| >> | >>996 538 001 03 | set of locks | 98- | 1 | M 531,532 |
| >> | >>996 538 001 06 | set of locks | 03- | 1 | M 532 |
| >> | >>996 538 001 01 | set of locks | /LL -97 | 1 | M 534,535 |
| >> | >>996 538 001 04 | set of locks | /LL 98- | 1 | M 534,535 |
| >> | >>996 538 001 07 | set of locks | /LL 03- | 1 | M 534,535 |
| >> | >>996 538 001 02 | set of locks | /RL -97 | 1 | M 534,535 |
| >> | >>996 538 001 05 | set of locks | /RL 98- | 1 | M 534,535 |
| >> | >>996 538 001 08 | set of locks | /RL 03- | 1 | M 534,535 |

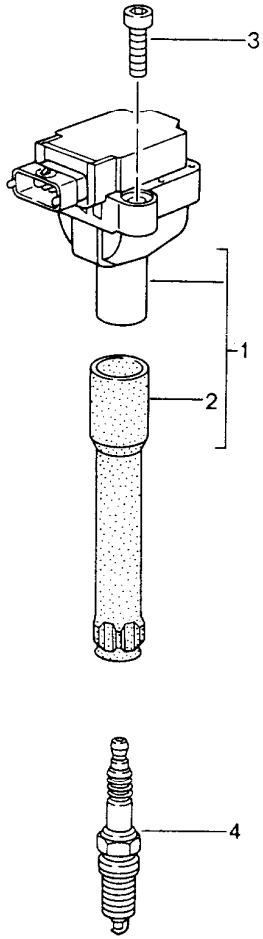


| Pos | Part Number | Description | Remark | Qty | Model |
|---|---|---|---|---|---|
| | | ignition system | | | |
| 1 | 996 602 101 01 | ignition coil | -99<br>-02<br>-02 | 6 | M 96.20<br>M 96.21<br>M 96.22 |
| - | 999 652 916 40 | connector housing | | 6 | |
| - | 999 650 052 12 | connector | | 18 | |
| - | 999 704 161 40 | gasket | | 18 | |
| - | 996 607 401 00 | rubber sleeve | | 6 | |
| 1 | 996 602 104 00 | ignition coil | 03-<br>03- | 6 | M 96.23<br>M 96.24 |
| 2 | 996 602 103 01 | spark plug connector | -99<br>-02<br>-02 | 6 | M 96.20<br>M 96.21<br>M 96.22 |
| 2 | 996 602 105 00 | spark plug connector | 03- | 6 | M 96.23<br>M 96.24 |
| 3 | 900 067 089 09 | pan-head screw<br>M 6 X 25<br>M >> 654 04059<br>M >> 674 03796 | | 12 | |
| 3 | 900 387 008 09 | torx screw<br>M 6 X 25<br>M 654 04060 >><br>M 674 03797 >> | | 12 | <br><br>M 96.23<br>M 96.24 |
| 4 | 999 170 201 90 | spark plug<br>14FR 7 LDU | -99 | 6 | M 96.20 |
| 4 | 999 170 207 91 | spark plug<br>14FGR 6KQU | -02<br>-02<br>03-<br>03- | 6 | M 96.21<br>M 96.22<br>M 96.23<br>M 96.24 |

| Model | Year | MG | SG | Illustration | Restrictions | UPD | 18:42 | 30.07.2008 | PET |
|---|---|---|---|---|---|---|---|---|---|
| 986 | 2004 | 9 | 01 | 901-03 | | 229 | | | |

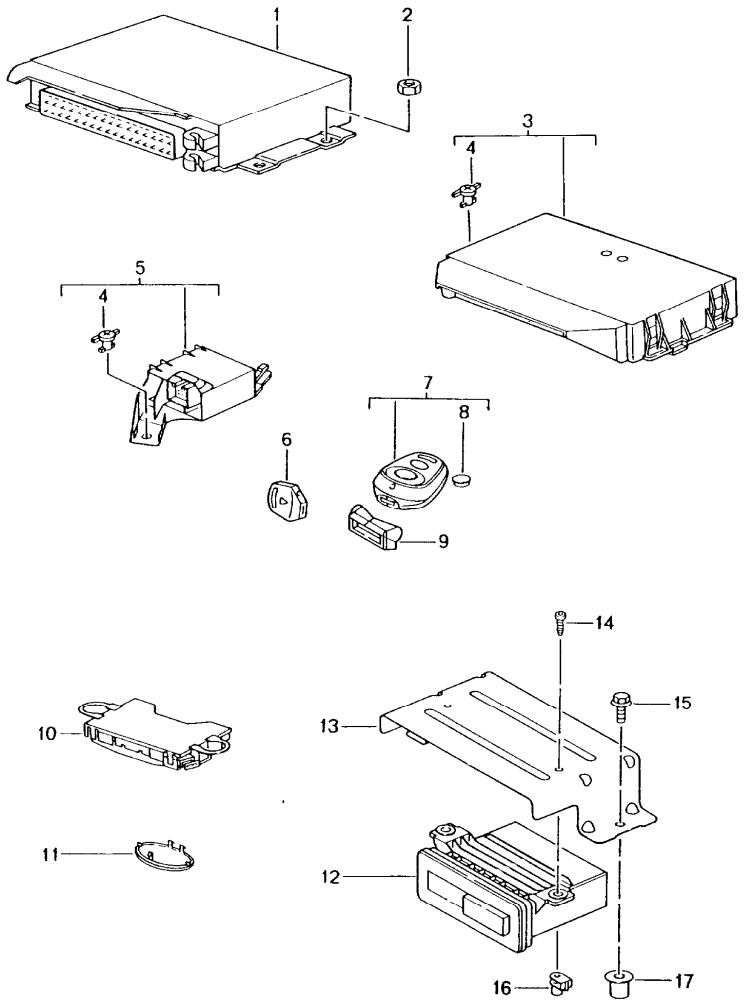


| Pos | Part Number | Description | Remark | Qty | Model |
|---|---|---|---|---|---|
| | | control units<br><br>see technical information<br>tech. information memo<br>TI-2-1A97-BOX | | | |
| 1 | 996 618 601 04 | control unit<br>- dme - | -99 | 1 | M 96.20 |
| 1 | 996 618 605 00 | control unit<br>- dme - | -02<br>-02 | 1 | M 96.21<br>M 96.22 |
| 1 | 996 618 604 00 | control unit<br>- dme -<br>see technical information<br>GR.2 NR.5/02 | 03-<br>03- | 1 | M 96.24<br>M 96.23 |
| - | 986 618 129 00 | retainer plate<br>control unit<br>- dme - | 00- | 1 | |
| (1) | 986 618 225 03 | control unit<br>tiptronic<br>F >>98XS6 00783 | 97-99 | 1 | M 249/M 009 |
| (1) | 986 618 225 04 | control unit<br>tiptronic<br>F 98XS6 00784>> | -99 | 1 | M 249/M 009 |
| (1) | 986 618 255 06 | control unit<br>tiptronic | -02 | 1 | M 249/M 009 |
| (1) | 986 618 256 00 | control unit<br>tiptronic | 03- | 1 | M 249/M 009 |
| (1) | 986 618 240 06 | control unit<br>tiptronic | -02 | 1 | M 249/M 008 |
| (1) | 986 618 241 00 | control unit<br>tiptronic | 03- | 1 | M 249/M 008 |
| 2 | 999 084 629 09 | hexagon nut<br>M 6 | | 7 | |
| (2) | 999 084 635 02 | shear-off nut<br>mount<br>control unit<br>- dme - | | 5 | M 536 |
| - | 986 618 131 00 | tab washer<br>plug-protection<br>control unit<br>- dme - | 00- | 1 | M 536 |

| Pos | Part Number | Description | Remark | Qty | Model |
|---|---|---|---|---|---|
| | | control units<br>immobiliser<br>and<br>remote control<br>see technical information<br>tech. information memo<br>TI-9-0197-BOX<br>TI-9-1A97-BOX | | | |
| 3 | 986 618 260 00 | control unit<br>immobiliser<br>central locking system | 97 | 1 | M 531 |
| 3 | 986 618 260 03 | control unit<br>immobiliser<br>central locking system | 98-00 | 1 | M 531 |
| 3 | 986 618 262 01 | control unit<br>immobiliser<br>central locking system | -02 | 1 | M 531 |
| (3) | 996 618 260 00 | control unit<br>immobiliser<br>central locking system<br>alarm system | 97 | 1 | M 534 |
| (3) | 996 618 260 06 | control unit<br>immobiliser<br>central locking system<br>alarm system | 98-00 | 1 | M 534 |
| (3) | 996 618 262 02 | control unit<br>immobiliser<br>central locking system<br>alarm system | 01-<br>03- | 1 | M 534<br>M 524 |
| - | 996 612 034 00 | cable<br>antenna<br>for<br>POS. 3 | 01- | 1 | M 534 |
| (3) | 996 618 260 01 | control unit<br>immobiliser<br>central locking system<br>alarm system | 97 | 1 | M 535 |
| (3) | 996 618 260 07 | control unit<br>immobiliser<br>central locking system<br>alarm system | 98-00 | 1 | M 535 |
| (3) | 996 618 262 03 | control unit<br>immobiliser<br>central locking system<br>alarm system | 01-<br>03- | 1 | M 535<br>M 525 |
| - | 996 612 035 00 | cable<br>antenna<br>for<br>POS. 3 | 01- | 1 | M 535 |
| - | 996 612 054 00 | connecting line<br>antenna booster<br>control unit<br>POS. 3 | 03- | 1 | M 665 |
| - | 999 607 064 00 | fuse<br>15 A<br>for<br>POS. 3 | | 1 | |
| - | 999 507 925 40 | fixing clip<br>for<br>wiring harness<br>seat<br><br>plug socket<br>for<br>POS. 3 | | 1 | |
| - | 999 650 161 40 | plug socket | | 1 | |
| - | 999 650 099 12 | connector | | X | |
| - | 999 650 097 40 | cap<br>white | | 1 | |
| - | 999 650 096 40 | cap<br>black | | 1 | M 531 |
| - | 999 650 101 40 | cap<br>white | | 1 | M 534 |
| - | 999 650 102 40 | cap<br>blue | | 1 | M 535 |
| - | 999 650 113 40 | plug socket<br>12-pole<br>black | | 1 | |
| - | N 903 353 04 | connector<br>2,5 | | X | |
| - | N 903 352 04 | connector<br>1,0 | | X | |
| 4 | 996 618 261 00 | locking device | | 1 | |
| 5 | 996 618 159 00 | signal transducer | 97 | 1 | |
| 5 | 996 618 159 01 | signal transducer | 98- | 1 | |
| 6 | 986 637 041 00 | key lamp | 97 | 1 | M 531/M 532 |

| Pos | Part Number | Description | Remark | Qty | Model |
|---|---|---|---|---|---|
| 6 | 996 637 041 00 | key lamp | 98-02<br>03- | 1 | M 531/M 532<br>M 532 |
| - | 928 537 630 02 | bulb<br>for<br>key lamp | | X | |
| 7 | 986 637 243 00 | remote control | 97 | 1 | M 534 |
| - | 986 637 247 00 | remote control<br>upper part<br>for<br>986.637.243.00 | 97 | 1 | |
| 7 | 986 637 243 03 | remote control | -00 | 1 | M 534 |
| - | 986 637 247 00 | remote control<br>upper part<br>for<br>986.637.243.03 | -00 | 1 | |
| 7 | U 986 637 244 13 | remote control | 01-03<br>03- | 1 | M 534<br>M 524 |
| 7 | 986 637 244 17 | remote control | 01-<br>03- | 1 | M 534<br>M 524 |
| - | 996 637 351 00 | remote control<br>upper part<br>for<br>986.637.244.13/17 | 01- | 1 | |
| 7 | 986 637 243 01 | remote control | 97 | 1 | (AUS) M 535 |
| - | 986 637 247 00 | remote control<br>upper part<br>for<br>986.637.243.01 | 97 | 1 | |
| 7 | 986 637 243 04 | remote control | -00 | 1 | (AUS) M 535 |
| - | 986 637 247 00 | remote control<br>upper part<br>for<br>986.637.243.04 | -00 | 1 | |
| 7 | U 986 637 244 16 | remote control | 01-03<br>03 | 1 | (AUS) M 535<br>(AUS) M 525 |
| 7 | 986 637 244 18 | remote control | 01-<br>03- | 1 | (AUS) M 535<br>(AUS) M 525 |
| - | 996 637 351 00 | remote control<br>upper part<br>for<br>986.637.244.14/16/18 | 01- | 1 | |
| 7 | 986 637 243 02 | remote control | 97 | 1 | (J) M 535 |
| - | 986 637 247 00 | remote control<br>upper part<br>for<br>986.637.243.02 | 97 | 1 | |
| 7 | 986 637 243 05 | remote control | -00 | 1 | (J) M 535 |
| - | 986 637 247 00 | remote control<br>upper part<br>for<br>986.637.243.05 | -00 | 1 | |
| 7 | U 986 637 244 15 | remote control | 01-03<br>03 | 1 | (J) M 535<br>(J) M 525 |
| 7 | 986 637 244 19 | remote control | 01-<br>03- | 1 | (J) M 535<br>(J) M 525 |
| - | 996 637 351 00 | remote control<br>upper part<br>for<br>986.637.244.15/19 | 01- | 1 | |
| - | 996 637 443 00 | crest<br>coloured<br>for<br>key lamp<br>and<br>remote control | 02- | 1 | |
| 8 | 999 611 108 00 | battery<br>see technical information<br>GR. 9 , NR. 17/03 | | 1 | |
| 9 | 996 637 344 00 | identification ring<br>key<br>1 set<br>red<br>yellow | 01- | 1 | |
| 9 | 996 637 344 01 | identification ring<br>key<br>1 set<br>blue<br>green | 01- | 1 | |
| (10) | 996 618 210 02 | sensor<br>interior monitoring | | 1 | M 534,M 535 |

| Pos | Part Number | Description | Remark | Qty | Model |
|---|---|---|---|---|---|
| (10) | 996 618 210 03 | sensor<br>interior monitoring<br>for<br>leather paint<br>can-can-red<br>flamenco red<br>plum red<br>pearl white<br>white<br>ferrari yellow<br>speed yellow<br>orchid metallic<br>magnolia | | 1 | M 534,M 535,<br>M 999 |
| - | 999 650 236 40 | plug socket | | 1 | |
| - | 999 650 256 22 | connector | | 4 | |
| (11) | 996 618 212 02 | trim cover | | 2 | |
| | | alarm siren<br>tilt sensor<br>see group<br>9 / 0 3 / 0 0 | | | M 536<br>M 536 |
| 12 | 996 618 171 01 | control unit<br>ParkAssist<br>tech. information memo<br>GR. 9 , NR. 07/98 BOX<br>F >>98XS6 00074 | 98-99 | 1 | M 635 |
| 12 | A 996 618 171 02 | control unit<br>ParkAssist<br>F 98XS6 00075>> | -03 | 1 | M 635 |
| 12 | 996 618 171 03 | control unit<br>ParkAssist<br>F 98XS6 00075>> | 99- | 1 | M 635 |
| 13 | 996 618 371 00 | support | -01 | 1 | M 635 |
| (13) | 996 618 371 01 | support | 02- | 1 | M 635 |
| 14 | 999 919 120 09 | oval-head screw<br>4,0 X 18 | | 2 | M 635 |
| 15 | 900 378 179 09 | hexagon-head bolt<br>M 6 X 16 | | 2 | M 635 |
| 16 | 999 920 015 40 | plug-in nut<br>4,0 | | 2 | M 635 |
| 17 | 999 500 078 00 | sheetmetal press nut<br>M 6 | | 2 | M 635 |

| Pos | Part Number | Description | Remark | Qty | Model |
|---|---|---|---|---|---|
| | | sensor<br>see group<br>8 / 02 / 05 | | | M 635 |

| Model | Year | MG | SG | Illustration | Restrictions | UPD | 18:42 | 30.07.2008 | PET |
|---|---|---|---|---|---|---|---|---|---|
| 986 | 2004 | 9 | 02 | 902-00 | | 229 | | | |

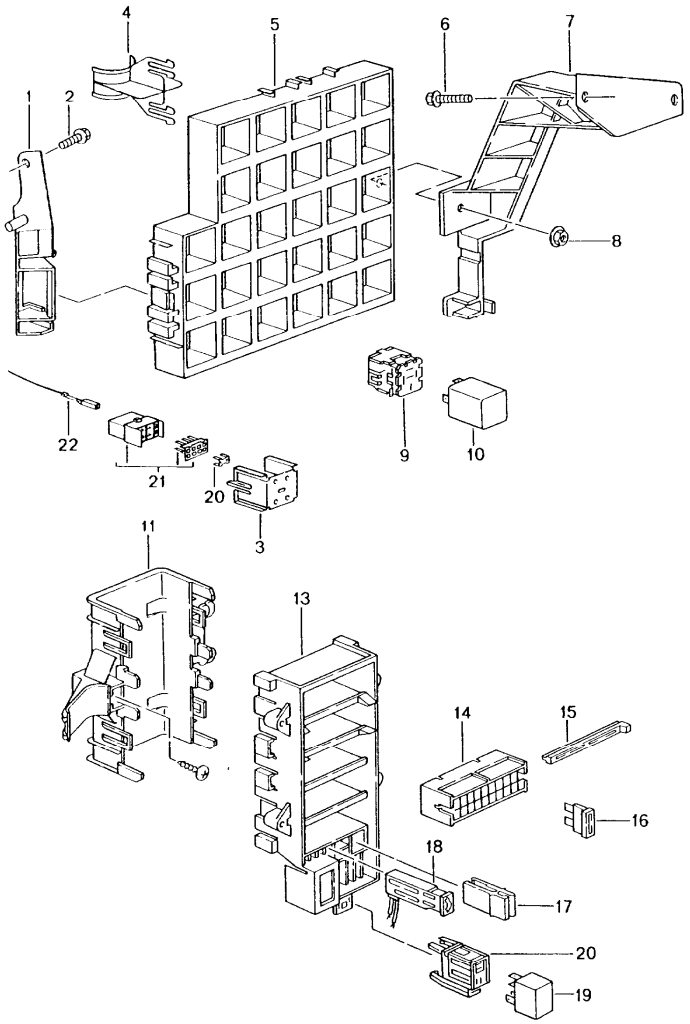


| Pos | Part Number | Description | Remark | Qty | Model |
|---|---|---|---|---|---|
| | | central electrical system<br>dashboard | | | |
| 1 | 996 610 117 00 | support | /LL/L | 1 | |
| (1) | 996 610 119 00 | support | /RL/L | 1 | |
| 2 | 900 378 155 09 | hexagon-head bolt<br>M 6 X 16 ASP | | 3 | |
| 3 | 996 610 104 00 | retaining frame | | X | |
| 4 | 996 610 112 00 | cable holder | | X | |
| 5 | 996 610 109 00 | relay carrier<br>support frame | | 1 | |
| 6 | 900 378 155 09 | hexagon-head bolt<br>M 6 X 16 ASP | | 3 | |
| 7 | 996 610 116 00 | support | /LL/R | 1 | |
| (7) | 996 610 118 00 | support | /RL/R | 1 | |
| 8 | 900 377 010 01 | hexagon nut<br>M 6 | | 1 | |
| 9 | 928 610 511 00 | relay carrier | | X | |
| 10 | - | relay | | | |
| S3 | 1H0 953 227 | flasher relay | | 1 | |
| S4 | 996 615 117 00 | control unit<br>rear window heating | | 1 | |
| S5 | 999 657 005 90 | relay | -00 | 1 | M 614/M 618 |
| S6/7 | 996 615 111 00 | relay | | 1 | M 606 |
| S8 | 996 618 113 00 | relay<br>headlight washer system | | 1 | M 288 |
| S9 | 141 951 253 B | relay<br>KL. XE | | 1 | |
| S10 | 141 951 253 B | relay<br>fanfare | | 1 | |
| S12 | 431 951 253 G | relay | -98 | 1 | ( J ) |
| S12 | 141 951 253 B | relay | 99- | 1 | ( J ) |
| S13 | 996 615 101 00 | relay<br>fuel pump | | 1 | |
| S14/ | 986 618 111 02 | control unit | -99 | 1 | M 439 |

| Pos | Part Number | Description | Remark | Qty | Model |
|---|---|---|---|---|---|
| 15 | - | convertible top control | | | |
| S14/ | 986 618 199 00 | control unit | 00- | 1 | M 439 |
| 15 | - | convertible top control | | | |
| S16 | 986 615 103 00 | interval relay | | 1 | |
| S18 | 141 951 253 B | relay<br>heating | | 1 | |
| S19 | 141 951 253 B | relay<br>radiator fan 1<br>setting 1 | | 1 | |
| S20 | 141 951 253 B | relay<br>radiator fan 1<br>setting2 | | 1 | |
| S21 | 141 951 253 B | relay<br>radiator fan 2<br>setting 1 | | 1 | |
| S22 | 141 951 253 B | relay<br>radiator fan 2<br>setting2 | | 1 | |
| 11 | 996 610 210 00 | lid | | 1 | |
| 13 | 996 610 211 01 | bracket | | 1 | |
| 14 | 999 650 209 40 | fuse holder | | X | |
| 15 | 999 650 210 40 | slide | | X | |
| 16 | 999 607 004 00 | fuse<br>5 A | | X | |
| (16) | 999 607 083 00 | fuse<br>7 , 5 A | | X | |
| (16) | A 999 607 007 00 | fuse<br>15 A | | X | |
| (16) | 999 607 085 00 | fuse<br>15 A | | X | |
| (16) | A 999 607 009 00 | fuse<br>25 A | | X | |
| (16) | 999 607 087 00 | fuse<br>25 A | | X | |
| (16) | 999 607 010 00 | fuse<br>30 A | | X | |
| 17 | 996 610 214 00 | tool | | X | |

| Pos | Part Number | Description | Remark | Qty | Model |
|---|---|---|---|---|---|
| - | 986 610 217 00 | assignment sticker<br>fuse<br>F >>98VS6 01006 | 97 | X | |
| - | 986 610 217 01 | assignment sticker<br>fuse<br>F 98VS6 01007>> | 97 | X | |
| - | 996 610 217 01 | assignment sticker<br>fuse | -99 | X | |
| - | 996 610 217 02 | assignment sticker<br>fuse | 00 | X | |
| - U | 996 610 217 03 | assignment sticker<br>fuse | 01 | X | |
| - | 996 610 217 04 | assignment sticker<br>fuse | -02 | X | |
| - | 996 610 217 05 | assignment sticker<br>fuse | 03- | X | |
| | | emergency operation<br>lid | 01- | | |
| 18 | 996 610 240 00 | terminal clamp | 01- | 1 | |
| 19 | 999 657 006 90 | relay | 01- | 1 | |
| 20 | 999 650 538 40 | plug socket<br>5-pole | 01- | 1 | |
| - | - | tip switch<br>rear spoiler<br>see group<br>9 / 03 / 05 | | | |
| - | - | cover<br>for<br>housing<br>fuse<br>see group<br>8 / 07 / 02 | | | |
| 21 | 999 650 319 22 | contact bridge<br>4-pole | | X | |
| (21) | 999 650 318 22 | contact bridge<br>8-pole | | X | |
| 22 | 999 650 317 40 | plug socket<br>8-pole | | X | |
| 23 | 999 650 320 22 | contact bush<br>2,8 / 0,75 | | X | |

| Pos | Part Number | Description | Remark | Qty | Model | Pos | Part Number | Description | Remark | Qty | Model |
|---|---|---|---|---|---|---|---|---|---|---|---|
| (23) | 999 650 321 22 | contact bush<br>2,8 / 2,5 | | X | | | | | | | |

| Model | Year | MG | SG | Illustration | Restrictions | UPD | 18:42 | 30.07.2008 | PET |
|---|---|---|---|---|---|---|---|---|---|
| 986 | 2004 | 9 | 02 | 902-01 | | 229 | | | |

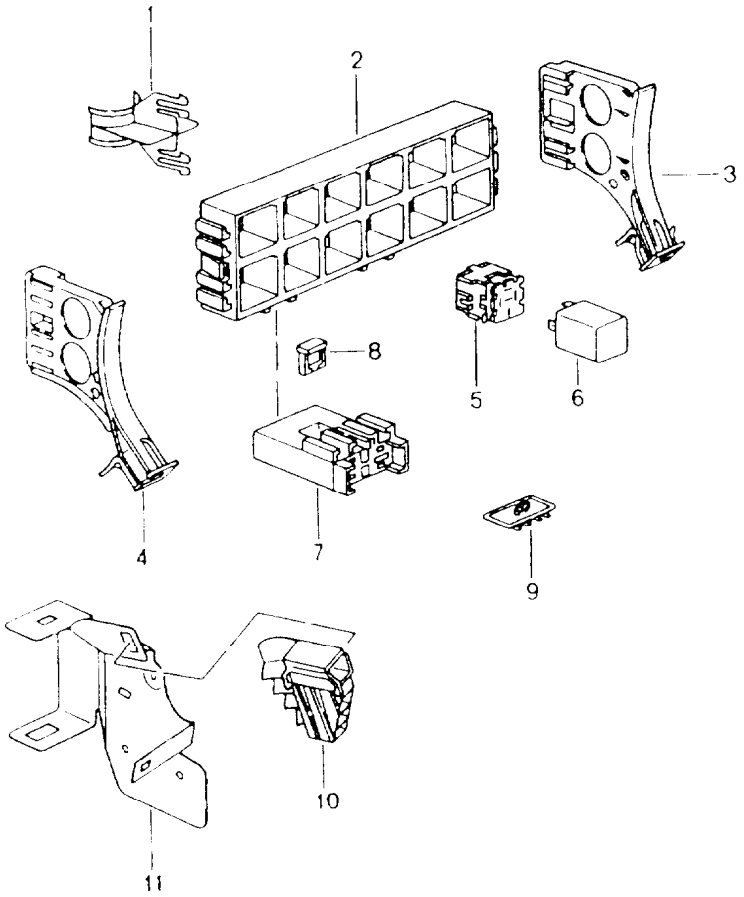


| Pos | Part Number | Description | Remark | Qty | Model |
|---|---|---|---|---|---|
| | | central electrical system<br>rear end | | | |
| 1 | 996 610 112 00 | cable holder | | X | |
| 2 | 996 610 111 00 | relay carrier<br>support frame | | 1 | |
| 3 | 986 610 126 00 | support | /R | 1 | |
| 4 | 986 610 127 00 | support | /L | 1 | |
| 5 | 928 610 511 00 | relay carrier | | X | |
| 6 | - | relay | | | |
| S1 | 141 951 253 B | relay<br>- dme - | | 1 | |
| S2 | 141 951 253 B | relay<br>ignition | | 1 | |
| S3 | 996 615 102 00 | relay<br>spoiler | | 1 | |
| S4 | 964 615 215 00 | relay<br>air conditioner | | 1 | M 573 |
| S7 | W 141 951 253 B | relay<br>starter | | 1 | |
| S7 | 996 615 110 00 | relay<br>starter | | 1 | |
| S8 | 141 951 253 B | relay<br>blower<br>engine compartment | | 1 | |
| S9 | 996 615 102 00 | relay<br>spoiler | | 1 | |
| S10 | 993 615 115 00 | relay<br>secondary pump | | 1 | M 661 |
| 7 | 999 650 193 40 | fuse holder | | 1 | M 661 |
| 8 | 999 650 371 40 | locking device | | 1 | M 661 |
| - | 999 650 194 22 | contact bush | | X | M 661 |
| - | A 999 607 011 00 | fuse<br>40 A | | 1 | M 661 |
| - | 999 607 073 00 | fuse<br>40 A | | 1 | M 661 |

| Pos | Part Number | Description | Remark | Qty | Model |
|---|---|---|---|---|---|
| - | 999 652 918 40 | connector housing<br>for<br>emission control | | 1 | |
| - | 999 652 567 22 | contact bush | | X | |
| 9 | 999 507 408 40 | fixing clip<br>for<br>connector housing<br>connection point | | X | |
| 10 | 986 610 181 00 | cable guide | | 1 | |
| (11) | 986 610 180 01 | disconnecting plug console | | 1 | |
| - | 999 084 629 09 | hexagon nut<br>VM 6 - SB<br>mount<br>disconnecting plug console | | 1 | |

| Model | Year | MG | SG | Illustration | Restrictions | UPD | 18:43 | 30.07.2008 |
|---|---|---|---|---|---|---|---|---|
| 986 | 2004 | 9 | 02 | 902-05 | | 229 | | |

PORSCHE PET PORSCHE

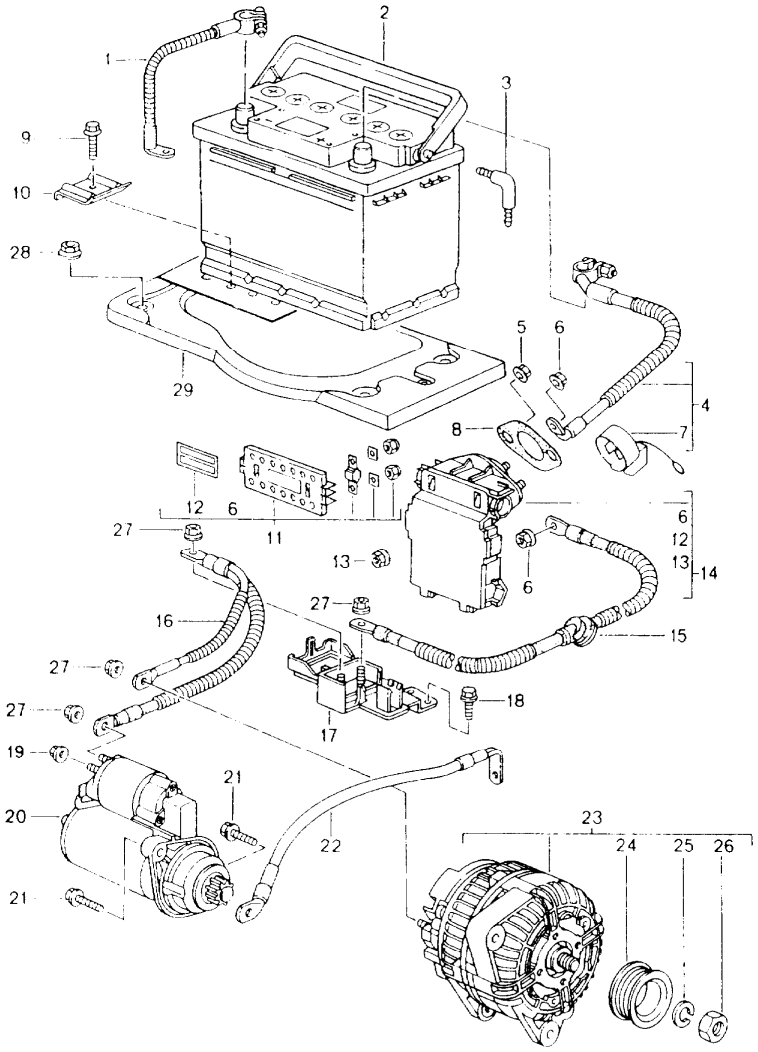


| Pos | Part Number | Description | Remark | Qty | Model |
|---|---|---|---|---|---|
| | | battery<br>power distributor<br>starter<br>generator | | | |
| 1 | A 996 611 090 08 | ground strap | /LL | 1 | |
| 1 | 997 611 090 00 | ground strap | /LL | 1 | |
| (1) | 996 611 091 05 | ground strap | /RL -03 | 1 | |
| (1) | 996 611 091 06 | ground strap | /RL 04 | 1 | |
| (2) | 999 611 070 20 | battery<br>70 AH | | 1 | |
| (2) | 999 611 080 20 | battery<br>80 AH | | 1 | M 008/M 197 |
| 3 | 893 915 507 | angled pipe | | 1 | |
| 4 | 996 612 090 09 | cable<br>battery<br>power distributor | /LL | 1 | |
| (4) | 996 612 090 10 | cable<br>battery<br>power distributor | /RL | 1 | |
| 5 | 900 380 005 09 | hexagon nut<br>M 8 | | 2 | |
| 6 | 900 084 030 02 | hexagon nut<br>M 8<br>for<br>power distributor | | 2 | |
| 7 | 996 610 309 00 | protection cap<br>terminal clamp<br>power distributor | | 1 | |
| 8 | 996 610 302 00 | flange gasket<br>for<br>power distributor | | 1 | |
| 9 | 900 378 017 01 | hexagon-head bolt<br>M 8 X 20 | | 1 | |
| 10 | 996 611 209 00 | rail | | 1 | |
| 11 | 996 610 306 00 | repair kit<br>replacement<br>fuse element<br>comprising: | | 1 | |
| - | - | fuse element<br>50 AMPERE | | 1 | |

| Pos | Part Number | Description | Remark | Qty | Model |
|---|---|---|---|---|---|
| - | - | fuse element<br>80 AMPERE | | 1 | |
| - | - | hexagon nut<br>M 5 | | 4 | |
| 6 | 900 084 030 02 | hexagon nut<br>M 8 | | 1 | |
| - | - | intermediate layer | | 4 | |
| - | - | cover<br>blue | | 1 | |
| 12 | 996 610 311 00 | seal label<br>red | | 2 | |
| 12 | 996 610 311 00 | seal label<br>red | | 2 | |
| 13 | 900 084 031 02 | hexagon nut<br>M 6<br>for<br>power distributor | | 7 | |
| 14 | 996 610 308 00 | repair kit<br>replacement<br>power distributor<br>comprising: | | 1 | |
| - | - | power distributor<br>complete | | 1 | |
| 13 | 900 084 031 02 | hexagon nut<br>M 6 | | 7 | |
| 6 | 900 084 030 02 | hexagon nut<br>M 8 | | 2 | |
| 12 | 996 610 311 00 | seal label<br>red<br>use also:<br>POS. 8 | | 2 | |
| 15 | 986 612 091 00 | cable<br>power distributor<br>connection point | 97 | 1 | |
| 15 | 986 612 091 01 | cable<br>power distributor<br>connection point | 98 | 1 | |
| (15) | 986 612 091 02 | cable<br>power distributor<br>connection point<br>F >>981S6 01371<br>F >>981U6 01926<br>F >>981S6 41226<br>F >>981U6 42148 | -01 | 1 | BOXSTER<br>BOXSTER<br>BOXSTER S<br>BOXSTER S |
| (15) | 986 612 091 03 | cable<br>power distributor<br>connection point<br>F 981S6 01372>><br>F 981U6 01927>><br>F 981S6 41227>><br>F 981U6 42149>> | /LL 01- | 1 | <br><br>BOXSTER<br>BOXSTER<br>BOXSTER S<br>BOXSTER S |
| (15) | 986 612 091 04 | cable<br>power distributor<br>connection point<br>F 981S6 01372>><br>F 981U6 01927>><br>F 981S6 41227>><br>F 981U6 42149>><br><br>when required order also: | /RL 01- | 1 | <br><br>BOXSTER<br>BOXSTER<br>BOXSTER S<br>BOXSTER S |
| - | 996 610 187 00 | cable holder<br>F 981S6 01372>><br>F 981U6 01927>><br>F 981S6 41227>><br>F 981U6 42149>> | | 1 | <br>BOXSTER<br>BOXSTER<br>BOXSTER S<br>BOXSTER S |
| - | 999 919 172 09 | hexagon-head bolt<br>7,0 X 14<br>F 981S6 01372>><br>F 981U6 01927>><br>F 981S6 41227>><br>F 981U6 42149>> | | 1 | <br><br>BOXSTER<br>BOXSTER<br>BOXSTER S<br>BOXSTER S |
| 16 | 986 607 029 00 | wiring harness<br>with<br>connection point<br>generator<br>starter | -98 | 1 | |
| (16) A | 986 607 019 01 | wiring harness<br>with<br>connection point<br>generator<br>starter<br>M >> 654 06009<br>M >> 674 06125 | 99- | 1 | |

| Pos | Part Number | Description | Remark | Qty | Model |
|---|---|---|---|---|---|
| (16) | 986 607 019 02 | wiring harness<br>with<br>connection point<br>generator<br>starter | 99- | 1 | |
| 17 | 986 611 301 00 | connection point<br>complete | -98 | 1 | |
| (17) | 986 611 201 01 | connection point<br>complete | 99- | 1 | |
| 18 | 900 378 035 01 | hexagon-head bolt<br>M 6 X 16 | | 2 | |
| 19 | 900 377 010 01 | hexagon nut<br>M 6 | | 1 | |
| 20 | > 986 604 104 00 | starter<br>1,2 KW | | 1 | |
| (20) | A 996 604 104 00 | starter<br>1,8 KW | | 1 | M 249 |
| (20) | > 996 604 103 00 | starter<br>1,7 KW | | 1 | M 249<br>M 198 |
| 21 | 900 378 101 09 | hexagon-head bolt<br>AM 10 X 35<br>M >> 654 04059<br>M >> 674 03796 | | 2 | |
| 21 | 900 385 097 09 | torx screw<br>BM 10 X 35<br>M 654 04060 >><br>M 674 03797 >> | | 2 | <br><br>M 96.23<br>M 96.24 |
| 22 | 986 607 030 00 | ground strap<br>engine<br>body | | 1 | |
| (23) | > 996 603 012 01 | generator | -99 | 1 | |
| (23) | > 996 603 012 03 | generator<br>with<br>pulley<br>without<br>free wheel lock<br>M >> 654 06009<br>M >> 674 06125 | 00- | 1 | M 249 |
| (23) | A 997 603 012 02 | generator<br>with<br>pulley<br>without<br>free wheel lock<br>M 654 06010 >><br>M 674 06126 >> | | 1 | M 249<br><br><br><br><br>M96.23<br>M96.24 |
| (23) | > 997 603 012 04 | generator<br>with<br>pulley<br>without<br>free wheel lock<br>M 654 06010 >><br>M 674 06126 >> | | 1 | M 249<br><br><br><br><br>M96.23<br>M96.24 |
| (23) | > 996 603 012 02 | generator<br>with<br>pulley<br>free wheel lock<br>M >> 654 06009<br>M >> 674 06125 | 00- | 1 | M 480/M 481 |
| (23) | A 997 603 012 03 | generator<br>with<br>pulley<br>free wheel lock<br>M 654 06010 >><br>M 674 06126 >> | | 1 | M 480/M 481<br><br><br><br>M96.23<br>M96.24 |
| (23) | > 997 603 012 05 | generator<br>with<br>pulley<br>free wheel lock<br>M 654 06010 >><br>M 674 06126 >> | | 1 | M 480/M 481<br><br><br><br>M96.23<br>M96.24 |
| - | 999 650 166 40 | plug socket | | 1 | |
| - | 999 652 694 12 | connector | | 1 | |
| - | 999 704 161 40 | gasket | | 1 | |
| - | 999 652 965 40 | gasket | | 1 | |
| 24 | 996 603 151 53 | pulley | 97 | 1 | |
| (24) | 996 603 151 55 | pulley<br>without<br>free wheel lock | 98- | 1 | |
| (24) | 996 603 152 50 | pulley<br>with<br>free wheel lock<br>use also:<br>996.603.153.50 | 00- | 1 | |

| Pos | Part Number | Description | Remark | Qty | Model |
|---|---|---|---|---|---|
| - | 996 603 153 50 | protection cap<br>for<br>pulley<br>with<br>free wheel lock | | 1 | |
| 25 | N 012 016 1 | lock ring<br>B 16 | | 1 | |
| 26 | 900 034 013 01 | hexagon nut<br>M 16 X 1,5 | | 1 | |
| | | mounting parts<br>regulator<br>generator | | | |
| - | 000 043 204 22 | oval-head screw<br>M 4 X 19<br>micro-self-locking | | 2 | |
| - | 000 043 204 23 | spring washer<br>B4 | | 2 | |
| | | mounting parts<br>generator | | | |
| - | 900 378 070 09 | hexagon-head bolt<br>M 10 X 30 | -01 | 1 | |
| - | 900 378 101 09 | hexagon-head bolt<br>AM 10 X 35<br>M >> 654 04059<br>M >> 674 03796 | 02- | 1 | |
| - | 900 385 097 09 | torx screw<br>BM 10 X 35<br>M 654 04060 >><br>M 674 03797 >> | | 1 | <br>M 96.23<br>M 96.24 |
| - | 900 378 181 09 | hexagon-head bolt<br>M 10 X 145<br>M >> 654 04059<br>M >> 674 03796 | | 1 | |
| - | 900 385 092 04 | torx screw<br>BM 10 X 145<br>M 654 04060 >><br>M 674 03797 >> | | 1 | <br>M 96.23<br>M 96.24 |
| 27 | 900 377 003 03 | hexagon nut<br>M 8 | | 4 | |
| 28 | 999 084 630 01 | hexagon nut<br>VM 8 SB | | 4 | |
| 29 | 996 504 151 00 | carrier plate for battery | | 1 | |
| - | 996 504 622 00 | gasket<br>carrier plate for battery | | 1 | |

| Model | Year | MG | SG | Illustration | Restrictions | UPD | 18:43 | 30.07.2008 | PET |
|---|---|---|---|---|---|---|---|---|---|
| 986 | 2004 | 9 | 02 | 902-10 | | 229 | | | |

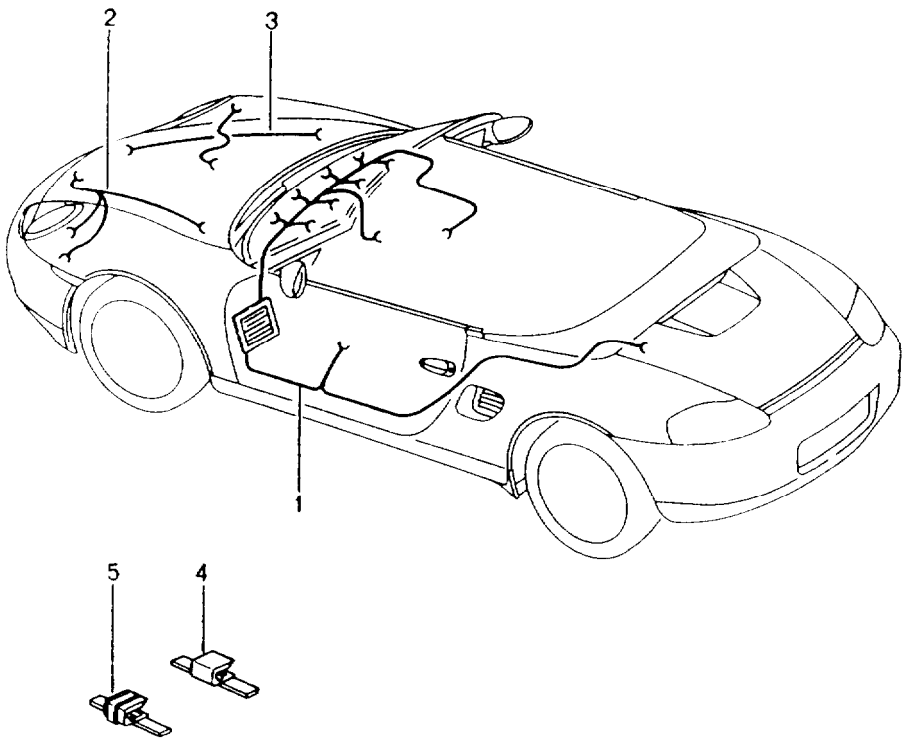


| Pos | Part Number | Description | Remark | Qty | Model |
|---|---|---|---|---|---|
| | | wiring harnesses<br>passenger compartment<br>glove compartment<br>FRONT luggage compartment<br>repair kit<br>anti-lock brake system<br>brake pad wear indicator<br>front axle | | | |
| 1 | 986 612 903 00 | wiring harness<br>passenger compartment<br>vehicle identification no.<br>indicate | | 1 | |
| - | 996 610 120 00 | support<br>plug socket<br>diagnostic connector<br><br>connection point<br>X 11 / 12 | | 1 | |
| - | 999 652 931 40 | pin connector socket | | 2 | |
| - | 999 652 570 22 | contact pin<br>2,5 - 1 | | X | |
| - | 999 652 571 22 | contact pin<br>2,5 - 2,5 | | X | |
| - | 999 652 932 40 | pin connector socket<br>10-pole<br>black | | 2 | |
| - | 999 652 923 40 | cap<br>black | | 2 | |
| - | 999 652 933 40 | pin connector socket<br>10-pole<br>white | | 2 | |
| - | 999 652 922 40 | cap<br>white | | 2 | |
| - | 999 652 921 40 | locking device<br>blue | | 4 | |
| - | 999 652 983 22 | contact pin<br>0,63 - 0,5 | | X | |
| - | 996 622 501 00 | wiring harness<br>glove compartment | 03- | 1 | |
| - | 999 650 564 40 | support<br>microswitch | 03- | 1 | |
| - | 999 650 565 40 | support<br>connector housing | 03- | 1 | |

| Pos | Part Number | Description | Remark | Qty | Model |
|---|---|---|---|---|---|
| 2 | 996 612 303 01 | wiring harness<br>FRONT luggage compartment | /L -99 | 1 | |
| 2 | 996 612 303 05 | wiring harness<br>FRONT luggage compartment | /L 00 | 1 | |
| 2 | 996 612 303 10 | wiring harness<br>FRONT luggage compartment | /L 01 | 1 | |
| 2 | 986 612 303 15 | wiring harness<br>FRONT luggage compartment | /L 02- | 1 | |
| 2 | 996 612 313 00 | wiring harness<br>FRONT luggage compartment | /L 99 | 1 | M 601 |
| 2 | 996 612 313 05 | wiring harness<br>FRONT luggage compartment | /L 00 | 1 | M 601 |
| 2 | 996 612 313 10 | wiring harness<br>FRONT luggage compartment | /L 01 | 1 | M 601 |
| 2 | 986 612 313 15 | wiring harness<br>FRONT luggage compartment | /L 02- | 1 | M 601 |
| 3 | 996 612 302 01 | wiring harness<br>FRONT luggage compartment | /R -01 | 1 | |
| 3 | 996 612 312 00 | wiring harness<br>FRONT luggage compartment | /R -01 | 1 | M 601 |
| 3 | - | wiring harness<br>FRONT luggage compartment<br>is a component of<br>wiring harness<br>passenger compartment<br><br>connection point<br>X 1/1 + X 1/2 | /R 02- | 1 | |
| - | 999 652 879 40 | plug socket<br>white | | 1 | |
| - | 928 612 566 00 | plug socket<br>black | | 1 | |
| - | 999 652 568 22 | cylindrical socket | | X | |
| - | 999 650 117 40 | fixing clip<br>for<br>plug socket | | 2 | |
| (4) | 999 507 471 40 | fixing clip | | X | |
| 5 | 999 651 302 40 | fixing clip<br>wiring harness<br>passenger compartment<br>door sill | | X | |
| (5) | 999 651 284 40 | fixing clip<br>wiring harness<br>passenger compartment<br>door sill | | X | |
| - | 999 650 323 40 | plug socket<br>diagnostic connector | | 1 | |
| - | 999 650 326 22 | contact bush<br>for<br>plug socket | | X | |
| - | - | repair kit<br>wiring harness<br>anti-lock brake system<br>brake pad wear indicator<br>front axle | | | |
| - | 996 612 951 00 | repair kit<br>wiring harness | /V/L -01 | 1 | |
| - | 996 612 951 00 | repair kit<br>wiring harness | /V/L 02- | 1 | M 476 |
| - | 996 612 960 00 | repair kit<br>wiring harness | /V/L 02- | 1 | |
| - | 996 612 952 00 | repair kit<br>wiring harness | /V/R -01 | 1 | |
| - | 996 612 952 00 | repair kit<br>wiring harness | /V/R 02- | 1 | M 476 |
| - | 996 612 961 00 | repair kit<br>wiring harness | /V/R 02- | 1 | |
| - | - | repair kit<br>wiring harness<br>rear axle<br>see group<br>9 / 02 / 20 | | | |

| Model | Year | MG | SG | Illustration | Restrictions | UPD | 18:43 | 30.07.2008 | PET |
|---|---|---|---|---|---|---|---|---|---|
| 986 | 2004 | 9 | 02 | 902-15 | | 229 | | | |

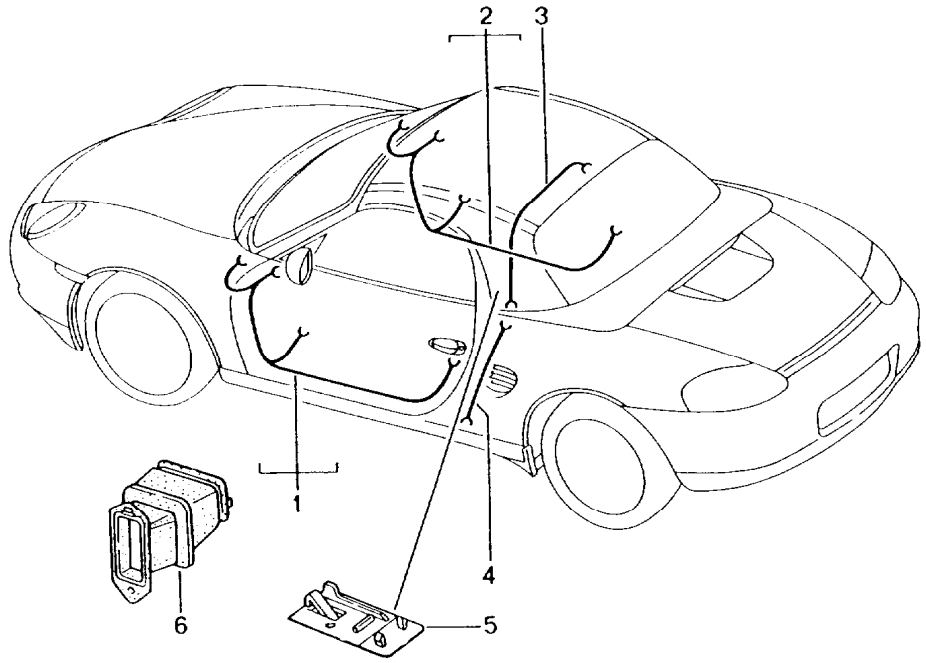


| Pos | Part Number | Description | Remark | Qty | Model |
|---|---|---|---|---|---|
| | | wiring harnesses<br>driver's door<br>passenger's door<br>hardtop | | | |
| 1 | 986 612 601 02 | wiring harness<br>driver's door<br>passenger's door<br>F >>98VS6 01525 | 97 | 2 | |
| 1 | 986 612 601 03 | wiring harness<br>driver's door<br>passenger's door<br>F 98VS6 01526>> | 97 | 2 | |
| (1) | 986 612 602 02 | wiring harness<br>driver's door<br>passenger's door<br>F >>98VS6 01525 | 97 | 2 | M 490 |
| (1) | 986 612 602 03 | wiring harness<br>driver's door<br>passenger's door<br>F 98VS6 01526>> | 97 | 2 | M 490 |
| (1) | 986 612 601 04 | wiring harness<br>driver's door<br>passenger's door | 98 | 2 | |
| (1) | 986 612 601 05 | wiring harness<br>driver's door<br>passenger's door | 99 | 2 | |
| (1) | 986 612 602 04 | wiring harness<br>driver's door<br>passenger's door | 98 | 2 | M 490 |
| (1) | 986 612 602 05 | wiring harness<br>driver's door<br>passenger's door | 99 | 2 | M 490 |
| (1) | 986 612 641 04 | wiring harness<br>driver's door<br>passenger's door | 98 | 2 | M 563 |
| (1) | 986 612 641 05 | wiring harness<br>driver's door<br>passenger's door | -00 | 2 | M 563 |
| (1) | 986 612 642 04 | wiring harness<br>driver's door<br>passenger's door | 98 | 2 | M 563/490 |
| (1) | 986 612 642 05 | wiring harness<br>driver's door<br>passenger's door | -00 | 2 | M 563/490 |

| Pos | Part Number | Description | Remark | Qty | Model |
|---|---|---|---|---|---|
| (1) | 986 612 612 02 | wiring harness<br>driver's door<br>F >>98VS6 01525 | 97 | 1 | M 273 |
| (1) | 986 612 612 03 | wiring harness<br>driver's door<br>F 98VS6 01526>> | 97 | 1 | M 273 |
| (1) | 996 612 630 02 | wiring harness<br>driver's door<br>F >>98VS6 01525 | 97 | 1 | M 273/490 |
| (1) | 996 612 630 03 | wiring harness<br>driver's door<br>F 98VS6 01526>><br>F 98VS6 20987>> | 97 | 1 | M 273/490 |
| (1) | 986 612 612 04 | wiring harness<br>driver's door | 98 | 1 | M 273 |
| (1) | 986 612 612 05 | wiring harness<br>driver's door | 99 | 1 | M 273 |
| (1) | 996 612 630 04 | wiring harness<br>driver's door | 98 | 1 | M 273/M 490 |
| (1) | 996 612 630 05 | wiring harness<br>driver's door | 99 | 1 | M 273/M 490 |
| (1) | 986 612 651 04 | wiring harness<br>driver's door | 98 | 1 | M 563/273 |
| (1) | 986 612 651 05 | wiring harness<br>driver's door | -00 | 1 | M 563/273 |
| (1) | 996 612 634 02 | wiring harness<br>driver's door | 98 | 1 | M 563/273<br>M 490 |
| (1) | 996 612 634 03 | wiring harness<br>driver's door | -00 | 1 | M 563/273<br>M 490 |
| (1) A | 996 612 634 10 | wiring harness<br>driver's door | ___01-03 | 1 | |
| (1) | 996 612 634 11 | wiring harness<br>driver's door | 01- | 1 | |
| 2 | 986 612 620 02 | wiring harness<br>passenger's door<br>F >>98VS6 01525 | 97 | 1 | M 273 |
| 2 | 986 612 620 03 | wiring harness<br>passenger's door<br>F 98VS6 01526>> | 97 | 1 | M 273 |
| 2 | 996 612 632 02 | wiring harness<br>passenger's door<br>F >>98VS6 01525 | 97 | 1 | M 273/M 490 |
| 2 | 996 612 632 03 | wiring harness<br>passenger's door<br>F 98VS6 01526>> | 97 | 1 | M 273/M 490 |
| (2) | 986 612 620 04 | wiring harness<br>passenger's door | 98 | 1 | M 273 |
| (2) | 986 612 620 05 | wiring harness<br>passenger's door | 99 | 1 | M 273 |
| (2) | 996 612 632 04 | wiring harness<br>passenger's door | 98 | 1 | M 273/M 490 |
| (2) | 996 612 632 05 | wiring harness<br>passenger's door | 99 | 1 | M 273/M 490 |
| (2) | 986 612 652 04 | wiring harness<br>passenger's door | 98 | 1 | M 563/273 |
| (2) | 986 612 652 05 | wiring harness<br>passenger's door | -00 | 1 | M 563/273 |
| (2) | 996 612 635 02 | wiring harness<br>passenger's door | 98 | 1 | M 563/273<br>M 490 |
| (2) | 996 612 635 03 | wiring harness<br>passenger's door | -00 | 1 | M 563/273<br>M 490 |
| (2) A | 996 612 635 10 | wiring harness<br>passenger's door | ___01-03 | 1 | |
| (2) | 996 612 635 11 | wiring harness<br>passenger's door | 01- | 1 | |
| | | connection point<br>X 11 / 12 | | | |
| - | 999 652 930 40 | plug socket | | 2 | |
| - | 999 652 567 22 | cylindrical socket<br>2,5 - 1 | | X | |
| - | 999 652 568 22 | cylindrical socket<br>2,5 - 2,5 | | X | |
| - | 999 652 927 40 | plug socket<br>10-pole<br>white | | 2 | |
| - | 999 652 924 40 | cap<br>white | | 2 | |

| Pos | Part Number | Description | Remark | Qty | Model |
|---|---|---|---|---|---|
| - | 999 652 928 40 | plug socket<br>10-pole<br>black | | 2 | |
| - | 999 652 925 40 | cap<br>black | | 2 | |
| - | 999 652 921 40 | locking device<br>blue | | 4 | |
| - | 999 652 901 22 | connector<br>0,63 - 0,5 | | X | |
| | | mount<br>wiring harness<br>doors | | | |
| - | 996 610 320 01 | cable guide | | 2 | M 273 |
| - | 999 703 470 40 | cable clamp | | 2 | M 273 |
| - | 999 507 627 02 | cable clamp | | 2 | |
| 3 | 986 612 081 01 | wiring harness<br>hardtop | | 1 | M 550 |
| 4 | 986 612 083 00 | wiring harness<br>adapter<br>hardtop | | 1 | |
| 5 | 986 610 333 00 | cover<br>connector<br>connection point<br>hardtop | -02 | 1 | |
| 6 | U 996 610 141 00 | rubber boot<br>a-pillar<br>F 98VS6 01526>> | /L | 1 | |
| (6) | U 996 610 142 00 | rubber boot<br>a-pillar<br>F 98VS6 01526>> | /R | 1 | |
| (6) | 996 610 141 01 | rubber boot<br>a-pillar<br>F 98WS6 00259>> | | 2 | |
| - | 996 610 144 00 | frame<br>reinforcement<br>rubber boot | | 2 | |
| | | mount<br>connection point<br>a-pillar<br>F 98WS6 00259>> | | | |

| Pos | Part Number | Description | Remark | Qty | Model |
|---|---|---|---|---|---|
| - | 999 919 123 09 | oval-head screw<br>5 X 20 | | 2 | |
| - | 999 507 649 40 | expansion rivet<br>5,0 | | 2 | |
| - | 996 610 321 00 | cable holder<br>door arrester | | 2 | |

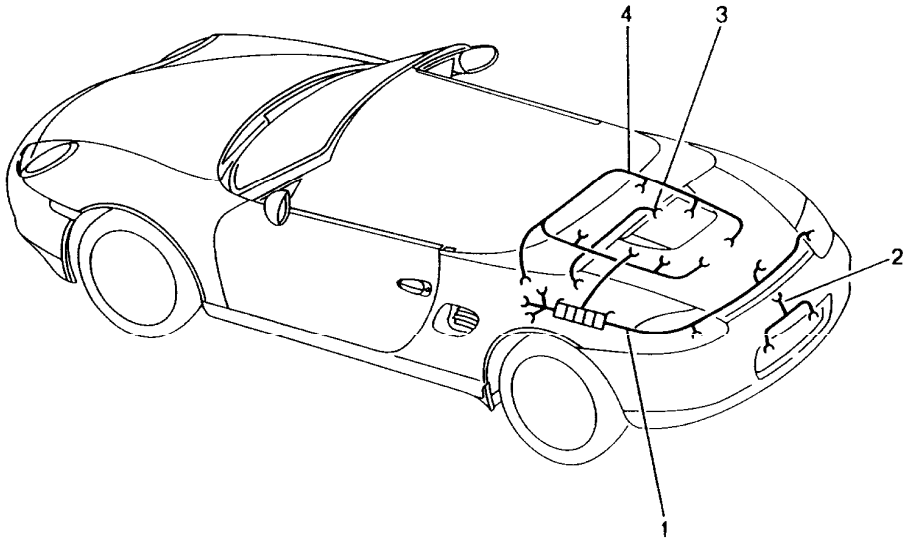


| Pos | Part Number | Description | Remark | Qty | Model |
|---|---|---|---|---|---|
| | | wiring harnesses<br>rear end<br>license plate light<br>additional brake light<br>engine<br>repair kit<br>anti-lock brake system<br>brake pad wear indicator<br>rear axle | | | |
| (1) | 986 612 056 03 | wiring harness<br>rear end | 97-98 | 1 | M 573 |
| (1) | 986 612 066 01 | wiring harness<br>rear end | 98 | 1 | M 573/M 635 |
| (1) | 986 612 905 00 | wiring harness<br>rear end<br>vehicle identification no.<br>indicate<br><br>connection point<br>X 2/1 | 99- | 1 | |
| - | 928 612 567 00 | pin connector socket<br>black | | 1 | |
| - | 999 652 570 22 | contact pin<br>2,5 - 1<br>connection point<br>X 2/2 | | X | |
| - | 999 650 041 40 | pin connector socket<br>yellow | | 1 | |
| - | 999 652 570 22 | contact pin<br>2,5 - 1<br>connection point<br>X 59 | | X | |
| - | 999 652 881 40 | pin connector socket<br>white | | 1 | |
| - | 999 652 571 22 | contact pin<br>2,5 - 2,5<br>connection point<br>X 24 | | X | |
| - | 999 652 920 40 | plug socket | | 1 | |
| - | 999 652 991 22 | contact bush<br>1,8 - 1,5 | | 2 | |
| - | 999 652 989 40 | locking device | | 1 | |
| - | 999 652 987 40 | gasket | | 2 | |

| Pos | Part Number | Description | Remark | Qty | Model |
|---|---|---|---|---|---|
| - | 999 650 013 40 | fixing clip<br>connection point<br>wiring harness<br>license plate light | | 1 | |
| - | 999 652 920 40 | plug socket | | 1 | |
| - | 999 652 991 22 | contact bush<br>1,8 - 1,5 | | 2 | |
| - | 999 652 989 40 | locking device | | 1 | |
| - | 999 652 987 40 | gasket | | 2 | |
| - | 999 650 013 40 | fixing clip<br>mount<br>wiring harness<br>rear end | | 1 | |
| - | 999 651 284 40 | fixing clip | | 6 | |
| 2 | 996 612 060 00 | wiring harness<br>license plate light | | 1 | |
| (2) | 996 612 061 00 | wiring harness<br>license plate light | -02 | 1 | M 635 |
| (2) | 996 612 063 00 | wiring harness<br>license plate light | 03- | 1 | M 635 |
| 3 | 986 612 041 00 | wiring harness<br>additional brake light | | 1 | M 602 |
| | | wiring harness<br>engine<br>M 96.20 | -99 | | |
| (4) | 986 607 002 08 | wiring harness<br>engine | -99 | 1 | M 481 |
| (4) | 986 607 002 10 | wiring harness<br>engine | -99 | 1 | M 249 |
| | | wiring harness<br>engine<br>M 96.21 | -02 | | |
| 4 | 986 607 010 05 | wiring harness<br>engine | 00 | 1 | M 480 |
| 4 | 986 607 010 07 | wiring harness<br>engine | -02 | 1 | M 480 |
| (4) | 986 607 011 07 | wiring harness<br>engine | 00 | 1 | M 249 |
| (4) | 986 607 011 09 | wiring harness<br>engine | -02 | 1 | M 249 |
| 4 | 986 607 010 06 | wiring harness<br>engine | 00 | 1 | M 660/M 480 |
| 4 | 986 607 010 08 | wiring harness<br>engine | -02 | 1 | M 660/M 480 |
| (4) | 986 607 011 08 | wiring harness<br>engine | 00 | 1 | M 660/M 249 |
| (4) | 986 607 011 10 | wiring harness<br>engine | -02 | 1 | M 660/M 249 |
| | | wiring harness<br>engine<br>M 96.22 | -02 | | |
| 4 | 986 607 020 00 | wiring harness<br>engine | 00 | 1 | M 481 |
| 4 | 986 607 020 02 | wiring harness<br>engine | -02 | 1 | M 481 |
| (4) | 986 607 021 00 | wiring harness<br>engine | 00 | 1 | M 249 |
| (4) | 986 607 021 02 | wiring harness<br>engine | -02 | 1 | M 249 |
| 4 | 986 607 020 01 | wiring harness<br>engine | 00 | 1 | M 660/M 481 |
| 4 | 986 607 020 03 | wiring harness<br>engine | -02 | 1 | M 660/M 481 |
| (4) | 986 607 021 01 | wiring harness<br>engine | 00 | 1 | M 660/M 249 |
| (4) | 986 607 021 03 | wiring harness<br>engine | -02 | 1 | M 660/M 249 |
| | | wiring harness<br>engine<br>M 96.23/24 | 03- | | |
| 4 | A 986 607 020 08 | wiring harness<br>engine | 03 | 1 | M 96.23<br>M 481 |
| 4 | 986 607 020 10 | wiring harness<br>engine | 03- | 1 | M 96.23<br>M 481 |
| 4 | A 986 607 020 09 | wiring harness<br>engine | 03 | 1 | M 96.23<br>M 481/M 660 |

| Pos | Part Number | Description | Remark | Qty | Model |
|---|---|---|---|---|---|
| 4 | 986 607 020 11 | wiring harness<br>engine | 03- | 1 | M 96.23<br>M 481/M 660 |
| 4 | A 986 607 010 13 | wiring harness<br>engine | 03 | 1 | M 96.24<br>M 480 |
| 4 | 986 607 010 15 | wiring harness<br>engine | 03- | 1 | M 96.24<br>M 480 |
| 4 | A 986 607 010 14 | wiring harness<br>engine | 03 | 1 | M 96.24<br>M 480/M 660 |
| 4 | 986 607 010 16 | wiring harness<br>engine | 03- | 1 | M 96.24<br>M 480/M 660 |
| (4) | A 986 607 011 15 | wiring harness<br>engine | 03 | 1 | M 96.23/24<br>M 249 |
| (4) | 986 607 011 17 | wiring harness<br>engine | 03- | 1 | M 96.23/24<br>M 249 |
| (4) | A 986 607 011 16 | wiring harness<br>engine | 03 | 1 | M 96.23/24<br>M 249/M 660 |
| (4) | 986 607 011 18 | wiring harness<br>engine | 03- | 1 | M 96.23/24<br>M 249/M 660 |
| | | connection point<br><br>X 3/1 | | | |
| - | 928 612 568 00 | plug socket<br>black | | 1 | |
| - | 999 652 658 12 | contact bush<br>2,5 - 2<br>connection point<br>X 3/2 | | X | |
| - | 999 650 011 40 | plug socket<br>blue | | 1 | |
| - | 999 652 567 22 | contact bush<br>2,5 - 1<br>connection point<br>X 59 | | X | |
| - | 999 652 879 40 | plug socket<br>white | | 1 | |
| - | 999 652 658 12 | contact bush<br>2,5 - 2 | | X | |

| Pos | Part Number | Description | Remark | Qty | Model |
|---|---|---|---|---|---|
| - | - | repair kit<br>wiring harness<br>anti-lock brake system<br>brake pad wear indicator<br>rear axle | | | |
| - | 986 612 953 01 | repair kit<br>wiring harness | /H/L -01 | 1 | |
| - | 986 612 953 01 | repair kit<br>wiring harness | /H/L 02- | 1 | M 476 |
| - | 986 612 960 00 | repair kit<br>wiring harness | /H/L 02- | 1 | |
| - | 986 612 954 01 | repair kit<br>wiring harness | /H/R -01 | 1 | |
| - | 986 612 954 01 | repair kit<br>wiring harness | /H/R 02- | 1 | M 476 |
| - | 986 612 961 00 | repair kit<br>wiring harness | /H/R 02- | 1 | |
| - | - | repair kit<br>wiring harness<br>front axle<br>see group<br>9 / 02 / 10 | | | |

| Model | Year | MG | SG | Illustration | Restrictions | UPD | 18:43 | 30.07.2008 |
|---|---|---|---|---|---|---|---|---|
| 986 | 2004 | 9 | 02 | 902-50 | | 229 | | |

| Pos | Part Number | Description | Remark | Qty | Model |
|---|---|---|---|---|---|
| | | optical waveguide | 03- | | |
| - | 996 622 702 00 | optical waveguide module | /LL | 1 | M 666 |
| - | 996 622 722 00 | optical waveguide module | /RL | 1 | M 666 |
| - | 996 622 704 00 | optical waveguide module | /LL | 1 | M 490/M 680 |
| - | 996 622 724 00 | optical waveguide module | /RL | 1 | M 490/M 680 |
| - | 996 622 706 00 | optical waveguide module | /LL | 1 | M 692 |
| - | 996 622 726 00 | optical waveguide module | /RL | 1 | M 692 |
| - | 996 622 716 00 | optical waveguide module | /LL | 1 | M 666/M 692 |
| - | 996 622 736 00 | optical waveguide module | /RL | 1 | M 666/M 692 |
| - | 996 622 703 00 | optical waveguide module | /LL | 1 | M 490/M 666/ M 680 |
| - | 996 622 723 00 | optical waveguide module | /RL | 1 | M 490/M 666/ M 680 |
| - | 996 622 705 00 | optical waveguide module | /LL | 1 | M 490/M 680/ M 692 |
| - | 996 622 725 00 | optical waveguide module | /RL | 1 | M 490/M 680/ M 692 |
| - | 996 622 715 00 | optical waveguide module | /LL | 1 | M 490/M 666/ M 680/M 692 |
| - | 996 622 745 00 | optical waveguide module | /RL | 1 | M 490/M 666/ M 680/M 692 |
| - | 996 610 122 00 | support connection point luggage compartment | | 1 | |
| - | 999 507 804 40 | expander nut for support | | 1 | |
| - | 996 610 132 00 | cable guide t-piece luggage compartment | | 1 | |

| Model | Year | MG | SG | Illustration | Restrictions | UPD | 18:44 | 30.07.2008 | PET |
|---|---|---|---|---|---|---|---|---|---|
| 986 | 2004 | 9 | 03 | 903-00 | | 229 | | | |

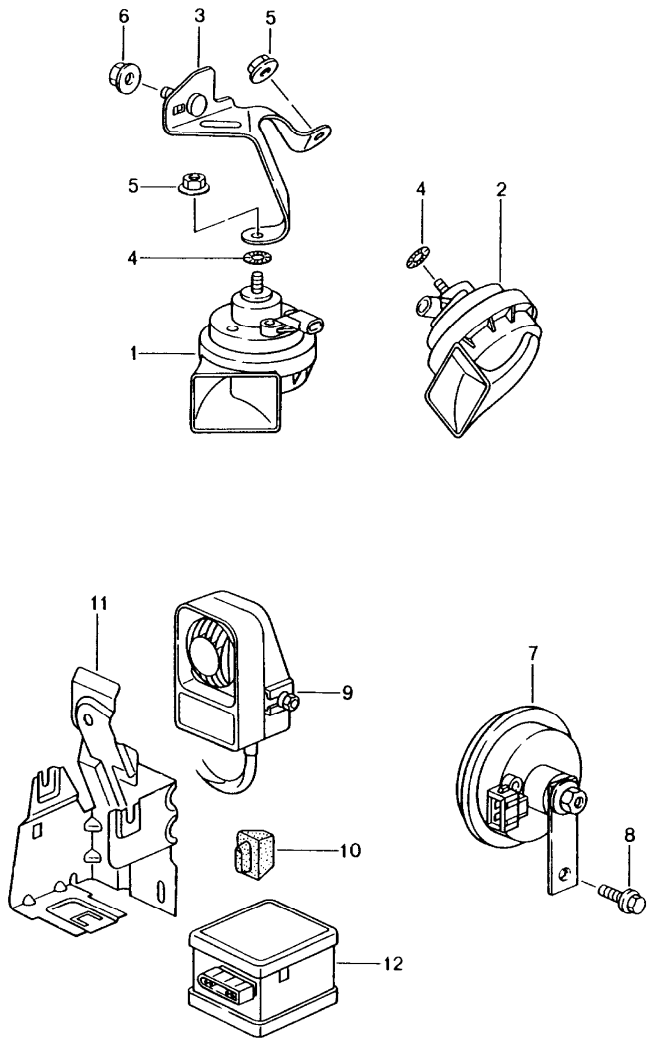


| Pos | Part Number | Description | Remark | Qty | Model |
|---|---|---|---|---|---|
| | | fanfare<br>horn<br>alarm system | | | M 536 |
| 1 | A 996 635 206 03 | fanfare<br>high-pitched | -03 | 1 | |
| 1 | 996 635 206 04 | fanfare<br>high-pitched | | 1 | |
| 2 | A 996 635 205 03 | fanfare<br>low-pitched | -03 | 1 | |
| 2 | 996 635 205 04 | fanfare<br>low-pitched | | 1 | |
| - | 999 650 490 40 | plug socket | | 2 | |
| - | 999 650 135 22 | connector | | 4 | |
| - | 999 650 126 40 | gasket | | 4 | |
| 3 | 996 635 150 00 | support | | 1 | |
| 4 | N 042 121 3 | shake-proof washer<br>A 6,4 | | 2 | |
| 5 | 900 380 015 01 | hexagon nut<br>M 6 | | 2 | |
| 6 | 900 377 003 03 | hexagon nut<br>M 8 | | 1 | |
| 7 | 996 637 117 02 | horn<br>for<br>alarm system | | 1 | |
| 8 | 900 075 459 09 | combination screw<br>M 6 X 12 Z2 | | 1 | |
| 9 | 996 618 237 04 | alarm siren | | 1 | M 536 |
| - | 999 652 946 40 | plug socket<br>3-pole | | 1 | |
| - | 999 650 126 40 | gasket | | X | |
| - | 999 650 127 40 | gasket | | X | |
| - | 999 652 934 22 | contact bush<br>0,63 - 0,5 | | X | |
| 10 | 999 703 459 40 | rubber mounting | | 1 | M 536 |
| 11 | 996 637 420 01 | support | /LL | 1 | M 536 |
| (11) | 996 637 419 01 | support | /RL | 1 | M 536 |

| Pos | Part Number | Description | Remark | Qty | Model |
|---|---|---|---|---|---|
| 12 | A 996 618 265 00 | tilt sensor<br>see technical manual<br>GR. 9 / 96 64 32<br>use also: | -01 | 1 | M 536 |
| - | 996 622 904 00 | wiring harness | | 1 | |
| - | 999 650 335 40 | plug socket<br>6-pole | -01 | 1 | M 536 |
| - | 999 652 775 22 | contact bush<br>2,5 - 1 | -01 | X | |
| - | 999 652 934 22 | contact bush<br>2,5 - 0,4 | -01 | X | |
| (12) | 996 618 265 01 | tilt sensor | 02- | 1 | M 536 |
| - | 996 637 421 00 | support<br>tilt sensor | 02- | 1 | M 536 |
| - | 900 378 179 09 | hexagon-head bolt<br>M 6 X 16 | 02- | 1 | M 536 |
| - | 999 500 078 00 | sheetmetal press nut<br>M 6 | 02- | 1 | M 536 |

| Pos | Part Number | Description | Remark | Qty | Model |
|---|---|---|---|---|---|

| Model | Year | MG | SG | Illustration | Restrictions | UPD | 18:44 | 30.07.2008 | PET |
|---|---|---|---|---|---|---|---|---|---|
| 986 | 2004 | 9 | 03 | 903-04 | | 229 | | | |

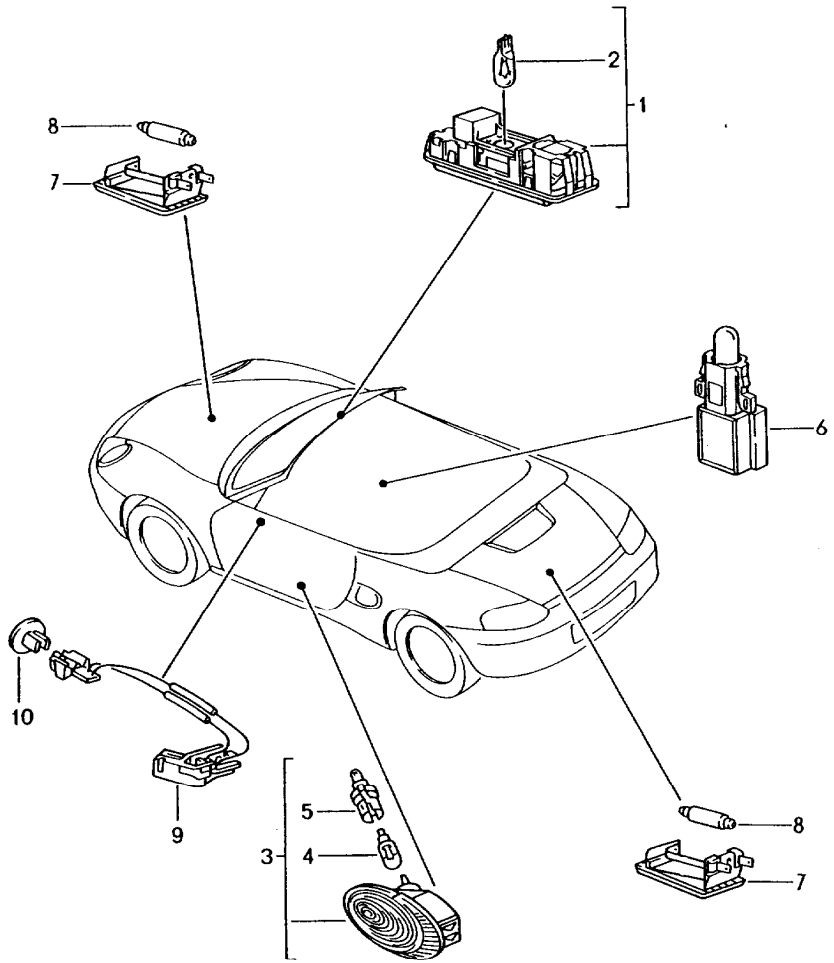


| Pos | Part Number | Description | Remark | Qty | Model |
|---|---|---|---|---|---|
| | | interior lights<br>luggage compartment lamp<br>engine compartment lamp<br>footwell light<br>combined lights<br>door opener | | | XX2 |
| 1 | 986 632 051 00 | interior light | -00 | 1 | |
| (1) | 986 632 053 00 | interior light | 01 | 1 | |
| (1) | 986 632 053 10 | interior light | 02- | 1 | |
| 1 | 986 632 051 00 | interior light | 01- | 1 | M 265 |
| 2 | 999 631 032 90 | bulb<br>5 W | | 1 | |
| - | 999 632 018 00 | bulb socket | 01- | 1 | |
| 3 | 996 632 132 01 | door guard light | | 2 | M 490 |
| 4 | 999 631 032 90 | bulb<br>5 W | | 2 | M 490 |
| 5 | 161 949 111 | bulb socket | | 2 | M 490 |
| 6 | 996 632 113 00 | ashtray light | | 1 | |
| | | luggage compartment lamp<br>engine compartment lamp<br>footwell light | | | XX2 |
| 7 | A 959 632 201 00 | light | | 2 | |
| 7 | 997 632 201 00 | light | | 2 | |
| - | 815 971 989 B | plug socket | | 2 | |
| - | N 017 490 6 | connector | | 4 | |
| 8 | 900 631 106 90 | linolite lamp<br>10 W | | 2 | |
| - | 996 632 980 00 | support<br>footwell light | | 2 | XX2 |
| 9 | 986 632 121 12 | combined lights<br>driver's door<br>door opener<br>ignition starter lock | /LL 01- | 1 | |
| (9) | 986 632 124 12 | combined lights<br>driver's door<br>door opener<br>ignition starter lock | /RL 01- | 1 | |

| Pos | Part Number | Description | Remark | Qty | Model |
|---|---|---|---|---|---|
| (9) | 996 632 122 02 | combined lights<br>passenger's door<br>door opener | /LL 01- | 1 | |
| (9) | 996 632 123 02 | combined lights<br>passenger's door<br>door opener | (RL 01- | 1 | |
| 10 | 986 632 125 00 | rosette<br>driver's door<br>combined lights<br>ignition starter lock | /LL 01- | 1 | |
| (10) | 986 632 126 00 | rosette<br>driver's door<br>combined lights<br>ignition starter lock | /RL 01- | 1 | |

| Pos | Part Number | Description | Remark | Qty | Model |
|---|---|---|---|---|---|

| Model | Year | MG | SG | Illustration | Restrictions | UPD | 18:44 | 30.07.2008 | PORSCHE PET PORSCHE |
|---|---|---|---|---|---|---|---|---|---|
| 986 | 2004 | 9 | 03 | 903-05 | | 229 | | | |

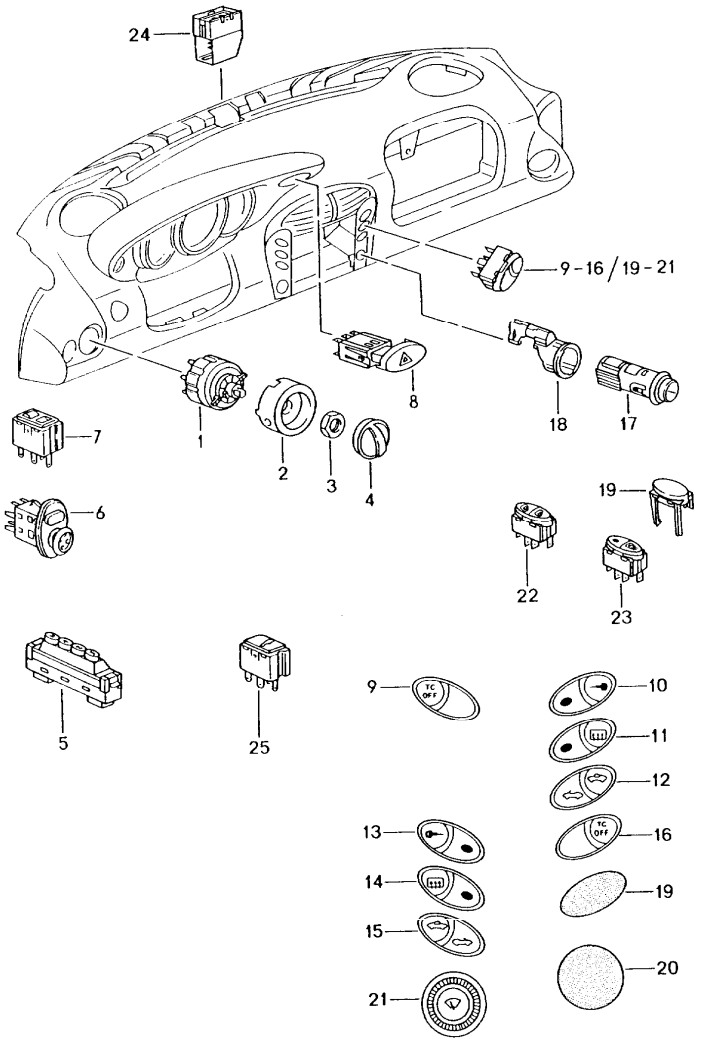


| Pos | Part Number | Description | Remark | Qty | Model |
|---|---|---|---|---|---|
| | | switch | | | |
| 1 | 996 613 535 00 | light switch | | 1 | |
| - | 999 650 346 40 | terminal sleeve housing | | 1 | |
| - | 999 650 343 40 | lid | | 1 | |
| - | 999 652 437 12 | connector<br>$ 4,0 | | X | |
| - | 999 652 351 22 | connector<br>$ 2,5 | | X | |
| 2 | 996 613 631 01 | headlight unit | /LL | 1 | |
| (2) | 996 613 632 01 | headlight unit | /RL | 1 | |
| - | 999 652 972 40 | plug socket | | 1 | |
| - | 999 652 973 40 | cap | | 1 | |
| - | 999 652 901 22 | connector | | 5 | |
| 3 | 999 034 030 09 | hexagon nut<br>M 16 X 1 | | 1 | |
| 4 | 996 613 533 01 | rotary knob | -01 | 1 | |
| | A01 | gloss black | | | |
| 4 | 996 613 533 10 | rotary knob | 02- | 1 | |
| | A05 | black mat | | | |
| 5 | 996 613 103 01 | memory switch<br>seat<br>door mirror | -01 | 1 | M 537/M 538 |
| (5) | 996 613 103 02 | memory switch<br>seat<br>door mirror | 02- | 1 | M 537/M 538 |
| 6 | 996 613 241 00 | switch | 97 | 1 | M 273 |
| | EAL | satin black/gloss black<br>door mirror | | | |
| 6 | 996 613 241 00 | switch | 98- | 1 | M 273 |
| | 01C | satin black<br>door mirror | | | |
| - | 993 612 501 00 | plug socket | | 1 | |
| - | N 903 352 04 | connector | | 5 | |

| Pos | Part Number | Description | Remark | Qty | Model |
|---|---|---|---|---|---|
| - | 999 652 790 12 | cylindrical socket | | 2 | |
| 7 | 996 613 102 00 | tip switch<br>rear spoiler | | 1 | |
| - | 999 650 035 40 | plug socket | | 1 | |
| - | 999 650 330 00 | connector | | 5 | |
| 8 | 986 613 120 01 | hazard warning light sw. | /LL -01 | 1 | |
| | A02 | gloss black | | | |
| (8) | 986 613 121 01 | hazard warning light sw. | /RL -01 | 1 | |
| | A02 | gloss black | | | |
| (8) | 986 613 120 10 | hazard warning light sw. | /LL 02- | 1 | |
| | A05 | black mat | | | |
| (8) | 986 613 121 10 | hazard warning light sw. | /RL 02- | 1 | |
| | A05 | black mat | | | |
| - | 999 650 191 40 | plug socket | | 1 | |
| - | 999 650 192 40 | locking device | | 1 | |
| - | 999 652 475 22 | connector | | 9 | |
| 9 | 986 613 141 00 | tip switch | /LL -00 | 1 | M 222 |
| | A02 | gloss black | | | |
| (9) | 986 613 145 00 | tip switch | /LL 01 | 1 | M 476 |
| | A02 | gloss black | | | |
| (9) | 986 613 145 10 | tip switch | /LL 02 | 1 | M 476 |
| | A05 | black mat | | | |
| (9) | 996 613 145 10 | tip switch | /LL 03- | 1 | M 476 |
| | A05 | black mat | | | |
| - | 999 650 107 40 | plug socket | | 1 | |
| - | 999 650 103 12 | connector | | 5 | |
| 10 | 986 613 144 00 | tip switch | /LL -01 | 1 | |
| | A02 | gloss black<br>central locking system | | | |
| 10 | 986 613 144 10 | tip switch | /LL 02 | 1 | |
| | A05 | black mat<br>central locking system | | | |
| (10) | 996 613 144 10 | tip switch | /LL 03- | 1 | |
| | A05 | black mat<br>central locking system | | | |
| - | 999 650 107 40 | plug socket | | 1 | |
| - | 999 650 330 00 | connector | | 5 | |
| 11 | 986 613 134 00 | tip switch | /LL -01 | 1 | |
| | A02 | gloss black<br>heating<br>rear window<br>door mirror | | | M 550<br>M 273 |
| 11 | 986 613 134 10 | tip switch | /LL 02 | 1 | |
| | A05 | black mat<br>heating<br>rear window<br>door mirror | | | M 550<br>M 273 |
| (11) | 996 613 134 10 | tip switch | /LL 03- | 1 | |
| | A05 | black mat<br>heating<br>rear window<br>door mirror | | | |
| - | 999 650 110 40 | plug socket | | 1 | |
| - | 999 650 103 12 | connector | | 5 | |
| 12 | 986 613 138 00 | tip switch | /LL -01 | 1 | |
| | A02 | gloss black<br>convertible top control | | | |
| 12 | 986 613 138 10 | tip switch | /LL 02 | 1 | |
| | A05 | black mat<br>convertible top control | | | |
| (12) | 996 613 138 10 | tip switch | /LL 03- | 1 | |
| | A05 | black mat<br>convertible top control | | | |
| - | 999 650 111 40 | plug socket | | 1 | |
| - | 999 650 330 00 | connector | | 5 | |
| 13 | 986 613 143 00 | tip switch | /RL 01 | 1 | |

| Pos | Part Number | Description | Remark | Qty | Model |
|---|---|---|---|---|---|
| | A02 | gloss black<br>central locking system | | | |
| 13 | 986 613 143 10 | tip switch | /RL 02 | 1 | |
| | A05 | black mat<br>central locking system | | | |
| (13) | 996 613 143 10 | tip switch | /RL 03- | 1 | |
| | A05 | black mat<br>central locking system | | | |
| - | 999 650 107 40 | plug socket | | 1 | |
| - | 999 650 330 00 | connector | | 5 | |
| 14 | 986 613 133 00 | tip switch | /RL -01 | 1 | |
| | A02 | gloss black<br>heating<br>rear window<br>door mirror | | | M 550<br>M 273 |
| 14 | 986 613 133 10 | tip switch | /RL 02 | 1 | |
| | A05 | black mat<br>heating<br>rear window<br>door mirror | | | M 550<br>M 273 |
| (14) | 996 613 133 10 | tip switch | /RL 03- | 1 | |
| | A05 | black mat<br>heating<br>rear window<br>door mirror | | | |
| - | 999 650 110 40 | plug socket | | 1 | |
| - | 999 650 103 12 | connector | | 5 | |
| 15 | 986 613 137 00 | tip switch | /RL -01 | 1 | |
| | A02 | gloss black<br>convertible top control | | | |
| 15 | 986 613 137 10 | tip switch | /RL 02 | 1 | |
| | A05 | black mat<br>convertible top control | | | |
| (15) | 996 613 137 10 | tip switch | /RL 03- | 1 | |
| | A05 | black mat<br>convertible top control | | | |
| - | 999 650 111 40 | plug socket | | 1 | |
| - | 999 650 330 00 | connector | | 5 | |
| 16 | 986 613 142 00 | tip switch | /RL -00 | 1 | M 222 |
| | A02 | gloss black | | | |
| (16) | 986 613 146 00 | tip switch | /RL 01 | 1 | M 476 |
| | A02 | gloss black | | | |
| (16) | 986 613 146 10 | tip switch | /RL 02 | 1 | M 476 |
| | A05 | black mat | | | |
| (16) | 996 613 146 10 | tip switch | /RL 03- | 1 | M 476 |
| | A05 | black mat | | | |
| - | 999 650 107 40 | plug socket | | 1 | |
| - | 999 650 103 12 | connector | | 5 | |
| 17 | 996 652 101 00 | cigarette lighter | -01 | 1 | |
| 17 | 996 652 101 10 | cigarette lighter | 02- | 1 | |
| | A05 | black mat | | | |
| - | 999 650 284 40 | plug socket | | 1 | |
| - | 999 652 735 12 | connector | | 3 | |
| (17) | 996 652 103 00 | plug socket | | 1 | M 580 |
| | A01 | gloss black | | | |
| 18 | 996 652 102 01 | headlight unit | -01 | 1 | |
| 18 | 996 652 102 10 | headlight unit | 02- | 1 | |
| (18) | 996 652 104 00 | tensioning sleeve | | 1 | M 580 |
| 19 | 996 552 425 00 | cover | -99 | X | |
| | A01 | gloss black | | | |
| (19) | 986 613 425 00 | cover | -01 | X | |
| | A01 | gloss black<br>switch<br>display specimen | | | |
| (19) | 996 613 425 10 | cover | 02- | X | |

| Pos | Part Number | Description | Remark | Qty | Model |
|---|---|---|---|---|---|
| | A05 | black mat<br>switch<br>display specimen | | | |
| (19) | 996 613 980 06 | tip switch | 02- | 1 | XX2 |
| | A05 | black mat<br>footwell light | | | |
| 20 | 986 552 543 00 | cover | 97- | X | |
| | B12 | black-grey | | | |
| 20 | 986 552 543 01 | cover | 98- | X | |
| | D05 | granite grey | | | |
| | C02 | metal grey | | | |
| | A03 | black | 00- | | |
| (20) | 986 552 983 05 | cover<br>arctic silver | 01 | X | XKW |
| 21 | 996 613 115 00 | potentiometer | -01 | 1 | M 008 |
| | A02 | gloss black<br>wipe interval | | | |
| 21 | 996 613 115 10 | potentiometer | 02- | 1 | M 008 |
| | A05 | black mat<br>wipe interval | | | |
| (21) | 996 613 127 00 | potentiometer | 01 | 1 | M 265 |
| | A02 | gloss black<br>wipe interval | | | |
| (21) | 996 613 127 10 | potentiometer | 02- | 1 | M 265 |
| | A05 | black mat<br>wipe interval | | | |
| 22 | 996 613 151 00 | tip switch | -01 | 2 | |
| | A02 | gloss black<br>power windows | | | |
| 22 | 996 613 151 10 | tip switch | 02- | 2 | |
| | A05 | black mat<br>power windows | | | |
| - | 999 650 109 40 | plug socket | /L | 1 | |
| - | 999 650 330 00 | connector | /L | 5 | |

| Pos | Part Number | Description | Remark | Qty | Model |
|---|---|---|---|---|---|
| - | 999 650 035 40 | plug socket | /R | 1 | |
| - | 999 650 330 00 | connector | /R | 5 | |
| 23 | 986 613 152 00 | tip switch | -01 | 2 | M 139,M 340 |
| | A02 | gloss black<br>seat heater | | | |
| (23) | 986 613 152 10 | tip switch | 02 | 2 | M 139,M 340, |
| | A05 | black mat<br>seat heater | 03- | | M 342 |
| - | 999 650 109 40 | plug socket | /L | 1 | |
| - | 999 650 330 00 | connector | /L | 5 | |
| - | 999 650 035 40 | plug socket | /R | 1 | |
| - | 999 650 330 00 | connector | /R | 5 | |
| 24 | 996 637 137 00 | light<br>alarm system | | 1 | M 534,M 535 |
| - | 999 650 053 40 | plug socket | | 1 | |
| - | N 903 352 04 | connector<br>F >>98VS6 04498 | | 2 | |
| 24 | 996 653 251 00 | light<br>alarm system<br>with<br>sensor | | 1 | M 534,M 535,<br>M 573 |
| - | 999 650 221 40 | plug socket<br>F 98VS6 04499>> | | 1 | |
| 25 | 996 613 105 10 | tip switch | 01- | 1 | |
| | A05 | black mat<br>lid<br>front | | | |
| (25) | 996 613 106 10 | tip switch | 01- | 1 | |
| | A05 | black mat<br>lid<br>rear | | | |

| Model | Year | MG | SG | Illustration | Restrictions | UPD | 18:44 | 30.07.2008 | PET |
|---|---|---|---|---|---|---|---|---|---|
| 986 | 2004 | 9 | 03 | 903-10 | | 229 | | | |

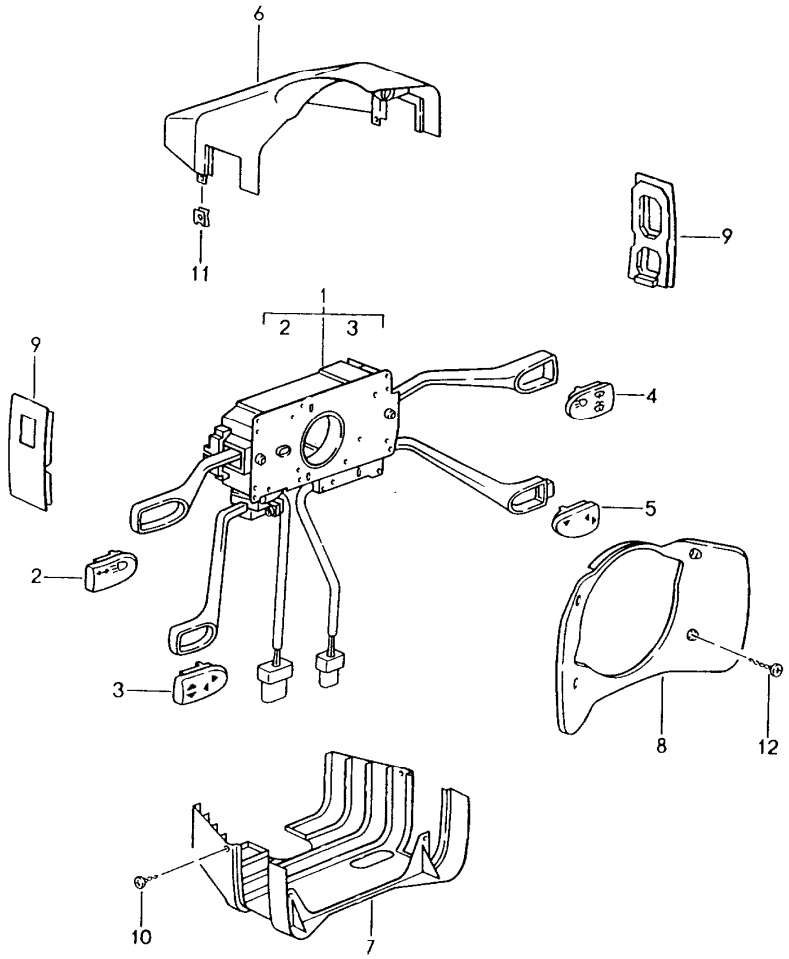


| Pos | Part Number | Description | Remark | Qty | Model |
|---|---|---|---|---|---|
| | | steering column switch | | | |
| 1 | 996 613 219 10 | steering column switch | | 1 | M 454/659 |
| | EWC | black mat/satin black | | | |
| 1 | 996 613 217 10 | steering column switch | | 1 | M 454 |
| | EWC | black mat/satin black | | | |
| 1 | 996 613 215 10 | steering column switch | | 1 | M 659 |
| | EWC | black mat/satin black | | | |
| 1 | 996 613 213 10 | steering column switch | | 1 | |
| | EWC | black mat/satin black | | | |
| - | 999 652 640 40 | plug socket | /L | 1 | |
| - | 999 652 639 22 | contact bush | /L | X | |
| - | 999 652 641 40 | plug socket | /R | 1 | |
| - | 999 652 639 22 | contact bush | /R | X | |
| - | 999 650 056 40 | plug socket | | 1 | M 659 |
| - | 999 650 057 40 | cap | | 1 | M 659 |
| - | 999 652 901 22 | contact bush | | X | M 659 |
| - | 999 652 972 40 | plug socket | | 1 | M 454 |
| - | 999 652 973 40 | cap | | 1 | M 454 |
| - | 999 652 901 22 | contact bush | | X | M 454 |
| | | when required order also: | | | |
| 2 | 996 613 509 00 | cap with symbol | -01 | 1 | |
| | A01 | gloss black<br>direction indicator light<br>high beam | | | |
| 2 | 996 613 509 10 | cap with symbol | 02- | 1 | |
| | A05 | black mat<br>direction indicator light<br>high beam | | | |
| 3 | 996 613 503 01 | cap with symbol | -01 | 1 | M 659 |
| | A01 | gloss black | | | |
| 3 | 996 613 503 10 | cap with symbol | 02- | 1 | M 659 |

| Pos | Part Number | Description | Remark | Qty | Model |
|---|---|---|---|---|---|
| | A05 | black mat | | | |
| 4 | 996 613 507 00 | cap with symbol | -01 | 1 | M 288 |
| | A01 | gloss black | | | |
| 4 | 996 613 507 10 | cap with symbol | 02- | 1 | M 288 |
| | A05 | black mat | | | |
| (4) | 996 613 508 00 | cap with symbol | -01 | 1 | |
| | A01 | gloss black | | | |
| (4) | 996 613 508 10 | cap with symbol | 02- | 1 | |
| | A05 | black mat | | | |
| 5 | 996 613 504 00 | cap with symbol | -01 | 1 | M 454 |
| | A01 | gloss black<br>german | | | |
| 5 | 996 613 504 10 | cap with symbol | 02- | 1 | M 454 |
| | A05 | black mat<br>german | | | |
| (5) | 996 613 505 00 | cap with symbol | -01 | 1 | M 454 |
| | A01 | gloss black<br>english | | | |
| (5) | 996 613 505 10 | cap with symbol | 02- | 1 | M 454 |
| | A05 | black mat<br>english | | | |
| (5) | 996 613 506 00 | cap with symbol | -01 | 1 | M 454 |
| | A01 | gloss black<br>french | | | |
| (5) | 996 613 506 10 | cap with symbol | 02- | 1 | M 454 |
| | A05 | black mat<br>french | | | |
| 6 | 996 552 273 00 | switch housing | -99 | 1 | |
| | 01C | satin black | | | |
| (6) | 996 552 273 01 | switch housing | 00- | 1 | |
| | A03 | black<br>lacquered | | | |
| 7 | 996 552 275 00 | switch housing | -98 | 1 | |
| | 01C | satin black | | | |
| 7 | 996 552 275 02 | switch housing | 99 | 1 | |
| | 01C | satin black | | | |
| (7) | 996 552 275 03 | switch housing | 00- | 1 | |
| | A03 | black<br>lacquered | | | |
| - | 996 610 206 00 | support<br>for<br>connector housing | | 1 | |
| 8 | 993 552 277 00 | cover | -99 | 1 | |
| | 01C | satin black | | | |
| (8) | 996 552 277 00 | cover | 00- | 1 | |
| | A03 | black<br>lacquered | | | |
| 9 | 993 552 573 00 | cover | | X | |
| | 01C | satin black | | | |
| | | | | 1 | M 454 |
| | | | | 1 | M 659 |
| (9) | 993 552 573 01 | cover | | X | |
| | 01C | satin black | | | |
| | | | | | M 454/659 |
| | | | | | M 454 |
| | | | | | M 659 |
| 10 | 900 143 002 07 | tapping screw<br>B 2,9 X 9,5 | | 2 | |
| 11 | 999 591 888 02 | speed nut<br>B 2,9 | | 2 | |
| 12 | 900 143 072 02 | oval-head sheetmetal screw<br>B 3,5 X 19 | | 4 | |

| Model | Year | MG | SG | Illustration | Restrictions | UPD | 18:45 | 30.07.2008 |
|---|---|---|---|---|---|---|---|---|
| 986 | 2004 | 9 | 04 | 904-00 | | 229 | | |

PORSCHE PET PORSCHE

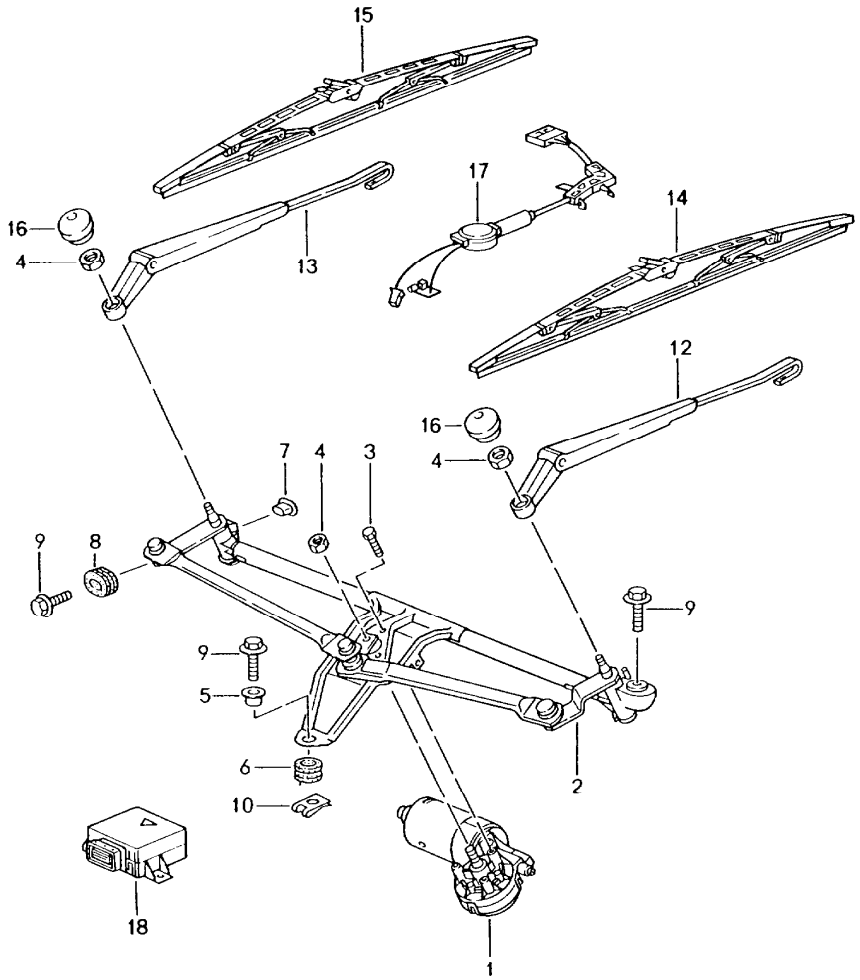


| Pos | Part Number | Description | Remark | Qty | Model |
|---|---|---|---|---|---|
| | | windscreen wiper system<br>rain sensor | | | M 265 |
| 1 | 997 624 105 00 | wiper motor | /LL | 1 | |
| (1) | 997 624 106 00 | wiper motor | /RL | 1 | |
| 2 | 997 628 235 00 | crank drive | /LL | 1 | |
| (2) | 997 628 236 00 | crank drive | /RL | 1 | |
| 3 | 900 075 014 02 | hexagon-head bolt<br>M 6 X 18 | | 3 | |
| 4 | 900 076 064 01 | hexagon nut<br>M 8 | | 3 | |
| 5 | 999 924 102 02 | bearing sleeve | | 1 | |
| 6 | 999 702 204 50 | rubber bush | | 1 | |
| 7 | 996 628 713 00 | bearing sleeve | | 1 | |
| 8 | 996 628 703 00 | rubber bush | | 1 | |
| 9 | 999 075 075 09 | combination screw<br>M 6 X 22 SC | | 3 | |
| 10 | 999 507 246 02 | speed nut<br>M 6 | | 1 | |
| 12 | 986 628 028 00 | wiper arm<br>driver's side | /LL | 1 | |
| (12) | 996 628 027 01 | wiper arm<br>passenger's side | /RL | 1 | |
| 13 | 996 628 028 01 | wiper arm<br>passenger's side | /LL | 1 | |
| (13) | 986 628 027 00 | wiper arm<br>driver's side | /RL | 1 | |
| (14) | 996 628 901 08 | wiper blade<br>see technical information<br>GR. 9 , NR. 1/03<br>set<br>driver's side<br>passenger's side | /LL | 1 | |
| (15) | 996 628 901 08 | wiper blade<br>see technical information<br>GR. 9 , NR. 1/03<br>set<br>driver's side<br>passenger's side | /RL | 1 | |

| Pos | Part Number | Description | Remark | Qty | Model |
|---|---|---|---|---|---|
| 16 | 944 628 305 01 | cap | | 2 | |
| 17 | 986 612 506 00 | rain sensor<br>with<br>wiring harness | | 1 | M 265 |
| - | 000 043 204 65 | adhesive film<br>for<br>rain sensor<br>see technical manual<br>GR. 9 / 92 12 19 | | 1 | M 265 |
| 18 | 996 615 113 00 | control unit<br>rain sensor | | 1 | M 265 |

| Model | Year | MG | SG | Illustration | Restrictions | UPD | 18:45 | 30.07.2008 | PET |
|---|---|---|---|---|---|---|---|---|---|
| 986 | 2004 | 9 | 04 | 904-10 | | 229 | | | |

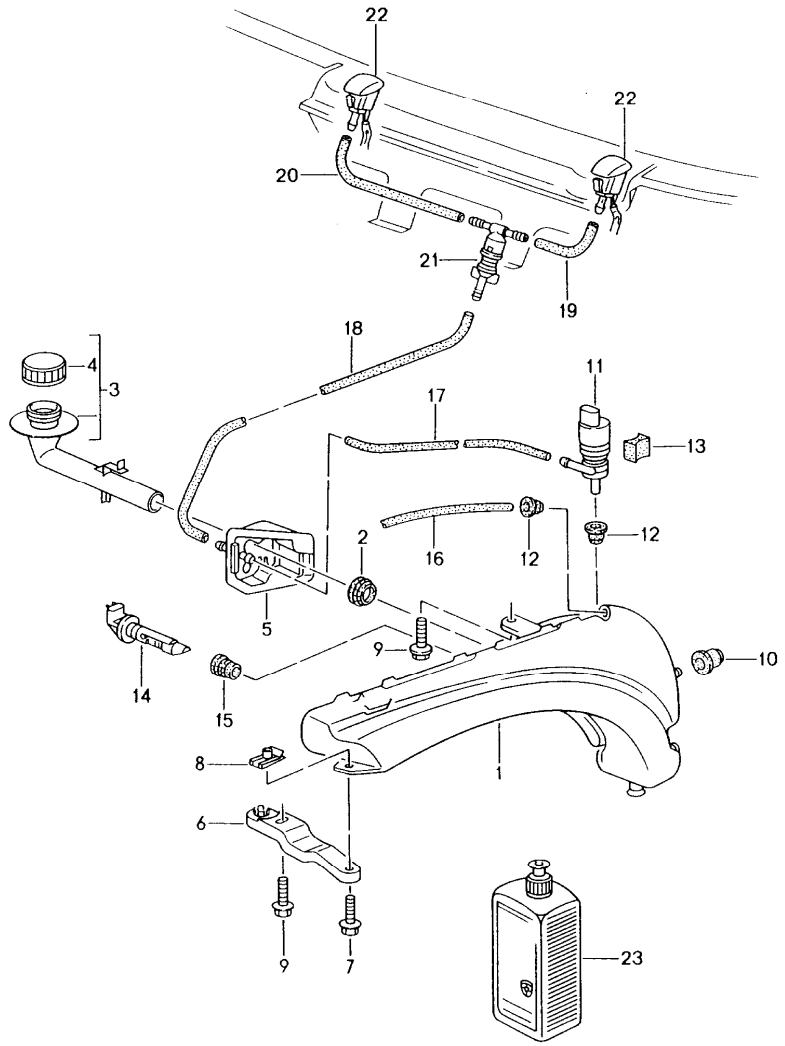


| Pos | Part Number | Description | Remark | Qty | Model |
|---|---|---|---|---|---|
| | | windscreen washer system | | | |
| 1 | 996 528 701 00 | water reservoir | | 1 | M 288 |
| (1) | 996 528 701 01 | water reservoir | | 1 | |
| 2 | 996 528 711 00 | gasket | | 1 | |
| 3 | 996 528 605 00 | filler neck | | 1 | |
| 4 | 996 528 607 00 | lid | | 1 | |
| 5 | 996 528 615 01 | bracket | | 1 | |
| - | 999 137 091 40 | joining socket<br>repair material<br>for<br>bracket<br>996.528.615.00/01 | | X | |
| (6) | 996 528 611 02 | support | | 1 | M 288 |
| 7 | 900 378 030 09 | hexagon-head bolt<br>M 6 X 20 | | 1 | M 288 |
| 8 | 999 591 882 02 | speed nut<br>M 6 | | 1 | M 288 |
| 9 | 900 378 154 01 | hexagon-head bolt<br>AM 8 X 35 SB | | 1<br>2 | M 288 |
| 10 | 999 702 221 40 | grommet | | 2 | |
| 11 | 996 628 172 00 | pump | | 1 | |
| 12 | 431 955 465 B | gasket | | 2 | |
| 13 | 993 628 213 00 | spacer | | 1 | M 288 |
| 14 | 996 628 105 00 | tank gauge switch | | 1 | |
| 15 | 996 528 721 00 | gasket | | 1 | |
| 16 | 999 181 347 40 | breather pipe<br>245 MM<br>640 MM | | *<br><br> | <br><br>M 288 |
| - | 999 181 815 40 | hose<br>5,0 X 2,5 | | * | |
| 17 | - | 400 MM | | 1 | |
| 18 | - | 560 MM | | 1 | |
| 19 | - | 80 MM | | 1 | |
| 20 | - | 380 MM | | 1 | |

| Pos | Part Number | Description | Remark | Qty | Model |
|---|---|---|---|---|---|
| 21 | 996 628 102 00 | t-piece | | 1 | |
| 22 | A 996 628 077 00 | nozzle<br>adjustable | 97-98 | 2 | |
| (22) | A 996 628 077 01 | nozzle<br>not<br>adjustable | 99- | 2 | |
| (22) | 996 628 077 03 | nozzle<br>not<br>adjustable | 99- | 2 | |
| | | when required order also: | | | |
| - | 997 612 976 00 | repair kit<br>wiring harness | | 2 | |
| 23 | 999 901 017 41 | window cleaner<br>250 ML<br>summer | | X | |
| 23 | 999 901 033 40 | window cleaner<br>1000 ML<br>winter | | X | |

| Model | Year | MG | SG | Illustration | Restrictions | UPD | 18:45 | 30.07.2008 | PET |
|---|---|---|---|---|---|---|---|---|---|
| 986 | 2004 | 9 | 04 | 904-20 | | 229 | | | |

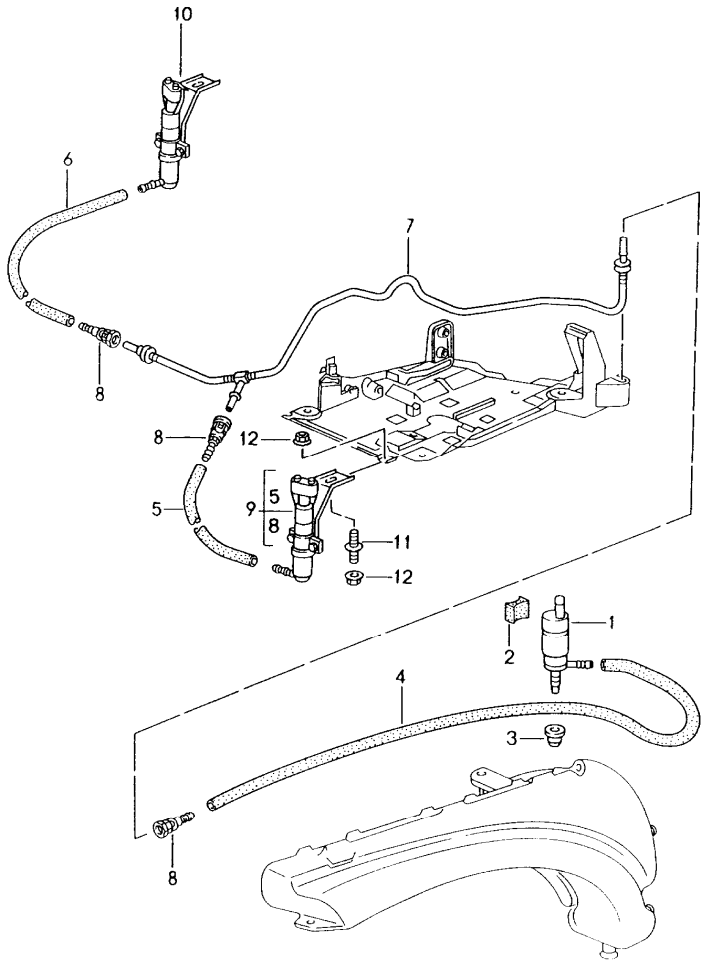


| Pos | Part Number | Description | Remark | Qty | Model |
|---|---|---|---|---|---|
| | | headlight washer system | | | M 288 |
| 1 | 996 624 502 00 | pump | | 1 | |
| 2 | 993 628 213 00 | spacer | | 1 | |
| 3 | 928 628 193 00 | gasket<br>without<br>strainer | | 1 | |
| (3) | 996 628 393 00 | gasket<br>with<br>strainer | | 1 | |
| - | 000 043 204 79 | hose<br>8 X 3 | | * | |
| 4 | - | 1020 MM | | 1 | |
| 5 | - | 170 MM | | 1 | |
| 6 | - | 930 MM | | 1 | |
| - | 999 512 673 00 | hose clamp<br>for<br>POS. 1 + 8 | | X | |
| - | 999 512 568 02 | hose clamp<br>for<br>POS. 5 + 6 | | X | |
| 7 | 996 628 673 00 | line | | 1 | |
| 8 | 996 628 675 00 | quick-connecting lock | | 3 | |
| 9 | 996 628 333 00 | nozzle | /L | 1 | |
| 10 | 996 628 334 00 | nozzle | /R | 1 | |
| 11 | 996 628 335 00 | threaded bolt | | 2 | |
| 12 | 999 076 064 02 | hexagon nut<br>M 6-S | | 4 | |

| Model | Year | MG | SG | Illustration | Restrictions | UPD | 18:45 | 30.07.2008 |
|---|---|---|---|---|---|---|---|---|
| 986 | 2004 | 9 | 05 | 905-00 | | 229 | | |

PORSCHE PET PORSCHE

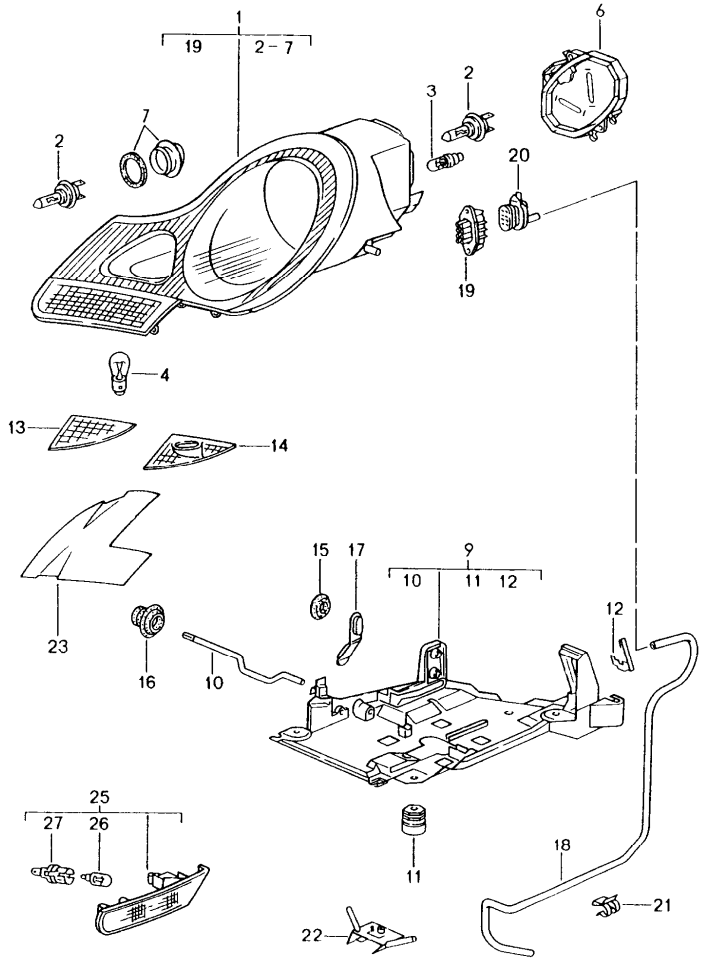


| Pos | Part Number | Description | Remark | Qty | Model |
|---|---|---|---|---|---|
| | | headlamp<br>direction indicator light | | | |
| 1 | 986 631 131 07 | headlamp | /L -02 | 1 | |
| 1 | 986 631 131 17 | headlamp | /L 03- | 1 | |
| 1 | 986 631 132 07 | headlamp | /R -02 | 1 | |
| 1 | 986 631 132 17 | headlamp | /R 03- | 1 | |
| 1 | 986 631 131 11 | headlamp | /L -02 | 1 | M 492 |
| 1 | 986 631 131 21 | headlamp | /L 03- | 1 | M 492 |
| 1 | 986 631 132 11 | headlamp | /R -02 | 1 | M 492 |
| 1 | 986 631 132 21 | headlamp | /R 03- | 1 | M 492 |
| 1 | 986 631 131 15 | headlamp | /L98 -02 | 1 | M 492 (J) |
| 1 | 986 631 132 15 | headlamp | /R98 -02 | 1 | M 492 (J) |
| 2 | 999 631 133 90 | halogen bulb<br>H 7 | | 2 | |
| 3 | 999 631 032 90 | bulb<br>5 W | | 2 | |
| 4 | 900 631 127 90 | bulb<br>21 W | | 2 | |
| 6 | 996 631 231 00 | protective cap<br>headlamp | | 2 | |
| 7 | 996 631 233 00 | protective cap<br>fog headlamp | | 2 | |
| 9 | 996 631 041 00 | mounting | /L | 1 | |
| (9) | 996 631 042 00 | mounting | /R | 1 | |
| 10 | 996 631 243 00 | clamping bow | | 2 | |
| 11 | 996 631 077 00 | fastening part | | 6 | |
| 12 | 996 631 245 00 | locking device<br>connector housing | /L | 1 | |
| (12) | 996 631 246 00 | locking device<br>connector housing | /R | 1 | |
| 13 | 996 631 035 00 | trim cover | /L -02 | 1 | |
| 13 | 996 631 045 00 | trim cover | /L 03- | 1 | |
| (13) | 996 631 036 00 | trim cover | /R -02 | 1 | |

| Pos | Part Number | Description | Remark | Qty | Model |
|---|---|---|---|---|---|
| (13) | 996 631 046 00 | trim cover | /R 03- | 1 | |
| 14 | 996 631 035 01 | trim cover | /L -02 | 1 | M 288 |
| 14 | 996 631 045 01 | trim cover | /L 03- | 1 | M 288 |
| (14) | 996 631 036 01 | trim cover | /R -02 | 1 | M 288 |
| (14) | 996 631 046 01 | trim cover<br>when required order also:<br>only<br>for<br>model year<br>03<br>headlamp<br>right | /R 03- | 1 | M 288 |
| - | 996 631 299 00 | retaining strip<br>for<br>trim cover | /R 03 | 1 | |
| 15 | 803 803 583 A | lid | | 2 | |
| 16 | 999 703 413 40 | stopper | | 2 | |
| (17) | 993 631 170 03 | stopper | | 6 | |
| 18 | 996 631 641 02 | breather pipe<br>F >>98VS6 02683 | /L | 1 | |
| (18) | 996 631 641 03 | breather pipe<br>F 98VS6 02684>> | /L | 1 | |
| (18) | 996 631 642 02 | breather pipe<br>F >>98VS6 02683 | /R | 1 | |
| (18) | 996 631 642 03 | breather pipe<br>F 98VS6 02684>> | /R | 1 | |
| 19 | 999 652 832 40 | connector housing<br>headlamp | | 2 | |
| 20 | 999 650 150 40 | connector housing<br>wiring harness | | 2 | |
| - | 999 652 744 20 | connector | | 16 | |
| - | 999 704 161 40 | gasket | | 16 | |
| 21 | 999 651 317 09 | fastening clamp<br>breather pipe | | X | |
| (21) | 999 651 276 40 | cable holder<br>breather pipe<br>wing strut | | X | |
| (21) | 999 651 282 40 | cable holder<br>breather pipe<br>front apron | | X | |
| 22 | 996 631 693 00 | support<br>mount<br>front apron<br>F 98VS6 02684>> | | 1 | |
| 23 | 996 631 137 00 | set<br>cover foil<br>headlamp<br>for<br>right-hand drive vehicles<br>in rh traffic countries | | 1 | |
| (23) | 996 631 138 00 | set<br>cover foil<br>headlamp<br>for<br>left-hand drive vehicles<br>in lh traffic countries<br>see tpi<br>GR. 9 / NR. 15 | | 1 | |
| | | direction indicator light | | | |
| 25 | 996 631 033 01 | direction indicator light | /L -02 | 1 | |
| 25 | 996 631 043 01 | direction indicator light | 03- | 1 | |
| (25) | 996 631 034 01 | direction indicator light | /R -02 | 1 | |
| (25) | 996 631 044 01 | direction indicator light | /R 03- | 1 | |
| - | 999 652 838 40 | plug socket | | 2 | |
| - | 999 652 771 12 | connector | | 4 | |
| - | 999 704 161 40 | gasket | | 4 | |
| 26 | 999 631 032 90 | bulb<br>5 W<br>white | -02 | 2 | |
| 26 | 999 631 138 90 | bulb<br>5 W<br>yellow | 03- | 2 | |
| 27 | 996 631 133 00 | bulb socket | -02 | 2 | |
| (27) | 996 631 133 01 | bulb socket | 03- | 2 | |

| Model | Year | MG | SG | Illustration | Restrictions | UPD | 18:45 | 30.07.2008 |
|---|---|---|---|---|---|---|---|---|
| 986 | 2004 | 9 | 05 | 905-01 | | 229 | | |

PORSCHE PET PORSCHE

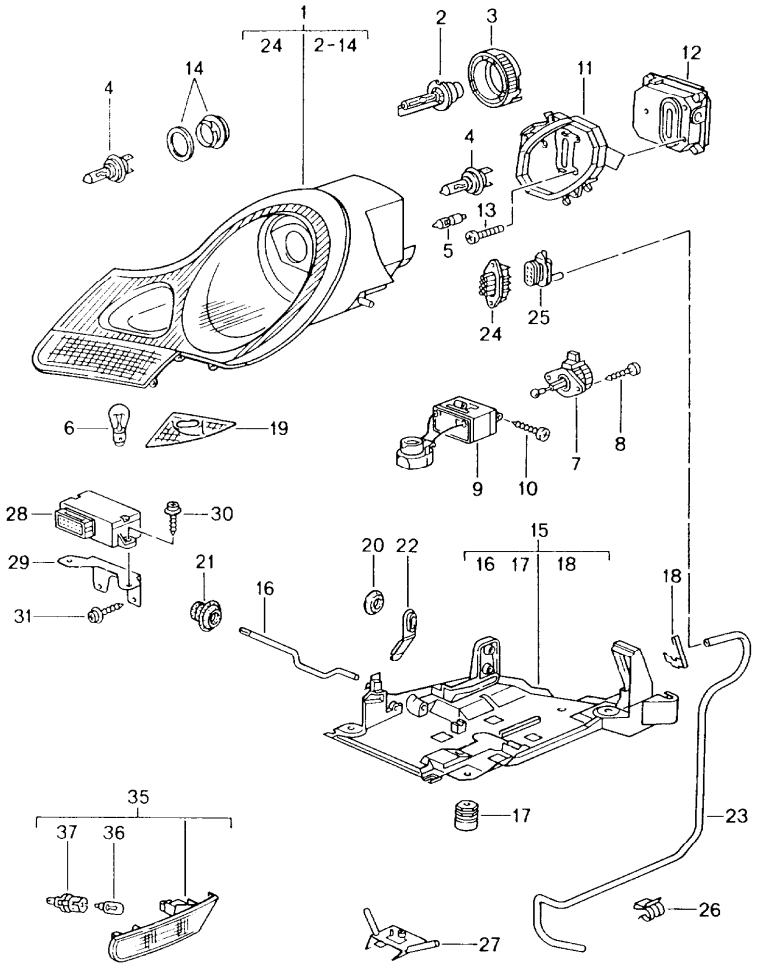


| Pos | Part Number | Description | Remark | Qty | Model |
|---|---|---|---|---|---|
| | | headlamp<br>direction indicator light | 99- | | M 601 |
| 1 | 996 631 157 01 | headlamp | /L | 1 | |
| 1 | 996 631 158 01 | headlamp | /R | 1 | |
| 1 | 996 631 157 04 | headlamp | /L | 1 | M 492 |
| 1 | 996 631 158 04 | headlamp | /R | 1 | M 492 |
| 2 | 999 631 036 90 | bulb<br>- PHILIPS - | | 2 | |
| 3 | 996 631 189 00 | retainer | | 2 | |
| 4 | 999 631 133 90 | halogen bulb<br>H 7 | | 4 | |
| 5 | 999 631 140 90 | bulb<br>H 6 W<br>position light | | 2 | |
| 6 | 900 631 127 90 | bulb<br>21 W<br>direction indicator light | | 2 | |
| 7 | 996 631 125 00 | electric motor<br>headlight levelling system | | 2 | |
| 8 | 996 631 199 00 | screw<br>3,9 X 16 | | 4 | |
| 9 | 996 631 195 01 | ignition control unit | | 2 | |
| 10 | 996 631 199 00 | screw<br>3,9 X 16 | | 4 | |
| 11 | 996 631 241 01 | protective cap<br>headlamp | /L | 1 | |
| (11) | 996 631 242 01 | protective cap<br>headlamp | /R | 1 | |
| 12 | 993 631 193 02 | control unit | | 2 | |
| 13 | 900 146 123 02 | screw<br>M 5 X 16 | | 6 | |
| 14 | 996 631 233 00 | protective cap<br>fog headlamp | | 2 | |
| 15 | 996 631 041 00 | mounting | /L | 1 | |
| (15) | 996 631 042 00 | mounting | /R | 1 | |
| 16 | 996 631 243 00 | clamping bow | | 2 | |

| Pos | Part Number | Description | Remark | Qty | Model |
|---|---|---|---|---|---|
| 17 | 996 631 077 00 | fastening part | | 6 | |
| 18 | 996 631 245 00 | locking device<br>connector housing | /L | 1 | |
| (18) | 996 631 246 00 | locking device<br>connector housing | /R | 1 | |
| 19 | 996 631 045 01 | trim cover | /L | 1 | |
| (19) | 996 631 046 01 | trim cover | /R | 1 | |
| 20 | 803 803 583 A | lid | | 2 | |
| 21 | 999 703 413 40 | stopper | | 2 | |
| 22 | 993 631 170 03 | stopper | | 6 | |
| 23 | 996 631 641 03 | breather pipe | /L | 1 | |
| (23) | 996 631 642 03 | breather pipe | /R | 1 | |
| 24 | 999 652 832 40 | connector housing<br>headlamp | | 2 | |
| 25 | 999 650 150 40 | connector housing<br>wiring harness | | 2 | |
| - | 999 652 744 20 | connector | | 16 | |
| - | 999 704 161 40 | gasket | | 16 | |
| 26 | 999 651 317 09 | fastening clamp<br>breather pipe | | X | |
| (26) | 999 651 276 40 | cable holder<br>breather pipe<br>wing strut | | X | |
| (26) | 999 651 282 40 | cable holder<br>breather pipe<br>front apron | | X | |
| 27 | 996 631 693 00 | support<br>mount<br>front apron | | 1 | |
| 28 | 996 618 151 15 | control unit<br>headlight levelling system | | 1 | |
| 29 | 996 618 155 00 | support<br>F >>981S6 01717<br>F >>981U6 03480<br>F >>981S6 41601<br>F >>981U6 43727 | -01 | 1 | |
| (29) | 996 618 155 13 | support<br>F 981S6 01718>><br>F 981U6 03481>><br>F 981S6 41602>><br>F 981U6 43728>> | -01 | 1 | |
| (29) | 996 618 155 10 | support | 02- | 1 | |
| 30 | 900 143 157 07 | combination screw<br>BZ 4,2 X 13 Z2 | | 2 | |
| 31 | 999 073 169 07 | tapping screw<br>ST 4,8 X 16 | -01 | 2 | |
| 31 | 999 073 196 09 | tapping screw<br>ST 4,8 X 9,5 | 02- | 1 | |
| - | 999 591 855 02 | speed nut<br>4,8 | 02- | 1 | |
| | | sensor<br>headlight levelling system<br>see group<br>4/01/00<br>5/01/01 | <br><br><br>/V<br>/H | | |
| | | direction indicator light | | | |
| 35 | 996 631 033 01 | direction indicator light | /L | 1 | |
| (35) | 996 631 034 01 | direction indicator light | /R | 1 | |
| - | 999 652 838 40 | plug socket | | 2 | |
| - | 999 652 771 12 | connector | | 4 | |
| - | 999 704 161 40 | gasket | | 4 | |
| 36 | 999 631 032 90 | bulb<br>5 W | | 2 | |
| 37 | 996 631 133 00 | bulb socket | | 2 | |

| Model | Year | MG | SG | Illustration | Restrictions | UPD | 18:46 | 30.07.2008 |
|---|---|---|---|---|---|---|---|---|
| 986 | 2004 | 9 | 05 | 905-05 | | 229 | | |

PORSCHE PET PORSCHE

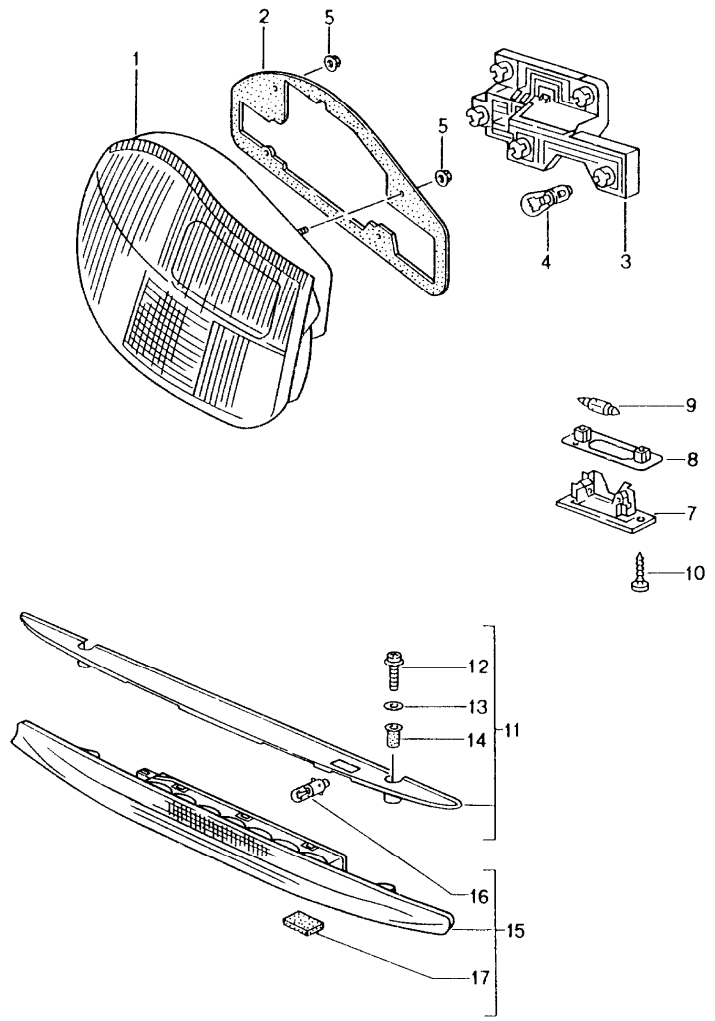


| Pos | Part Number | Description | Remark | Qty | Model |
|---|---|---|---|---|---|
| | | rear light<br>license plate light<br>additional brake light | | | M 602 |
| 1 | 986 631 441 02 | housing<br>with<br>lens<br>use also:<br>gasket<br>986.631.440.00 | /L -98 | 1 | |
| (1) | 986 631 442 02 | housing<br>with<br>lens<br>use also:<br>gasket<br>986.631.440.00 | /R -98 | 1 | |
| 1 | 986 631 441 03 | housing<br>with<br>lens<br>use also:<br>gasket | /L -02 | 1 | |
| (1) | 986 631 442 03 | housing<br>986.631.440.01<br>with<br>lens<br>use also:<br>gasket | /R -02 | 1 | |
| 1 | 986 631 445 03 | housing<br>with<br>lens<br>use also:<br>gasket<br>986.631.440.01 | /L 03- | 1 | |
| (1) | 986 631 446 03 | housing<br>with<br>lens<br>use also:<br>gasket<br>986.631.440.01 | /R 03- | 1 | |
| 2 | 986 631 440 00 | gasket<br>6 MM | -98 | 2 | |
| 2 | 986 631 440 01 | gasket<br>9 MM | 98- | 2 | |
| 3 | 986 631 451 00 | bulb holder | /L -02 | 1 | |
| 3 | 986 631 453 02 | bulb holder | /L 03- | 1 | |
| (3) | 986 631 452 00 | bulb holder | /R -02 | 1 | |

| Pos | Part Number | Description | Remark | Qty | Model |
|---|---|---|---|---|---|
| (3) | 986 631 454 02 | bulb holder | /R 03- | 1 | |
| - | 999 650 079 40 | plug socket | | 2 | |
| - | N 903 352 04 | connector | | 12 | |
| 4 | 900 631 127 90 | bulb<br>21 W<br>white | | X | |
| 4 | 900 631 131 90 | bulb<br>21 W<br>yellow | 03- | X | |
| 4 | 900 631 104 90 | bulb<br>5 W | | X | |
| 5 | 999 076 056 02 | hexagon nut<br>M 5 | | 8 | |
| 7 | 964 631 620 00 | license plate light | | 2 | |
| | 01C | black | | | |
| 8 | 993 631 166 00 | desk pad | | 2 | |
| 9 | 900 631 105 90 | bulb<br>5 W | | 2 | |
| 10 | 900 143 085 07 | tapping screw<br>4,2 X 16 | | 4 | |
| 11 | 986 631 051 00 | trim cover | | 1 | M 602 |
| 12 | 900 146 049 02 | screw<br>M 5 X 25 | | 2 | M 602 |
| 13 | 900 025 003 02 | washer<br>A 5.3 | | 2 | M 602 |
| 14 | A 999 500 077 00 | sheetmetal press nut<br>M 5 | | 2 | M 602 |
| 14 | 999 500 128 00 | sheetmetal press nut<br>M 5 | | 2 | M 602 |
| 15 | 986 631 050 00 | additional brake light | | 1 | M 602 |
| 16 | 900 631 019 90 | bulb<br>3 W | | 7 | M 602 |
| 17 | 996 631 105 00 | desk pad | | 2 | M 602 |

| Pos | Part Number | Description | Remark | Qty | Model |
|---|---|---|---|---|---|

| Model | Year | MG | SG | Illustration | Restrictions | UPD | 18:46 | 30.07.2008 | PORSCHE PET PORSCHE |
|---|---|---|---|---|---|---|---|---|---|
| 986 | 2004 | 9 | 06 | 906-01 | | 229 | | | |

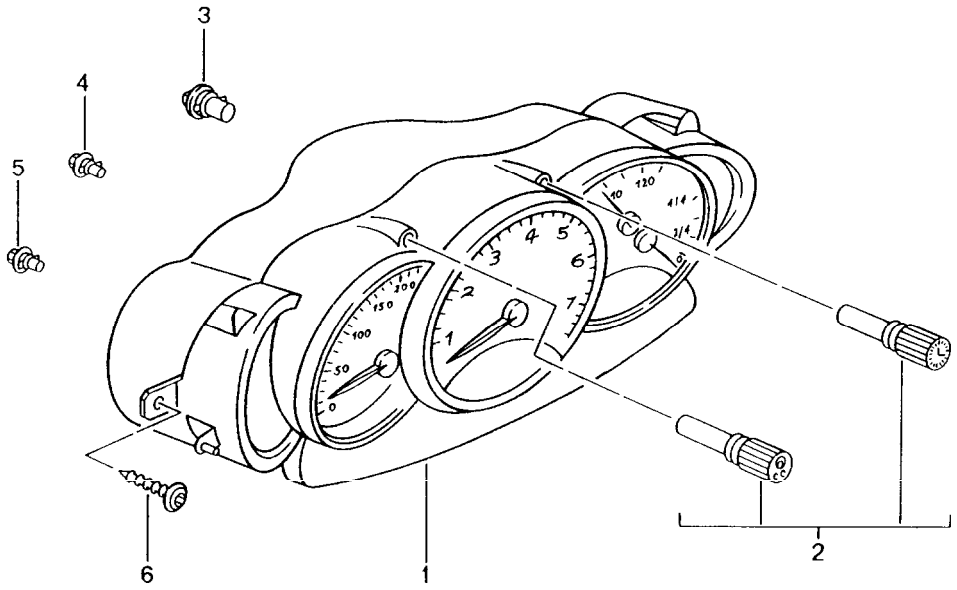


| Pos | Part Number | Description | Remark | Qty | Model |
|---|---|---|---|---|---|
| | | instruments complete | | | |
| | | tech. information memo TI-9-0696-BOX | | | |
| | | instruments X45/X71 see group 9/06/02 | 01- | | |
| | | instrument cluster B O X S T E R | -00 | | |
| (1) | 986 641 105 01 | instrument cluster complete | -99 | 1 | M 481/M 016 |
| | 70C | rally black | | | |
| (1) | 986 641 105 05 | instrument cluster complete | 00 | 1 | M 481/M 016 |
| | 70C | rally black | | | |
| (1) | 986 641 106 01 | instrument cluster complete | -99 | 1 | M 249/M 016 |
| | 70C | rally black | | | |
| (1) | 986 641 106 05 | instrument cluster complete | 00 | 1 | M 249/M 016 |
| | 70C | rally black | | | |
| (1) | 986 641 105 03 | instrument cluster complete | 98-99 | 1 | M 481/M 011 |
| | EMR | ocean jade/black | | | |
| | EBN | zenith blue/black | | | |
| (1) | 986 641 106 03 | instrument cluster complete | 98-99 | 1 | M 249/M 011 |
| | EMR | ocean jade/black | | | |
| | EBN | zenith blue/black | | | |
| (1) | 986 641 105 04 | instrument cluster complete | 98-99 | 1 | M 481/M 012 |
| | EMS | metal grey/black | | | |
| (1) | 986 641 105 08 | instrument cluster complete | 00 | 1 | M 481/M 012 |
| | EMS | metal grey/black | | | |

| Pos | Part Number | Description | Remark | Qty | Model |
|---|---|---|---|---|---|
| (1) | 986 641 106 04 | instrument cluster complete | 98-99 | 1 | M 249/M 012 |
| | EMS | metal grey/black | | | |
| (1) | 986 641 106 08 | instrument cluster complete | 00 | 1 | M 249/M 012 |
| | EMS | metal grey/black | | | |
| (1) | 986 641 107 01 | instrument cluster | -99 | 1 | (GB) M 481 M 016 |
| | | complete | | | |
| | 70C | rally black | | | |
| (1) | 986 641 107 05 | instrument cluster | 00 | 1 | (GB) M 481 M 016 |
| | | complete | | | |
| | 70C | rally black | | | |
| (1) | 986 641 108 01 | instrument cluster | -99 | 1 | (GB) M 249 M 016 |
| | | complete | | | |
| | 70C | rally black | | | |
| (1) | 986 641 108 05 | instrument cluster | 00 | 1 | (GB) M 249 M 016 |
| | | complete | | | |
| | 70C | rally black | | | |
| (1) | 986 641 107 03 | instrument cluster | 98-99 | 1 | (GB) M 481 M 011 |
| | | complete | | | |
| | EMR | ocean jade/black | | | |
| | EBN | zenith blue/black | | | |
| (1) | 986 641 108 03 | instrument cluster | 98-99 | 1 | (GB) M 249 M 011 |
| | | complete | | | |
| | EMR | ocean jade/black | | | |
| | EBN | zenith blue/black | | | |
| (1) | 986 641 107 04 | instrument cluster | 98-99 | 1 | (GB) M 481 M 012 |
| | | complete | | | |
| | EMS | metal grey/black | | | |
| (1) | 986 641 107 08 | instrument cluster | 00 | 1 | (GB) M 481 M 012 |
| | | complete | | | |
| | EMS | metal grey/black | | | |
| (1) | 986 641 108 04 | instrument cluster | 98-99 | 1 | (GB) M 249 M 012 |
| | | complete | | | |
| | EMS | metal grey/black | | | |
| (1) | 986 641 108 08 | instrument cluster | 00 | 1 | (GB) M 249 M 012 |
| | | complete | | | |
| | EMS | metal grey/black | | | |
| | | instrument cluster B O X S T E R | 01- | | |
| (1) | 986 641 205 06 | instrument cluster complete | 01- | 1 | M 481/M 016 |
| | 70C | rally black | | | |
| (1) | 986 641 225 04 | instrument cluster | 02- | 1 | M 481/M 016/ M 659 |
| | | complete | | | |
| | 70C | rally black | | | |
| (1) | 986 641 206 06 | instrument cluster complete | 01- | 1 | M 249/M 016 |
| | 70C | rally black | | | |
| (1) | 986 641 226 04 | instrument cluster | 02- | 1 | M 249/M 016/ M 659 |
| | | complete | | | |
| | 70C | rally black | | | |
| (1) | 986 641 207 06 | instrument cluster | 01- | 1 | (GB) M 481/ M 016 |
| | | complete | | | |
| | 70C | rally black | | | |
| (1) | 986 641 227 04 | instrument cluster | 02- | 1 | (GB) M 481/ M 016/M 659 |
| | | complete | | | |
| | 70C | rally black | | | |

| Pos | Part Number | Description | Remark | Qty | Model |
|---|---|---|---|---|---|
| (1) | 986 641 208 06 | instrument cluster<br>complete | 01- | 1 | (GB) M 249/<br>M 016 |
| | 70C | rally black | | | |
| (1) | 986 641 228 04 | instrument cluster<br>complete | 02- | 1 | (GB) M 249/<br>M 016/M 659 |
| | 70C | rally black | | | |
| (1) | 986 641 205 07 | instrument cluster<br>complete | 01- | 1 | M 481/M 012 |
| | EMS | metal grey/black | | | |
| (1) | 986 641 225 05 | instrument cluster<br>complete | 02- | 1 | M 481/M 012/<br>M 659 |
| | EMS | metal grey/black | | | |
| (1) | 986 641 206 07 | instrument cluster<br>complete | 01- | 1 | M 249/M 012 |
| | EMS | metal grey/black | | | |
| (1) | 986 641 226 05 | instrument cluster<br>complete | 02- | 1 | M 249/M 012/<br>M 659 |
| | EMS | metal grey/black | | | |
| (1) | 986 641 207 07 | instrument cluster<br>complete | 01- | 1 | (GB) M 481/<br>M 012 |
| | EMS | metal grey/black | | | |
| (1) | 986 641 227 05 | instrument cluster<br>complete | 02- | 1 | (GB) M 481/<br>M 012/M 659 |
| | EMS | metal grey/black | | | |
| (1) | 986 641 208 07 | instrument cluster<br>complete | 01- | 1 | (GB) M 249/<br>M 012 |
| | EMS | metal grey/black | | | |
| (1) | 986 641 228 05 | instrument cluster<br>complete | 02- | 1 | (GB) M 249/<br>M 012/M 659 |
| | EMS | metal grey/black | | | |
| | | instrument cluster<br>B O X S T E R S | | | M 008 |
| (1) | 986 641 115 00 | instrument cluster<br>complete | 00 | 1 | M 008/M 480 |
| | EOD | black/silver | | | |
| (1) | 986 641 116 00 | instrument cluster<br>complete | 00 | 1 | M 008/M 249 |
| | EOD | black/silver | | | |
| (1) | 986 641 117 00 | instrument cluster<br>complete | 00 | 1 | (GB) M 008/<br>M 480 |
| | EOD | black/silver | | | |
| (1) | 986 641 118 00 | instrument cluster<br>complete | 00 | 1 | (GB) M 008/<br>M 249 |
| | EOD | black/silver | | | |
| (1) | 986 641 215 03 | instrument cluster<br>complete | 01- | 1 | M 008/M 480 |
| | FHB | black/silver | | | |
| (1) | 986 641 235 02 | instrument cluster<br>complete | 02- | 1 | M 008/M 480/<br>M 659 |
| | FHB | black/silver | | | |
| (1) | 986 641 216 03 | instrument cluster<br>complete | 01- | 1 | M 008/M 249 |
| | FHB | black/silver | | | |
| (1) | 986 641 236 02 | instrument cluster<br>complete | 02- | 1 | M 008/M 249/<br>M 659 |
| | FHB | black/silver | | | |
| (1) | 986 641 217 03 | instrument cluster<br>complete | 01- | 1 | (GB) M 008/<br>M 480 |
| | FHB | black/silver | | | |
| (1) | 986 641 237 02 | instrument cluster<br>complete | 02- | 1 | (GB) M 008/<br>M 480/M 659 |

| Pos | Part Number | Description | Remark | Qty | Model |
|---|---|---|---|---|---|
| | FHB | black/silver | | | |
| (1) | 986 641 218 03 | instrument cluster | 01- | 1 | (GB) M 008/ M 249 |
| | | complete | | | |
| | FHB | black/silver | | | |
| (1) | 986 641 238 02 | instrument cluster | 02- | 1 | (GB) M 008/ M 249/M 659 |
| | | complete | | | |
| | FHB | black/silver | | | |
| (1) | 986 641 245 00 | instrument cluster | 04 | 1 | M 008/M 091/ M 480/M 659 |
| | | complete | | | |
| | 70C | rally black | | | |
| (1) | 986 641 246 00 | instrument cluster | 04 | 1 | M 008/M 091/ M 249/M 659 |
| | | complete | | | |
| | 70C | rally black | | | |
| (1) | 986 641 247 00 | instrument cluster | 04 | 1 | (GB) M 008/ M 091/M 480/ M 659 |
| | | complete | | | |
| | 70C | rally black | | | |
| (1) | 986 641 248 00 | instrument cluster | 04 | 1 | (GB) M 008/ M 091/M 249/ M 659 |
| | | complete | | | |
| | 70C | rally black | | | |
| (2) | 996 641 911 00 | knob actuator trip meter and clock | | 1 | |
| (3) | 999 631 304 90 | glass-base bulb 12 V 3 W | -00 | X | |
| (4) | 999 631 303 90 | glass-base bulb 12 V 1,5 W | -00 | X | |
| (5) | 999 631 302 90 | glass-base bulb 12 V 1,2 W | -00 | X | |
| (6) | W 999 919 119 09 | oval-head screw 5,0 X 22 | | 2 | |
| (6) | 999 919 188 09 | oval-head screw 5,0 X 30 | | 2 | |
| - | 999 920 012 40 | plug-in nut 5,0 X 3,5 X 8 | | 2 | |

| Model | Year | MG | SG | Illustration | Restrictions | UPD | 18:46 | 30.07.2008 | PET |
|---|---|---|---|---|---|---|---|---|---|
| 986 | 2004 | 9 | 06 | 906-02 | | 229 | | | |

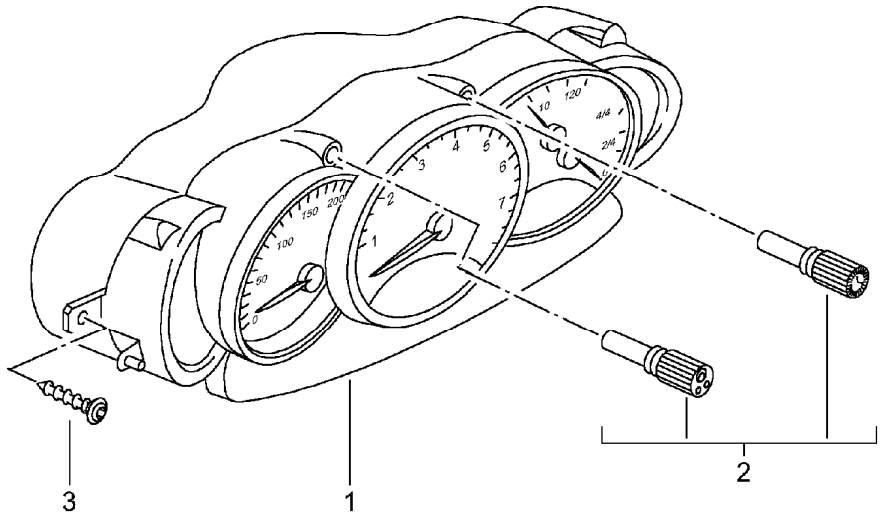


| Pos | Part Number | Description | Remark | Qty | Model |
|---|---|---|---|---|---|
| | | instruments<br>complete | 01- | | X45/X71 |
| | | instrument cluster<br>B O X S T E R<br>dial<br>lacquered<br>interior colour | | | X45 |
| (1) | 986 641 980 64 | instrument cluster<br>complete | 01 | 1 | M 481 |
| | J33 | nephrite green | | | |
| | C53 | graphite grey | | | |
| | S33 | savanna | | | |
| | G13 | metropole blue | | | |
| | M33 | boxster red | | | |
| | P13 | cinnamon brown | | | |
| | D12 | dark grey/natural | | | |
| | T12 | brown/natural | | | |
| (1) | 986 641 981 25 | instrument cluster<br>complete | 02- | 1 | M 481/M 659 |
| | J33 | nephrite green | | | |
| | C53 | graphite grey | | | |
| | S33 | savanna | | | |
| | G13 | metropole blue | | | |
| | M33 | boxster red | | | |
| | P13 | cinnamon brown | | | |
| | D12 | dark grey/natural | | | |
| | T12 | brown/natural | | | |
| (1) | 986 641 980 66 | instrument cluster<br>complete | 01 | 1 | (GB) M 481 |
| | J33 | nephrite green | | | |
| | C53 | graphite grey | | | |
| | S33 | savanna | | | |
| | G13 | metropole blue | | | |

| Pos | Part Number | Description | Remark | Qty | Model |
|---|---|---|---|---|---|
| | M33 | boxster red | | | |
| | P13 | cinnamon brown | | | |
| | D12 | dark grey/natural | | | |
| | T12 | brown/natural | | | |
| (1) | 986 641 981 27 | instrument cluster complete | 02- | 1 | (GB) M 481/ M 659 |
| | J33 | nephrite green | | | |
| | C53 | graphite grey | | | |
| | S33 | savanna | | | |
| | G13 | metropole blue | | | |
| | M33 | boxster red | | | |
| | P13 | cinnamon brown | | | |
| | D12 | dark grey/natural | | | |
| | T12 | brown/natural | | | |
| (1) | 986 641 980 65 | instrument cluster complete | 01 | 1 | M 249 |
| | J33 | nephrite green | | | |
| | C53 | graphite grey | | | |
| | S33 | savanna | | | |
| | G13 | metropole blue | | | |
| | M33 | boxster red | | | |
| | P13 | cinnamon brown | | | |
| | D12 | dark grey/natural | | | |
| | T12 | brown/natural | | | |
| (1) | 986 641 981 26 | instrument cluster complete | 02- | 1 | M 249/M 659 |
| | J33 | nephrite green | | | |
| | C53 | graphite grey | | | |
| | S33 | savanna | | | |
| | G13 | metropole blue | | | |

| Pos | Part Number | Description | Remark | Qty | Model |
|---|---|---|---|---|---|
| | M33 | boxster red | | | |
| | P13 | cinnamon brown | | | |
| | D12 | dark grey/natural | | | |
| | T12 | brown/natural | | | |
| (1) | 986 641 980 67 | instrument cluster complete | 01 | 1 | (GB) M 249 |
| | J33 | nephrite green | | | |
| | C53 | graphite grey | | | |
| | S33 | savanna | | | |
| | G13 | metropole blue | | | |
| | M33 | boxster red | | | |
| | P13 | cinnamon brown | | | |
| | D12 | dark grey/natural | | | |
| | T12 | brown/natural | | | |
| (1) | 986 641 981 28 | instrument cluster complete | 02- | 1 | (GB) M 249/ M 659 |
| | J33 | nephrite green | | | |
| | C53 | graphite grey | | | |
| | S33 | savanna | | | |
| | G13 | metropole blue | | | |
| | M33 | boxster red | | | |
| | P13 | cinnamon brown | | | |
| | D12 | dark grey/natural | | | |
| | T12 | brown/natural | | | |
| | | instrument cluster B O X S T E R dial aluminium | | | X71 |
| (1) | 986 641 983 75 | instrument cluster complete | 01- | 1 | M 481 |
| | 70C | rally black | | | |

| Pos | Part Number | Description | Remark | Qty | Model |
|---|---|---|---|---|---|
| (1) | 986 641 981 75 | instrument cluster complete | 02- | 1 | M 481/M 659 |
| | 70C | rally black | | | |
| (1) | 986 641 983 77 | instrument cluster complete | 01- | 1 | (GB) M 481 |
| | 70C | rally black | | | |
| (1) | 986 641 981 77 | instrument cluster complete | 02- | 1 | (GB) M 481/ M 659 |
| | 70C | rally black | | | |
| (1) | 986 641 983 76 | instrument cluster complete | 01- | 1 | M 249 |
| | 70C | rally black | | | |
| (1) | 986 641 981 76 | instrument cluster complete | 02- | 1 | M 249/M 659 |
| | 70C | rally black | | | |
| (1) | 986 641 983 78 | instrument cluster complete | 01- | 1 | (GB) M 249 |
| | 70C | rally black | | | |
| (1) | 986 641 981 78 | instrument cluster complete | 02- | 1 | (GB) M 249/ M 659 |
| | 70C | rally black | | | |
| | | instrument cluster<br>B O X S T E R S<br>dial<br>lacquered<br>interior colour | | | X45<br>M 008 |
| (1) | 986 641 980 90 | instrument cluster complete | 01 | 1 | M 008/M 480 |
| | A03 | black | | | |
| | J33 | nephrite green | | | |
| | C53 | graphite grey | | | |
| | S33 | savanna | | | |
| | G13 | metropole blue | | | |
| | M33 | boxster red | | | |
| | P13 | cinnamon brown | | | |
| | D12 | dark grey/natural | | | |
| | T12 | brown/natural | | | |
| (1) | 986 641 982 25 | instrument cluster complete | 02- | 1 | M 008/M 480/ M 659 |
| | A03 | black | | | |
| | J33 | nephrite green | | | |
| | C53 | graphite grey | | | |
| | S33 | savanna | | | |
| | G13 | metropole blue | | | |
| | M33 | boxster red | | | |
| | P13 | cinnamon brown | | | |
| | D12 | dark grey/natural | | | |
| | T12 | brown/natural | | | |
| (1) | 986 641 980 92 | instrument cluster complete | 01 | 1 | (GB) M 008/ M 480 |
| | A03 | black | | | |
| | J33 | nephrite green | | | |
| | C53 | graphite grey | | | |
| | S33 | savanna | | | |
| | G13 | metropole blue | | | |
| | M33 | boxster red | | | |
| | P13 | cinnamon brown | | | |
| | D12 | dark grey/natural | | | |
| | T12 | brown/natural | | | |
| (1) | 986 641 982 27 | instrument cluster complete | 02- | 1 | (GB) M 008/ M 480/M 659 |
| | A03 | black | | | |
| | J33 | nephrite green | | | |

| Pos | Part Number | Description | Remark | Qty | Model |
|---|---|---|---|---|---|
| | C53 | graphite grey | | | |
| | S33 | savanna | | | |
| | G13 | metropole blue | | | |
| | M33 | boxster red | | | |
| | P13 | cinnamon brown | | | |
| | D12 | dark grey/natural | | | |
| | T12 | brown/natural | | | |
| (1) | 986 641 980 91 | instrument cluster<br>complete | 01 | 1 | M 008/M 249 |
| | A03 | black | | | |
| | J33 | nephrite green | | | |
| | C53 | graphite grey | | | |
| | S33 | savanna | | | |
| | G13 | metropole blue | | | |
| | M33 | boxster red | | | |
| | P13 | cinnamon brown | | | |
| | D12 | dark grey/natural | | | |
| | T12 | brown/natural | | | |
| (1) | 986 641 982 26 | instrument cluster | 02- | 1 | M 008/M 249/<br>M 659 |
| | | complete | | | |
| | A03 | black | | | |
| | J33 | nephrite green | | | |
| | C53 | graphite grey | | | |
| | S33 | savanna | | | |
| | G13 | metropole blue | | | |
| | M33 | boxster red | | | |
| | P13 | cinnamon brown | | | |
| | D12 | dark grey/natural | | | |
| | T12 | brown/natural | | | |

| Pos | Part Number | Description | Remark | Qty | Model |
|---|---|---|---|---|---|
| (1) | 986 641 980 93 | instrument cluster | 01 | 1 | (GB) M 008/<br>M 249 |
| | | complete | | | |
| | A03 | black | | | |
| | J33 | nephrite green | | | |
| | C53 | graphite grey | | | |
| | S33 | savanna | | | |
| | G13 | metropole blue | | | |
| | M33 | boxster red | | | |
| | P13 | cinnamon brown | | | |
| | D12 | dark grey/natural | | | |
| | T12 | brown/natural | | | |
| (1) | 986 641 982 28 | instrument cluster | 02- | 1 | (GB) M 008/<br>M 249/M 659 |
| | | complete | | | |
| | A03 | black | | | |
| | J33 | nephrite green | | | |
| | C53 | graphite grey | | | |
| | S33 | savanna | | | |
| | G13 | metropole blue | | | |
| | M33 | boxster red | | | |
| | P13 | cinnamon brown | | | |
| | D12 | dark grey/natural | | | |
| | T12 | brown/natural | | | |
| 2 | 996 641 911 00 | knob<br>actuator<br>trip meter<br>and<br>clock | | 2 | |
| 3 | 999 919 188 09 | oval-head screw<br>5,0 X 30 | | 2 | |

| Model | Year | MG | SG | Illustration | Restrictions | UPD | 18:46 | 30.07.2008 |
|---|---|---|---|---|---|---|---|---|
| 986 | 2004 | 9 | 07 | 907-00 | | 229 | | |

| Pos | Part Number | Description | Remark | Qty | Model |
|---|---|---|---|---|---|
| | | **cruise control**<br><br>**see group 4/03/05** | | | |

| Model | Year | MG | SG | Illustration | Restrictions | UPD | 18:46 | 30.07.2008 | PET |
|---|---|---|---|---|---|---|---|---|---|
| 986 | 2004 | 9 | 11 | 911-00 | | 229 | | | |

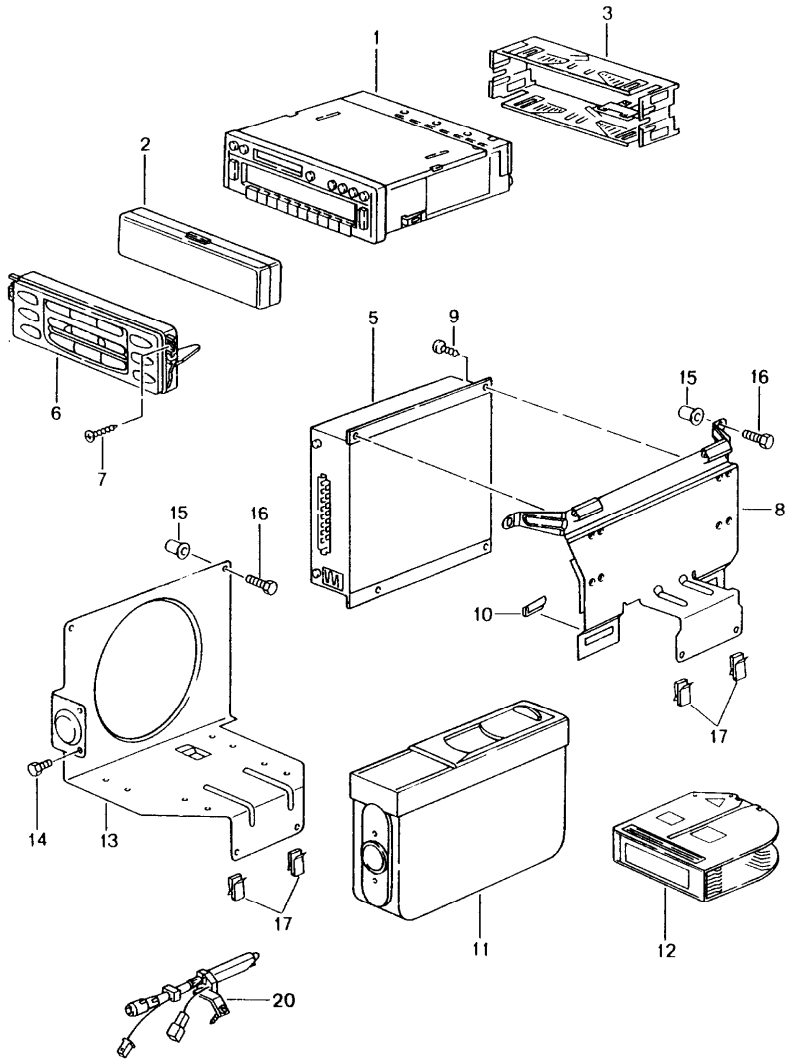


| Pos | Part Number | Description | Remark | Qty | Model |
|---|---|---|---|---|---|
| | | radio<br>booster | -02<br>-02 | | |
| 1 | > 993 645 118 01 | radio<br>CR - 31 | -98 | 1 | M 330 |
| 1 | > 993 645 116 01 | radio<br>CR - 21 | -98 | 1 | M 326 |
| 1 | > 993 645 115 01 | radio<br>CR - 11 | -98 | 1 | M 320 |
| 1 | > 993 645 119 01 | radio<br>CDR - 21 | -98 | 1 | M 686 |
| 2 | 993 645 190 00 | case<br>for<br>control part<br>radio | -98 | 1 | |
| | | new design<br>radio<br>see catalogue<br>- TEQUIPMENT - | 99- | | |
| (2) | 996 645 190 00 | case<br>for<br>control part<br>radio | 99- | 1 | |
| 3 | 993 645 173 00 | retaining frame | -98 | 1 | |
| - | 996 645 106 00 | alarm contact<br>plate<br>for<br>radio | 99- | 1 | |
| 5 | 986 645 301 03 | booster | -00 | 1 | M 490 |
| (5) | 986 645 323 00 | booster | 01- | 1 | M 490 |
| - | 996 610 149 00 | cap<br>connector housing<br>booster | | 1 | M 490 |
| (5) | 986 645 302 01 | booster<br>digital sound processing | 98 | 1 | M 680 |
| (5) | 986 645 312 00 | booster<br>digital sound processing | -00 | 1 | M 680 |
| (5) | 986 645 324 01 | booster<br>digital sound processing | 01 | 1 | M 680 |
| (5) | 986 645 338 00 | booster<br>bose | 02 | 1 | M 680 |

| Pos | Part Number | Description | Remark | Qty | Model |
|---|---|---|---|---|---|
| (5) | 996 645 341 00 | additional amplifier<br>bose | 02 | 1 | M 680 |
| - | 996 610 151 00 | cap<br>connector housing<br>booster | /LL 02 | 1 | M 680 |
| - | 996 610 150 01 | cover<br>connector housing<br>booster | /RL 02 | 1 | M 680 |
| - | 996 610 152 00 | cap<br>connector housing<br>additional amplifier | 02 | 1 | M 680 |
| 6 | 996 645 201 02 | control part | -01 | 1 | M 680 |
| | EFR | gloss black | | | |
| 7 | 999 919 182 09 | oval-head screw<br>4,0 X 20 | -01 | 2 | M 680 |
| 8 | 996 646 025 01 | support | -01 | 1 | M 490/M 680 |
| 8 | 996 646 025 01 | support | 02 | 1 | M 490 |
| (8) | 996 645 255 11 | support | 02 | 1 | M 680 |
| 9 | 900 143 031 02 | oval-head sheetmetal screw<br>4,2 X 9,5 | | 2 | M 490/M 680 |
| 10 | 999 507 510 02 | u-clamp | | 2 | M 490/M 680 |
| - | 999 073 048 02 | tapping screw<br>3,5 X 13 | 02 | 1 | M 680 |
| 11 | > 993 645 130 00 | cd changer<br>CDC - 3 | | 1 | M 692 |
| 12 | 993 645 113 00 | magazine<br>for<br>cd changer | | 1 | M 692 |
| 13 | 996 645 221 00 | support | /LL | 1 | M 692/M 689 |
| (13) | 996 645 222 00 | support | /RL | 1 | M 692/M 689 |
| 14 | 999 075 067 09 | combination screw<br>M 4 X 8 KO | | 6 | |
| 15 | 999 500 078 00 | sheetmetal press nut<br>M 6 | | 4 | |
| 16 | 900 378 188 09 | hexagon-head bolt<br>M 6 X 20 | | 4 | |
| 17 | 999 507 532 02 | u-clamp | | 4 | |

| Pos | Part Number | Description | Remark | Qty | Model |
|---|---|---|---|---|---|
| 20 | 986 647 105 00 | antenna booster | | 1 | |
| - | 986 612 072 00 | connecting cable<br>antenna booster<br>radio | | 1 | |

| Model | Year | MG | SG | Illustration | Restrictions | UPD | 18:47 | 30.07.2008 |
|---|---|---|---|---|---|---|---|---|
| 986 | 2004 | 9 | 11 | 911-01 | | 229 | | |

PORSCHE PET PORSCHE

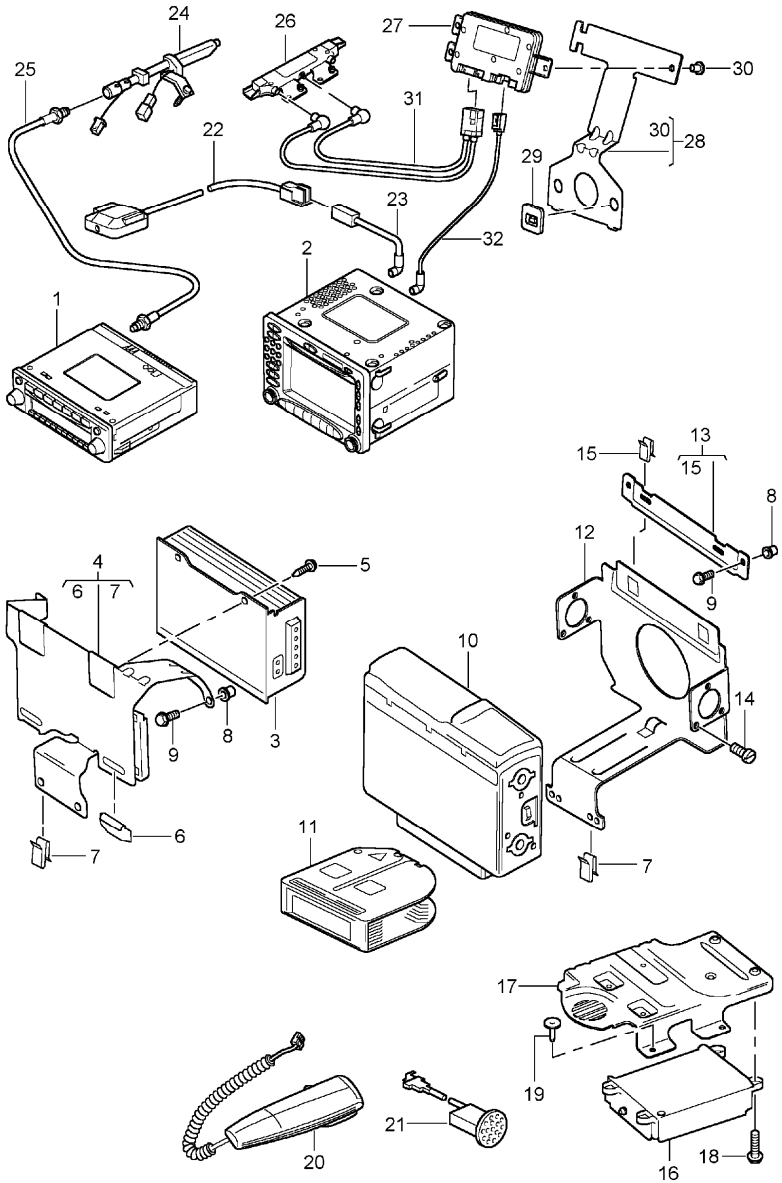


| Pos | Part Number | Description | Remark | Qty | Model |
|---|---|---|---|---|---|
| | | radio<br>booster<br>navigation system<br>telephone | 03-<br>03-<br>03-<br>03- | | |
| 1 | - | radio<br>see catalogue<br>tequipment | | | |
| 2 | A 996 642 204 02 | control part | 03 | 1 | M 665 |
| | A05 | black mat<br>see technical information<br>GR.9 , NR. 4/03<br>GR.9 , NR. 5/03 | | | |
| 2 | A 996 642 204 03 | control part | 03 | 1 | M 665 |
| | A05 | black mat<br>see technical information<br>GR.9 , NR. 4/03<br>GR.9 , NR. 5/03<br>GR.9 , NR.10/03 | | | |
| 2 | A 996 642 204 04 | control part | 03 | 1 | M 665 |
| | A05 | black mat<br>see technical information<br>GR.9 , NR. 4/03<br>GR.9 , NR. 5/03<br>GR.9 , NR.10/03 | | | |
| 2 | A 996 642 204 05 | control part | 03- | 1 | M 665 |
| | A05 | black mat<br>see technical information<br>GR.9 , NR. 10/03 | | | |
| 2 | A 996 642 204 06 | control part | 03- | 1 | M 665 |
| | A05 | black mat<br>see technical information<br>GR.9 , NR. 10/03 | | | |
| 2 | > 996 642 204 07 | control part | 03- | 1 | M 665 |
| | A05 | black mat<br>see technical information<br>GR.9 , NR. 10/03 | | | |
| (2) | A 996 642 214 02 | control part | 03 | 1 | M665/490/680 |
| | A05 | black mat<br>see technical information<br>GR.9 , NR. 4/03<br>GR.9 , NR. 5/03 | | | |

| Pos | Part Number | Description | Remark | Qty | Model |
|---|---|---|---|---|---|
| (2) | A 996 642 214 03 | control part | 03 | 1 | M665/490/680 |
| | A05 | black mat<br>see technical information<br>GR.9 , NR. 4/03<br>GR.9 , NR. 5/03 | | | |
| (2) | A 996 642 214 04 | control part | 03 | 1 | M665/490/680 |
| | A05 | black mat<br>see technical information<br>GR.9 , NR. 4/03<br>GR.9 , NR. 5/03<br>GR.9 , NR.10/03 | | | |
| (2) | A 996 642 214 05 | control part | 03- | 1 | M665/490/680 |
| | A05 | black mat<br>see technical information<br>GR.9 , NR. 10/03 | | | |
| (2) | A 996 642 214 06 | control part | 03- | 1 | M665/490/680 |
| | A05 | black mat<br>see technical information<br>GR.9 , NR. 10/03 | | | |
| (2) | > 996 642 214 07 | control part | 03- | 1 | M665/490/680 |
| | A05 | black mat<br>see technical information<br>GR.9 , NR. 10/03 | | | |
| - | 996 642 951 00 | rotary knob<br>for<br>POS. 2 | /L 03- | 1 | |
| - | 996 642 952 00 | rotary knob<br>for<br>POS. 2 | /R 03- | 1 | |
| - | 996 642 941 00 | cover<br>Drawer<br>SIM card<br>for<br>POS. 2 | 03- | 1 | |
| - | A 996 642 205 01 | module<br>navigation system | 03 | 1 | M 670 |
| - | 996 642 205 02 | module<br>navigation system | 03- | 1 | M 670 |
| - | A 996 642 030 00 | cd-rom<br>navigation system<br>see technical information<br>GR.9 , NR. 10/03 | 03 | 1 | M 670 |
| - | A 996 642 030 01 | cd-rom<br>navigation system | 03 | 1 | M 670 |
| - | A 996 642 030 02 | cd-rom<br>see technical information<br>GR.9 , NR. 10/03<br>navigation system | 04 | 1 | M 670 |
| - | A 996 642 034 01 | cd-rom<br>navigation system | 04 | 1 | (ZA) M 670 |
| - | 996 642 034 02 | cd-rom<br>see technical information<br>GR.9 , NR. 10/03<br>navigation system | 04 | 1 | (ZA) M 670 |
| - | 996 642 035 01 | cd-rom<br>navigation system<br>see technical information<br>GR.9 , NR. 10/03 | 04 | 1 | (SA),(AG)<br>M 670 |
| - | A 996 642 036 01 | cd-rom | 04 | 1 | (AUS) M 670 |
| - | 996 642 036 02 | cd-rom<br>navigation system<br>see technical information<br>GR.9 , NR. 10/03 | 04 | 1 | (AUS) M 670 |
| - | 996 642 037 01 | cd-rom<br>see technical information<br>GR. 9 , NR. 10/03<br>navigation system | 04 | 1 | M 068/M 074<br>M 670 |
| 3 | U 996 645 331 01 | booster<br>see technical information<br>GR.9 , NR. 4/03<br>GR.9 , NR. 5/03 | 03 | 1 | M 490 |
| 3 | A 996 645 331 02 | booster<br>see technical information<br>GR.9 , NR. 4/03<br>GR.9 , NR. 5/03 | 03 | 1 | M 490 |
| 3 | 996 645 331 03 | booster<br>see technical information<br>GR.9 , NR. 4/03<br>GR.9 , NR. 5/03 | 03- | 1 | M 490 |
| (3) | U 996 645 333 02 | booster<br>see technical information<br>GR.9 , NR. 4/03<br>GR.9 , NR. 5/03 | /LL 03 | 1 | M 680 |

| Pos | Part Number | Description | Remark | Qty | Model |
|---|---|---|---|---|---|
| (3) | A 996 645 333 03 | booster<br>see technical information<br>GR.9 , NR. 4/03<br>GR.9 , NR. 5/03<br>GR.9 , NR.10/03 | /LL 03 | 1 | M 680 |
| (3) | A 996 645 333 04 | booster<br>see technical information<br>GR.9 , NR. 4/03<br>GR.9 , NR. 5/03<br>GR.9 , NR.10/03 | /LL 03 | 1 | M 680 |
| (3) | A 996 645 333 05 | booster | /LL 03- | 1 | M 680 |
| (3) | > 996 645 333 07 | booster<br>see technical information<br>GR.9 , NR. 14/03<br>GR.9 , NR. 10/03 | /LL 03- | 1 | M 680 |
| (3) | U 996 645 332 01 | booster<br>see technical information<br>GR.9 , NR. 4/03<br>GR.9 , NR. 5/03 | /RL 03 | 1 | M 680 |
| (3) | A 996 645 332 03 | booster<br>see technical information<br>GR.9 , NR. 4/03<br>GR.9 , NR. 5/03<br>GR.9 , NR.10/03 | /RL 03 | 1 | M 680 |
| (3) | A 996 645 332 04 | booster<br>see technical information<br>GR.9 , NR. 4/03<br>GR.9 , NR. 5/03<br>GR.9 , NR.10/03 | /RL 03 | 1 | M 680 |
| (3) | A 996 645 332 05 | booster<br>see technical information<br>GR.9 , NR. 14/03<br>GR.9 , NR. 10/03 | /RL 03- | 1 | M 680 |
| (3) | > 996 645 332 07 | booster<br>see technical information<br>GR.9 , NR. 14/03<br>GR.9 , NR. 10/03 | /RL 03- | 1 | M 680 |
| - | 996 610 151 00 | cap<br>connector housing<br>booster | /LL | 1 | M 490/M 680 |
| - | 996 610 150 01 | cap<br>connector housing<br>booster | /RL | 1 | M 490/M 680 |
| 4 | 996 645 255 01 | support | | 1 | M 490/M 680 |
| 5 | 900 143 031 02 | tapping screw<br>4,2 X 9,5 | | 2 | M 490/M 680 |
| 6 | 999 507 510 02 | u-clamp | | 2 | M 490/M 680 |
| 7 | 999 507 532 02 | u-clamp | | X | |
| 8 | 999 500 078 00 | sheetmetal press nut<br>M 6 | | X | |
| 9 | 900 378 188 09 | hexagon-head bolt<br>M 6 X 20 | | X | |
| 10 | A 997 645 140 02 | cd changer<br>CDC 4<br>adjustment<br>installation<br>attention<br>see technical information<br>GR.9 , NR. 4/03<br>GR.9 , NR. 5/03 | | 1 | M 692 |
| 10 | > 997 645 140 03 | cd changer<br>CDC 4<br>adjustment<br>installation<br>attention<br>see technical information<br>GR.9 , NR. 4/03<br>GR.9 , NR. 5/03 | | 1 | |
| 11 | 996 645 113 00 | magazine<br>cd changer | | 1 | M 692 |
| 12 | 996 645 225 00 | support | | 1 | M 692 |
| 13 | 996 645 227 00 | support | | 1 | M 692 |
| 14 | N 014 128 13 | oval-head screw<br>M 5 X 8 | | 6 | M 692 |
| 15 | 999 591 954 09 | u-clamp | | 2 | M 692 |
| 16 | A 996 642 207 01 | control unit<br>telephone<br>see technical information<br>GR.9 , NR. 4/03<br>GR.9 , NR. 5/03 | 03 | 1 | M 666 |
| 16 | A 996 642 207 02 | control unit<br>telephone<br>see technical information<br>GR.9 , NR. 4/03<br>GR.9 , NR. 5/03 | 03 | 1 | M 666 |

| Pos | Part Number | Description | Remark | Qty | Model |
|---|---|---|---|---|---|
| 16 | A 996 642 207 04 | control unit<br>telephone<br>see technical information<br>GR.9 , NR. 4/03<br>GR.9 , NR. 5/03 | 03 | 1 | M 666 |
| 16 | A 996 642 207 05 | control unit<br>telephone<br>see technical information<br>GR.9 , NR. 9/04 | | 1 | M 666 |
| 16 | A 997 646 207 01 | control unit<br>telephone | | 1 | M 666 |
| 16 | > 997 646 207 02 | control unit<br>MOTOROLA<br>telephone | | 1 | M 666 |
| 16 | > 997 646 208 04 | control unit<br>HARMAN - BECKER<br>telephone<br><br>when required order also: | | 1 | M 666 |
| - | 997 612 989 00 | connecting line<br>adapter<br>for<br>control unit<br>997.646.208.04 | | 1 | M 666 |
| 17 | 996 642 216 00 | support | | 1 | M 666 |
| 18 | 900 378 035 01 | hexagon-head bolt<br>M 6 X 16 | | 2 | M 666 |
| 19 | 999 073 060 02 | tapping screw<br>4,8 X 13<br><br>antenna<br>telephone<br>see group<br>9 /11/10 | | 4 | M 666 |
| 20 | 996 642 212 02 | receiver<br>telephone<br><br>bracket<br>telephone<br>see group<br>9 /11/10 | | 1 | M 668 |
| 21 | 996 646 307 02 | microphone | /LL | 1 | M 618/M 666 |
| | A03 | black | | | |
| | C02 | metal grey | | | M 012 |
| | C53 | graphite grey | | | |
| | S33 | savanna | | | |
| | G13 | metropole blue | | | |
| | J33 | nephrite green | | | |
| | M33 | boxster red | | | |
| | P13 | cinnamon brown | | | |
| (21) | 996 646 308 02 | microphone | /RL | 1 | M 618/M 666 |
| | A03 | black | | | |
| | C02 | metal grey | | | M 012 |
| | C53 | graphite grey | | | |
| | S33 | savanna | | | |
| | G13 | metropole blue | | | |
| | J33 | nephrite green | | | |
| | M33 | boxster red | | | |
| | P13 | cinnamon brown | | | |
| (21) | 996 646 307 05 | microphone | /LL 04 | 1 | M 091/M 618/<br>M 666 |
| | M7Z | gt silver metallic | | | |
| (21) | 996 646 308 05 | microphone | /RL 04 | 1 | M 091/M 618/<br>M 666 |
| | M7Z | gt silver metallic | | | |
| (21) | 996 646 307 03 | microphone | /LL | 1 | M 618/M 666/<br>M 680 |
| | A03 | black | | | |
| | C02 | metal grey | | | M 012 |
| | C53 | graphite grey | | | |
| | S33 | savanna | | | |
| | G13 | metropole blue | | | |
| | J33 | nephrite green | | | |
| | M33 | boxster red | | | |

| Pos | Part Number | Description | Remark | Qty | Model |
|---|---|---|---|---|---|
| | P13 | cinnamon brown | | | |
| (21) | 996 646 308 03 | microphone | /RL | 1 | M 618/M 666/ M 680 |
| | A03 | black | | | |
| | C02 | metal grey | | | M 012 |
| | C53 | graphite grey | | | |
| | S33 | savanna | | | |
| | G13 | metropole blue | | | |
| | J33 | nephrite green | | | |
| | M33 | boxster red | | | |
| | P13 | cinnamon brown | | | |
| (21) | 996 646 307 06 | microphone | /LL 04 | 1 | M 091/M 618/ M 666/M 680 |
| | M7Z | gt silver metallic | | | |
| (21) | 996 646 308 06 | microphone | /RL 04 | 1 | M 091/M 618/ M 666/M 680 |
| | M7Z | gt silver metallic | | | |
| (21) | 996 646 307 04 | microphone | /LL | 1 | M 680 |
| | A03 | black | | | |
| | C02 | metal grey | | | M 012 |
| | C53 | graphite grey | | | |
| | S33 | savanna | | | |
| | G13 | metropole blue | | | |
| | J33 | nephrite green | | | |
| | M33 | boxster red | | | |
| | P13 | cinnamon brown | | | |
| (21) | 996 646 308 04 | microphone | /RL | 1 | M 680 |
| | A03 | black | | | |
| | C02 | metal grey | | | M 012 |
| | C53 | graphite grey | | | |

| Pos | Part Number | Description | Remark | Qty | Model |
|---|---|---|---|---|---|
| | S33 | savanna | | | |
| | G13 | metropole blue | | | |
| | J33 | nephrite green | | | |
| | M33 | boxster red | | | |
| | P13 | cinnamon brown | | | |
| (21) | 996 646 307 07 | microphone | /LL 04 | 1 | M 091/M 680 |
| | M7Z | gt silver metallic | | | |
| (21) | 996 646 308 07 | microphone | /RL 04 | 1 | M 091/M 680 |
| | M7Z | gt silver metallic | | | |
| 22 | 996 642 206 00 | antenna GPS | | 1 | M 670 |
| 23 | 996 612 009 00 | connecting line antenna module navigation system | | 1 | M 670 |
| 24 | 986 647 105 00 | antenna booster radio | | 1 | M 441 |
| 25 | 986 612 072 01 | connecting line antenna booster radio | | 1 | M 441 |
| 26 | 986 647 117 00 | antenna booster | /L | 1 | M 440 |
| (26) | 986 647 118 00 | antenna booster | /R | 1 | M 440 |
| 27 | 996 647 124 00 | control unit | | 1 | M 440 |
| 28 | 996 647 202 00 | support | | 1 | M 440 |
| 29 | 999 507 772 40 | clip | | 1 | M 440 |
| 30 | 999 507 771 40 | stopper | | 1 | M 440 |
| 31 | 996 612 057 00 | connecting line antenna booster left control unit | /LL | 1 | M 665 |
| (31) | 996 612 067 00 | connecting line antenna booster left control unit | /RL | 1 | M 665 |

| Pos | Part Number | Description | Remark | Qty | Model |
|---|---|---|---|---|---|
| (31) | 996 612 056 00 | connecting line<br>antenna booster<br>right<br>control unit | /LL | 1 | M 665 |
| (31) | 996 612 066 00 | connecting line<br>antenna booster<br>right<br>control unit | /RL | 1 | M 665 |
| 32 | 996 612 058 00 | connecting line<br>control unit<br>control part<br>connector<br>CURRY | /LL | 1 | M 665 |
| (32) | 996 612 068 00 | connecting line<br>control unit<br>control part<br>connector<br>CURRY | /RL | 1 | M 665 |
| (32) | 996 612 059 00 | connecting line<br>control unit<br>control part<br>connector<br>natural colours | /LL | 1 | M 665 |
| (32) | 996 612 069 00 | connecting line<br>control unit<br>control part<br>connector<br>natural colours | /RL | 1 | M 665 |

| Pos | Part Number | Description | Remark | Qty | Model |
|---|---|---|---|---|---|

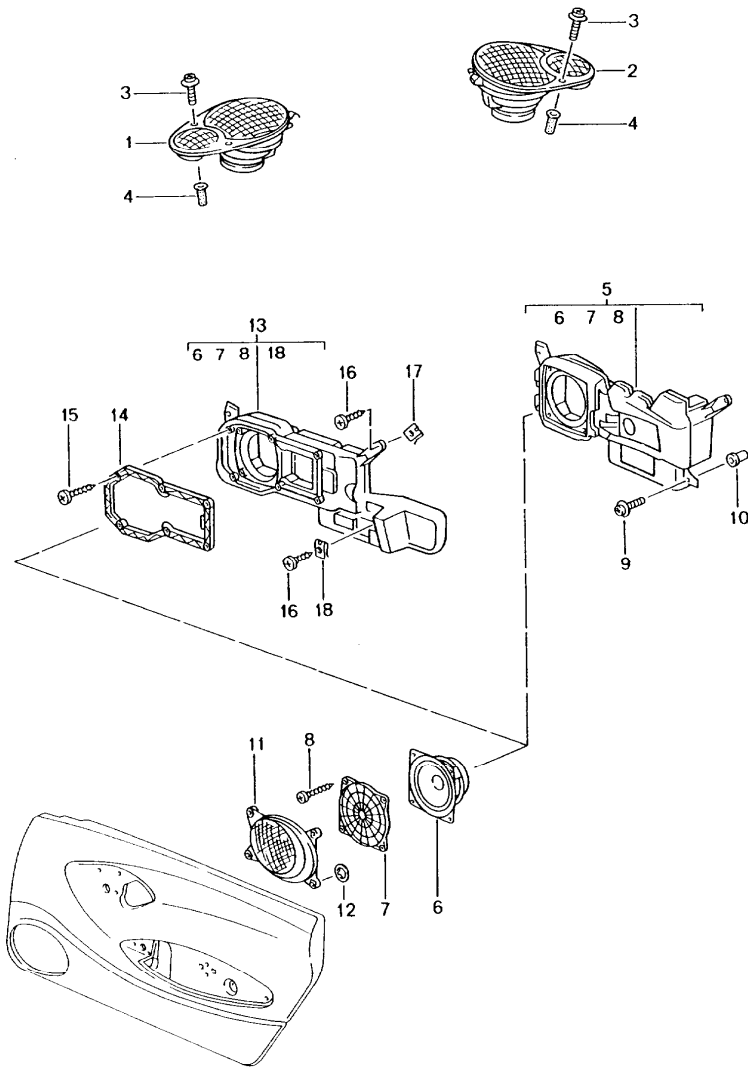


| Pos | Part Number | Description | Remark | Qty | Model |
|---|---|---|---|---|---|
| | | loudspeaker<br>loudspeaker<br>M 680/MJ.02-<br>see group<br>9 / 11 / 06 | | | |
| 1 | 996 645 037 02 | loudspeaker | /L | 1 | M 490 |
| | 01C | satin black | | | |
| (1) | 996 645 035 02 | loudspeaker | /L | 1 | M 441 |
| | 01C | satin black | | | |
| 2 | 996 645 038 02 | loudspeaker | /R | 1 | M 490 |
| | 01C | satin black | | | |
| (2) | 996 645 036 02 | loudspeaker | /R | 1 | M 441 |
| | 01C | satin black | | | |
| (2) | 996 645 049 02 | loudspeaker grille | /L/R | 2 | |
| | 01C | satin black | | | |
| 3 | 999 919 166 07 | oval-head screw<br>4,0 X 30 | -01 | 4 | |
| (3) | 999 073 224 09 | tapping screw<br>4,2 X 25 | 02- | 4 | |
| 4 | 999 920 015 40 | plug-in nut<br>4,0 | -01 | 4 | |
| (4) | 999 507 767 02 | speed nut<br>4,2 | 02- | 2 | |
| (4) | 999 507 768 02 | speed nut<br>4,2 | 02- | 2 | |
| (5) | 996 645 011 01 | loudspeaker | /L -00 | 1 | M 490 |
| 5 | 996 645 012 01 | loudspeaker | /R -00 | 1 | M 490 |
| 6 | 996 645 501 00 | woofer | -02 | 2 | M 490 |
| 6 | 996 645 502 00 | woofer | 03- | 2 | M 490 |
| 7 | 996 645 550 00 | protective grille | | 2 | M 490 |
| (8) | 999 919 176 07 | oval-head screw<br>4,0 X 16 | | 8 | M 490 |
| 9 | 999 919 123 09 | oval-head screw<br>5,0 X 20 | 97 | 8 | M 490 |

| Pos | Part Number | Description | Remark | Qty | Model |
|---|---|---|---|---|---|
| (9) | 999 073 061 02 | tapping screw<br>ST 4,8 X 16 | -00 | 8 | M 490 |
| 10 | 999 920 013 40 | plug-in nut<br>5,0 | 97 | 8 | M 490 |
| (10) | 999 591 499 02 | speed nut<br>ST 4,8<br>only together with<br>999.073.061.02 | -00 | 8 | M 490 |
| 11 | 996 555 801 00 | loudspeaker grille | -99 | 2 | M 490 |
| | 01C | satin black | | | |
| 11 | 996 555 801 01 | loudspeaker grille | 00- | 2 | M 490 |
| | A03 | black<br>lacquered | | | |
| (11) | 000 043 206 88 | loudspeaker grille<br>frame<br>leather<br>grille<br>aluminium look | | 2 | M 490/XTR |
| | A10 | black | | | |
| | C50 | graphite grey | | | |
| | S30 | savanna | | | |
| | G10 | metropole blue | | | |
| | J30 | nephrite green | | | |
| | M30 | boxster red | | | |
| | P11 | cinnamon brown | | | |
| | D11 | dark grey/natural | | | |
| | T11 | brown/natural | | | |
| 12 | 999 591 946 02 | clamping washer<br>5,0 | | 8 | M 490 |
| 13 | 996 645 551 00 | loudspeaker | /L -02 | 1 | M 490 |
| 13 | 996 645 551 01 | loudspeaker | /L 03- | 1 | M 490 |
| (13) | 996 645 552 00 | loudspeaker | /R -02 | 1 | M 490 |
| (13) | 996 645 552 01 | loudspeaker | /R 03- | 1 | M 490 |
| 14 | 996 645 553 00 | frame | 01- | 2 | M 490 |
| 15 | 999 919 086 02 | oval-head screw<br>4,0 X 14 | 01- | 12 | M 490 |
| 16 | 999 073 061 02 | tapping screw<br>4,8 X 16 | 01- | 8 | M 490 |
| 17 | 999 591 499 02 | speed nut<br>4,8 | 01- | 6 | M 490 |
| 18 | 999 507 759 09 | speed nut<br>4,8 | 01- | 2 | M 490 |
| - | 986 645 503 00 | loudspeaker<br>storage box | -01 | 4 | M 680/M 584 |
| - | 986 612 085 00 | wiring harness<br>loudspeaker<br><br>single parts<br>storage box<br>see group<br>8 / 07 / 07 | -01 | 1 | M 680/M 584 |

| Model | Year | MG | SG | Illustration | Restrictions | UPD | 18:47 | 30.07.2008 | PET |
|---|---|---|---|---|---|---|---|---|---|
| 986 | 2004 | 9 | 11 | 911-06 | | 229 | | | |

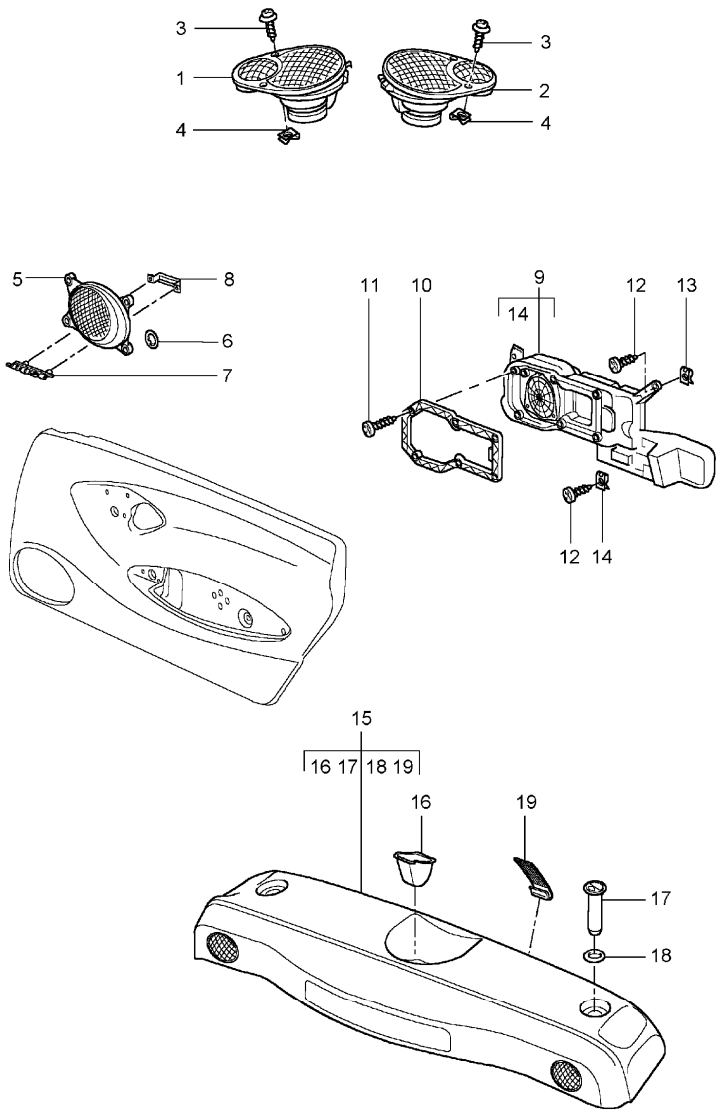


| Pos | Part Number | Description | Remark | Qty | Model |
|---|---|---|---|---|---|
| | | loudspeaker | 02- | | M 680 |
| 1 | 996 645 033 01 | loudspeaker | /L | 1 | M 680 |
| | 01C | satin black | | | |
| 2 | 996 645 034 01 | loudspeaker | /R | 1 | M 680 |
| | 01C | satin black | | | |
| 1 | 996 645 033 00 | loudspeaker | /L | 1 | M 680/ XPP |
| | C50 | graphite grey | | | |
| | S30 | savanna | | | |
| | G10 | metropole blue | | | |
| | J30 | nephrite green | | | |
| | M30 | boxster red | | | |
| | P10 | cinnamon brown | | | |
| 2 | 996 645 034 00 | loudspeaker | /R | 1 | M 680/ XPP |
| | C50 | graphite grey | | | |
| | S30 | savanna | | | |
| | G10 | metropole blue | | | |
| | J30 | nephrite green | | | |
| | M30 | boxster red | | | |
| | P10 | cinnamon brown | | | |
| (3) | 999 073 224 09 | tapping screw<br>4,2 X 25 | | 4 | |
| (4) | 999 507 767 02 | speed nut<br>4,2 | | 2 | |
| (4) | 999 507 768 02 | speed nut<br>4,2 | | 2 | |
| 5 | 996 555 801 01 | loudspeaker grille | | 2 | M 680 |
| | A03 | black | | | |
| (5) | 000 043 206 88 | loudspeaker grille<br>frame<br>leather<br>grille<br>aluminium look | | 2 | M 680/XTR |

| Pos | Part Number | Description | Remark | Qty | Model |
|---|---|---|---|---|---|
| | A10 | black | | | |
| | C50 | graphite grey | | | |
| | S30 | savanna | | | |
| | G10 | metropole blue | | | |
| | J30 | nephrite green | | | |
| | M30 | boxster red | | | |
| | P11 | cinnamon brown | | | |
| | D11 | dark grey/natural | | | |
| | T11 | brown/natural | | | |
| 6 | 999 591 946 02 | clamping washer 5,0 | | 8 | M 680 |
| 7 | 996 645 511 00 | logo | | 2 | M 680 |
| 8 | 996 645 512 00 | clip | | 2 | M 680 |
| 9 | 996 645 561 00 | loudspeaker | /L | 1 | M 680 |
| (9) | 996 645 562 00 | loudspeaker | /R | 1 | M 680 |
| 10 | 996 645 553 00 | frame | | 2 | M 680 |
| 11 | 999 919 086 02 | oval-head screw 4,0 X 14 | | 12 | M 680 |
| 12 | 999 073 061 02 | tapping screw 4,8 X 16 | | 8 | M 680 |
| 13 | 999 591 499 02 | speed nut 4,8 | | 6 | M 680 |
| 14 | 999 507 759 09 | speed nut 4,8 | | 2 | M 680 |
| 15 | 986 645 566 01 | subwoofer | | 1 | M 680 |
| | A10 | black | | | |
| | C50 | graphite grey | | | |
| | S30 | savanna | | | |
| | G10 | metropole blue | | | |
| | J30 | nephrite green | | | |
| | M30 | boxster red | | | |

| Pos | Part Number | Description | Remark | Qty | Model |
|---|---|---|---|---|---|
| | P11 | cinnamon brown | | | |
| | D11 | dark grey/natural | | | |
| | T11 | brown/natural | | | |
| | R10 | cocoa | | | |
| 16 | 986 551 427 00 | rosette | | 1 | M 680 |
| | 01C | satin black | | | |
| 17 | 986 551 429 00 | catch | | 2 | M 680 |
| | 01C | satin black | | | |
| 18 | 986 551 543 00 | thrust washer | | 2 | M 680 |
| | 01C | satin black | | | |
| 19 | 986 551 511 00 | guide rail | 03- | 2 | M 680 |
| | 01C | satin black | | | |

| Model | Year | MG | SG | Illustration | Restrictions | UPD | 18:47 | 30.07.2008 | PORSCHE PET PORSCHE |
|---|---|---|---|---|---|---|---|---|---|
| 986 | 2004 | 9 | 11 | 911-10 | | 229 | | | |

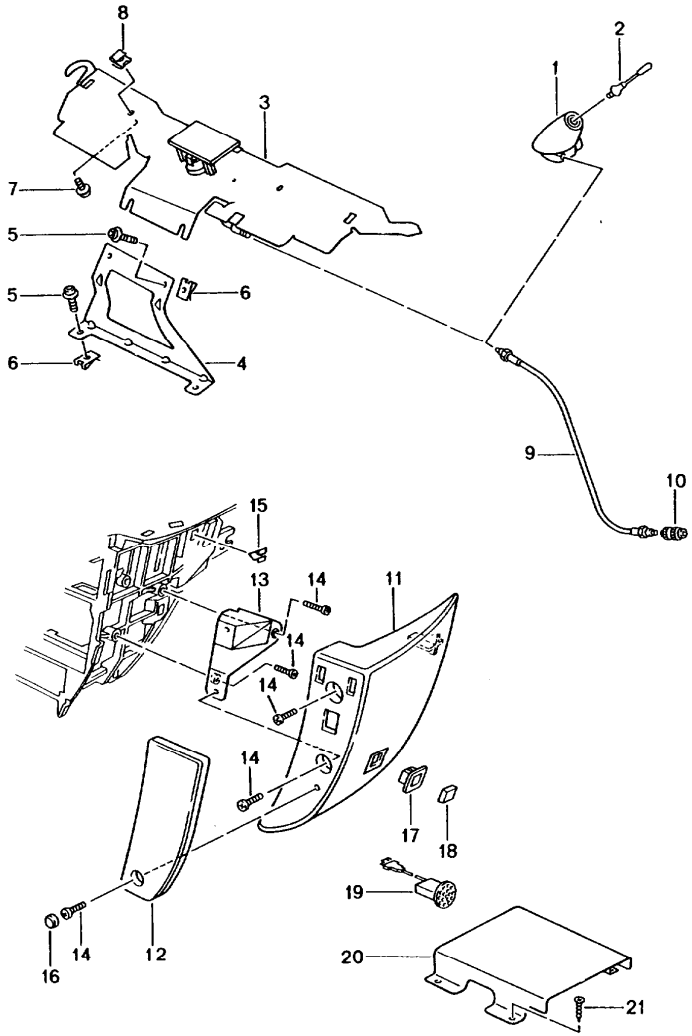


| Pos | Part Number | Description | Remark | Qty | Model |
|---|---|---|---|---|---|
| | | preparation for telephone | | | M 614,M 618 |
| 1 | 996 647 103 00 | antenna base | -00 | 1 | |
| 2 | 996 647 104 00 | antenna rod | -00 | 1 | |
| 3 | 996 647 125 00 | antenna | /LL 01- | 1 | |
| (3) | 996 647 126 00 | antenna | /RL 01- | 1 | |
| 4 | 996 647 127 00 | support<br>POS. 5 + 6<br>attention | /LL -04 | 1 | |
| 4 | 997 647 127 00 | support<br>POS. 5 + 6<br>attention | 04 | 1 | |
| (4) | 996 647 128 00 | support<br>POS. 5 + 6<br>attention | /RL -04 | 1 | |
| (4) | 997 647 128 00 | support<br>POS. 5 + 6<br>attention | /RL 04 | 1 | |
| 5 | 999 073 203 00 | round head screw<br>M 5 X 12 - Z2<br>for<br>support<br>996.647.127/128.00 | -04 | 4 | |
| 5 | 999 073 236 0A | oval-head screw<br>M 6 X 10<br>for<br>support<br>997.647.127/128.00 | 04 | 4 | |
| 6 | 999 507 067 09 | speed nut<br>M 5<br>for<br>support<br>996.647.127/128.00 | -04 | 4 | |
| 6 | 999 507 550 01 | speed nut<br>M 6<br>for<br>support<br>997.647.127/128.00 | 04 | 4 | |
| 7 | 999 073 210 00 | tapping screw<br>4,8 X 13 | 01- | 2 | |
| 8 | 999 507 441 02 | speed nut<br>4,8 | 01- | 2 | |
| 9 | 986 612 096 00 | extension cable | -00 | 1 | |

| Pos | Part Number | Description | Remark | Qty | Model |
|---|---|---|---|---|---|
| 9 | 996 612 037 00 | extension cable | 01- | 1 | M 618 |
| (9) | 996 612 007 00 | extension cable | 03- | 1 | M 666 |
| 10 | 964 646 318 00 | adapter plug | /LL | 1 | |
| (10) | 996 646 318 00 | adapter plug | /RL | 1 | |
| 11 | 996 552 094 00 | bracket leatherette | /LL 97 | 1 | |
| | A10 | black | | | |
| | C50 | graphite grey | | | |
| | S30 | savanna | | | |
| (11) | 996 552 093 00 | bracket leatherette | /RL 97 | 1 | |
| | A10 | black | | | |
| | C50 | graphite grey | | | |
| | S30 | savanna | | | |
| 11 | 996 552 094 02 | bracket leatherette | /LL 98 | 1 | |
| | A18 | black | | | |
| | C18 | graphite grey | | | |
| | S18 | savanna | | | |
| | G18 | metropole blue | | | |
| (11) | 996 552 093 02 | bracket leatherette | /RL 98 | 1 | |
| | A18 | black | | | |
| | C18 | graphite grey | | | |
| | S18 | savanna | | | |
| | G18 | metropole blue | | | |
| 11 | 996 552 094 04 | bracket leatherette | /LL 99- | 1 | |
| | A18 | black | 99 | | |
| | C18 | graphite grey | 99 | | |
| | S18 | savanna | 99 | | |
| | G18 | metropole blue | 99 | | |
| | A12 | black | 00- | | |
| | C52 | graphite grey | 00- | | |
| | S32 | savanna | 00- | | |
| | G12 | metropole blue | 00- | | |
| | J32 | nephrite green | 01- | | |
| (11) | 996 552 093 04 | bracket leatherette | /RL 99- | 1 | |
| | A18 | black | 99 | | |
| | C18 | graphite grey | 99 | | |
| | S18 | savanna | 99 | | |
| | G18 | metropole blue | 99 | | |
| | A12 | black | 00- | | |
| | C52 | graphite grey | 00- | | |
| | S32 | savanna | 00- | | |
| | G12 | metropole blue | 00- | | |
| | J32 | nephrite green | 01- | | |
| 11 | 996 552 094 01 | bracket leather | /LL -98 | 1 | |
| | A11 | black | | | |
| | C51 | graphite grey | | | |
| | S31 | savanna | | | |
| | J31 | nephrite green | | | |
| | M31 | boxster red | | | |
| | G11 | metropole blue | 98 | | |
| (11) | 996 552 093 01 | bracket leather | /RL -98 | 1 | |
| | A11 | black | | | |
| | C51 | graphite grey | | | |
| | S31 | savanna | | | |

| Pos | Part Number | Description | Remark | Qty | Model |
|---|---|---|---|---|---|
| | J31 | nephrite green | | | |
| | M31 | boxster red | | | |
| | G11 | metropole blue | 98 | | |
| 11 | 996 552 094 03 | bracket<br>leather | /LL 99- | 1 | M 012/M 981 |
| | A11 | black | | | |
| | C51 | graphite grey | | | |
| | S31 | savanna | | | |
| | J31 | nephrite green | | | |
| | M31 | boxster red | | | |
| | G11 | metropole blue | | | |
| | D12 | dark grey/natural | 00- | | |
| | T12 | brown/natural | 00- | | |
| | P12 | cinnamon brown | 01- | | |
| | 9V6 | cocoa | 04 | | |
| (11) | 996 552 093 03 | bracket<br>leather | /RL 99- | 1 | M 012/M 981 |
| | A11 | black | | | |
| | C51 | graphite grey | | | |
| | S31 | savanna | | | |
| | J31 | nephrite green | | | |
| | M31 | boxster red | | | |
| | G11 | metropole blue | | | |
| | D12 | dark grey/natural | 00- | | |
| | T12 | brown/natural | 00- | | |
| | P12 | cinnamon brown | 01- | | |
| | 9V6 | cocoa | 04 | | |
| 12 | 996 552 298 00 | attachment | /LL | 1 | |
| | 01C | satin black | | | |
| (12) | 996 552 297 00 | attachment | /RL | 1 | |
| | 01C | satin black | | | |
| 12 | 996 552 979 00 | attachment<br>leather | /LL | 1 | XEA |
| | A11 | black | | | |
| | C51 | graphite grey | | | |
| | S31 | savanna | | | |
| | G11 | metropole blue | | | |
| | J31 | nephrite green | | | |
| | M31 | boxster red | | | |
| | P12 | cinnamon brown | | | |
| | D12 | dark grey/natural | | | |
| | T12 | brown/natural | | | |
| (12) | 996 552 979 01 | attachment<br>leather | /RL | 1 | XEA |
| | A11 | black | | | |
| | C51 | graphite grey | | | |
| | S31 | savanna | | | |
| | G11 | metropole blue | | | |
| | J31 | nephrite green | | | |
| | M31 | boxster red | | | |
| | P12 | cinnamon brown | | | |
| | D12 | dark grey/natural | | | |
| | T12 | brown/natural | | | |
| 13 | A 996 552 624 00 | adapter | 97 | 1 | |
| 13 | 996 552 624 01 | adapter<br>see tpi<br>GR.9 , NR.17 , JAN/99 | 98 | 1 | |
| (13) | 996 552 624 02 | adapter | 99- | 1 | |
| - | 996 552 581 00 | filler piece<br>bracket<br>telephone | /RL 99- | 1 | |
| | 01C | satin black | | | |

| Pos | Part Number | Description | Remark | Qty | Model |
|---|---|---|---|---|---|
| - | 996 552 582 00 | filler piece<br>bracket<br>telephone | /LL 99- | 1 | |
| | 01C | satin black | | | |
| 14 | 999 919 121 09 | oval-head screw<br>5,0 X 16 | | 6 | |
| 15 | 999 507 476 01 | clamp<br>8,0 X 10,2 | | 3 | |
| 16 | 996 552 824 00 | cap | | 1 | |
| | 01C | satin black | | | |
| 16 | 996 552 978 00 | cap<br>leather | | 1 | XEA |
| | A11 | black | | | |
| | C51 | graphite grey | | | |
| | S31 | savanna | | | |
| | G11 | metropole blue | | | |
| | J31 | nephrite green | | | |
| | M31 | boxster red | | | |
| | P12 | cinnamon brown | | | |
| | D12 | dark grey/natural | | | |
| | T12 | brown/natural | | | |
| (17) | 996 646 125 01 | frame | | 1 | |
| 18 | 996 646 126 00 | cover | | 1 | |
| 19 | 996 646 307 00 | microphone | /LL -99 | 1 | |
| | B12 | black-grey | | | |
| (19) | 996 646 308 00 | microphone | /RL -99 | 1 | |
| | B12 | black-grey | | | |
| (19) | 996 646 307 01 | microphone | /LL -01 | 1 | |
| | D05 | granite grey | 99 | | M 010 |
| | C02 | metal grey | 98-99 | | M 012 |
| | C02 | metal grey | -01 | | |

| Pos | Part Number | Description | Remark | Qty | Model |
|---|---|---|---|---|---|
| | A03 | black | -01 | | |
| (19) | 996 646 308 01 | microphone | /RL -01 | 1 | |
| | D05 | granite grey | 99 | | M 010 |
| | C02 | metal grey | 98-99 | | M 012 |
| | C02 | metal grey | -01 | | |
| | A03 | black | -01 | | |
| (19) | 996 646 307 02 | microphone | /LL 02 | 1 | |
| | A03 | black | | | |
| | C02 | metal grey | | | |
| (19) | 996 646 308 02 | microphone | /RL 02 | 1 | |
| | A03 | black | | | |
| | C02 | metal grey | | | |
| 20 | 996 646 235 01 | support | | 1 | M 618 |
| 21 | 999 073 060 02 | tapping screw<br>4,8 X 13 | | 4 | M 618 |
| - | 996 521 663 01 | stop<br>seat rail<br>inner | | 1 | M 437/M 438 |
| - | 996 521 665 00 | stop<br>seat rail<br>inner | | 1 | M 369/M 370<br>M 375/M 376<br>M 540 |

| Model | Year | MG | SG | Illustration | Restrictions | UPD | 18:48 | 30.07.2008 | PET |
|---|---|---|---|---|---|---|---|---|---|
| 986 | 2004 | 9 | 11 | 911-15 | | 229 | | | |

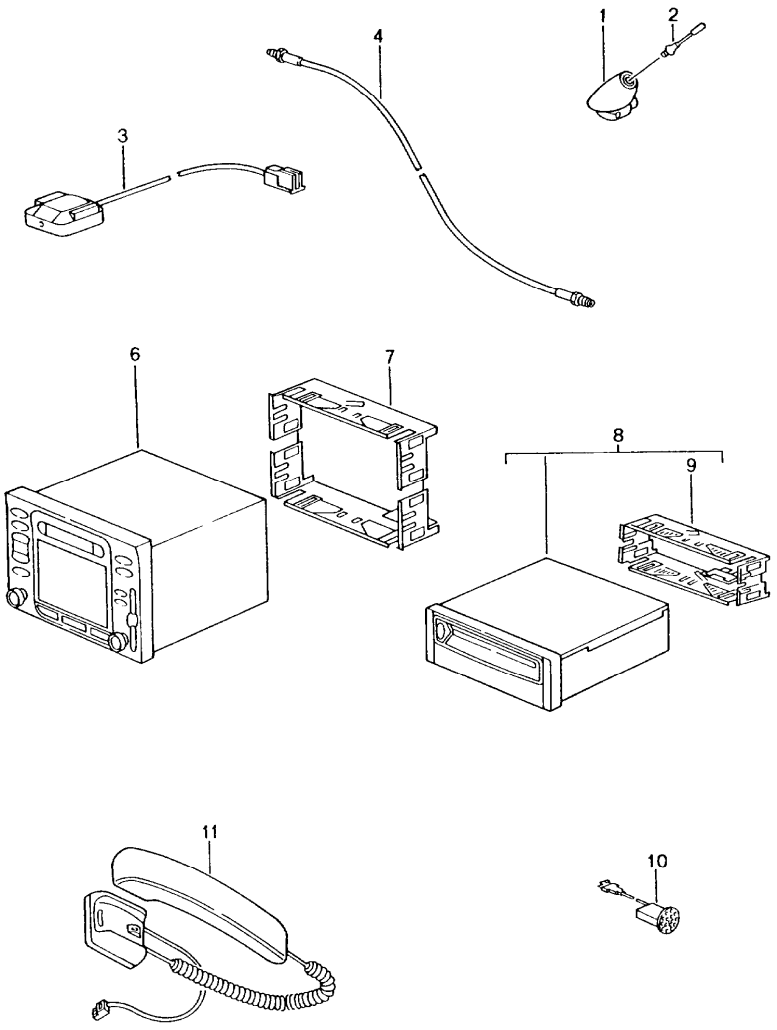


| Pos | Part Number | Description | Remark | Qty | Model |
|---|---|---|---|---|---|
| | | navigation system<br>receiver | -02<br>-02 | | M 662<br>M 663 |
| | | see technical information<br>GR.0 , NR. 8/97 | | | |
| | | tech. information memo<br>GR.9 , NR. 8A/97 | | | |
| | | see technical information<br>GR.9 , NR. 2/02 | | | |
| 1 | 996 647 103 00 | antenna base | -00 | 1 | |
| 2 | 996 647 104 00 | antenna rod | -00 | 1 | |
| | | antenna<br>telephone<br>see group<br>9 /11/10 | 01- | | |
| 3 | 996 642 206 00 | antenna<br>- GPS - | | 1 | |
| 4 | 996 612 083 00 | extension cable<br>telephone | -00 | 1 | |
| 4 | 996 612 038 00 | extension cable<br>telephone | -02 | 1 | |
| (4) | 996 612 970 01 | extension cable<br>- GPS - | | 1 | |
| (6) > | 996 642 904 04 | control part | -01 | 1 | |
| | EFR | gloss black<br>tech. information memo<br>GR.9 , NR. 1A/00 | | | |
| - | 996 642 953 00 | rotary knob | /L -01 | 1 | |
| - | 996 642 954 00 | rotary knob | /R -01 | 1 | |
| (6) > | 996 642 944 00 | control part | 02 | 1 | |
| | EWD | black mat | | | |
| - | 996 642 955 00 | rotary knob | /L 02 | 1 | |
| - | 996 642 956 00 | rotary knob | /R 02 | 1 | |
| 7 | 996 642 103 01 | retaining frame | | 1 | |
| (8) > | 996 642 122 01 | computer | -01 | 1 | |

| Pos | Part Number | Description | Remark | Qty | Model |
|---|---|---|---|---|---|
| | EFR | gloss black<br>F >>981S6 01247<br>F >>981S6 41097<br>F >>981U6 42573 | | | |
| | | cd-rom<br>for<br>computer<br>996.642.122.00.EFR<br>996.642.122.01.EFR | | | |
| - | 996 642 131 06 | cd-rom | | 1 | M 499 |
| - | 996 642 132 06 | cd-rom | | 1 | M 124 |
| - | A 996 642 133 06 | cd-rom | | 1 | M 061 |
| - | 996 642 134 06 | cd-rom | | 1 | M 111/M 277 |
| - | 996 642 135 06 | cd-rom | | 1 | M 063/M 064/<br>M 225 |
| - | 996 642 136 06 | cd-rom | | 1 | M 119 |
| - | 996 642 137 06 | cd-rom | | 1 | M 062 |
| - | 996 642 138 06 | cd-rom | | 1 | M 034 |
| (8) | > 996 642 122 03 | computer | -01 | 1 | |
| | EFR | gloss black<br>F 981S6 01248>><br>F 981S6 41098>><br>F 981U6 42574>> | | | |
| (8) | > 996 642 122 12 | computer | 02 | 1 | |
| | EWD | black mat | | | |
| | | cd-rom<br>for<br>computer<br>996.642.122.03.EFR<br>996.642.122.12.EWD | | | |
| - | 996 642 131 07 | cd-rom | | 1 | M 499 |
| - | 996 642 132 07 | cd-rom<br>replacement<br>see catalogue<br>tequipment | | 1 | M 124 |
| - | 996 642 133 07 | cd-rom | | 1 | M 061 |
| - | 996 642 134 07 | cd-rom | | 1 | M 111/M 277 |
| - | 996 642 135 07 | cd-rom | | 1 | M 063/M 064/<br>M 225 |
| - | 996 642 136 07 | cd-rom | | 1 | M 119 |
| - | 996 642 137 07 | cd-rom | | 1 | M 062 |
| - | 996 642 138 07 | cd-rom | | 1 | M 034 |
| 9 | 993 645 173 00 | retaining frame | | 1 | |
| 10 | 996 646 307 00 | microphone | /LL -99 | 1 | |
| | B12 | black-grey | | | |
| 10 | 996 646 308 00 | microphone | /RL -99 | 1 | |
| | B12 | black-grey | | | |
| 10 | 996 646 307 01 | microphone | /LL -01 | 1 | |
| | D05 | granite grey | 99 | | M 010 |
| | C02 | metal grey | 98-99 | | M 012 |
| | C02 | metal grey | -01 | | |
| | A03 | black | -01 | | |
| (10) | 996 646 308 01 | microphone | /RL -01 | 1 | |
| | D05 | granite grey | 99 | | M 010 |
| | C02 | metal grey | 98-99 | | M 012 |
| | C02 | metal grey | -01 | | |
| | A03 | black | -01 | | |
| (10) | 996 646 307 02 | microphone | /LL 02 | 1 | |
| | A03 | black | | | |
| | C02 | metal grey | | | |
| (10) | 996 646 308 02 | microphone | /RL 02 | 1 | |
| | A03 | black | | | |
| | C02 | metal grey | | | |
| 11 | 996 642 111 01 | receiver | | 1 | M 663 |
| 11 | 996 642 980 00 | receiver<br>leather | | 1 | XEA |
| | A11 | black | | | |

| Pos | Part Number | Description | Remark | Qty | Model |
|---|---|---|---|---|---|
| | C51 | graphite grey | | | |
| | S31 | savanna | | | |
| | G11 | metropole blue | | | |
| | J31 | nephrite green | | | |
| | M31 | boxster red | | | |
| | P12 | cinnamon brown | | | |
| | D12 | dark grey/natural | | | |
| | T12 | brown/natural | | | |
| | | bracket<br>see group<br>9 /11/10 | | | |
| | | stop<br>seat rail<br>see group<br>9 /11/10 | | | |

| Pos | Part Number | Description | Remark | Qty | Model |
|---|---|---|---|---|---|

| KAT. | M-X-I-NR | BENENNUNG-Deutsch<br>DESCRIPTION-English |
|---|---|---|
| 20 | M000 | +----------+<br>! M-Nummern-Uebersicht !<br>+----------+ |
| | | +----------+<br>! Summary of optional extras "M"!<br>+----------+ |
| 20 | M008 | 986 S 3,2 Liter Hubraum<br>986 S 3,2 litres displacement |
| 20 | M009 | 986 2,5 Liter Hubraum -> Mj 1999<br>986 2,5 litres displacement -> mj 1999<br>986 2,7 Liter Hubraum Mj 2000 -><br>986 2,7 litres displacement mj 2000 -> |
| 20 | M010 | Paket "Classic"<br>"Classic" package |
| 20 | M011 | Paket "Trend"<br>"Trend" package |
| 20 | M012 | Paket "Sport Design"<br>"Sport design" package |
| 20 | M013 | Paket "Sport Technik"<br>"Sport technik" package |
| 20 | M016 | Paket "Standard"<br>"Standard" package |
| 20 | M020 | Geschwindigkeitsmesser mit Doppelskala MPH-KM/h<br>Speedometer with two scales mph-km/h |
| 20 | M024 | Griechenland-Ausführung<br>Version for Greece |
| 20 | M030 | Sportfahrwerk<br>Sport-type running gear |
| 20 | M034 | Italien - Ausführung<br>Version for Italy |
| 20 | M058 | Pralldämpfer vorn und hinten<br>Impact absorbers front and rear |
| 20 | M061 | Grossbritannien-Ausführung<br>Version for Great Britain |
| 20 | M062 | Schweden-Ausführung<br>Version for Sweden |
| 20 | M063 | Luxemburg-Ausführung<br>Version Luxemburg |
| 20 | M064 | Niederlande-Ausführung<br>Version for Netherlands |
| 20 | M065 | Dänemark-Ausführung<br>Version for Denmark |
| 20 | M066 | Norwegen-Ausführung<br>Version for Norway |
| 20 | M067 | Finnland-Ausführung<br>Version for Finland |
| 20 | M068 | Thailand-Ausführung<br>Version for Thailand |
| 20 | M069 | Sonstige-länderausführung<br>Other country version |
| 20 | M071 | EU-Länderausführung<br>EU country version |
| 20 | M072 | Mexico-Ausführung<br>Version for Mexico |
| 20 | M073 | Russland-Ausführung<br>Version for Russia |
| 20 | M091 | Sondermodell "50 Jahre Spyder"<br>Special model '50 years spyder' |
| 20 | M111 | Österreich-Ausführung<br>Version for Austria |

| | | |
|---|---|---|
| 20 | M113 | Kanada - Ausführung<br>Version for Canada |
| 20 | M114 | Taiwan - Ausführung<br>Version for Taiwan |
| 20 | M119 | Spanien - Ausführung<br>Version for Spain |
| 20 | M124 | Frankreich - Ausführung<br>Version for France |
| 20 | M126 | Beschriftung französisch<br>Control and indications in french lettering |
| 20 | M127 | Beschriftung schwedisch<br>Control and indications in schwedisch |
| 20 | M130 | Beschriftung englisch<br>Control and indications in english lettering |
| 20 | M139 | Sitzheizung, linker Sitz<br>Seat heating system, left seat |
| 20 | M150 | Betrieb mit verbleitem Kraftstoff<br>Operates with leaded gas |
| 20 | M191 | Felgenstern in sealgrau-metallic<br>Wheel spokes in sealgrey-metallic |
| 20 | M193 | Japan-Ausführung<br>Version for Japan |
| 20 | M197 | Stärkere Batterie<br>Stronger battery |
| 20 | M198 | Starter, 1,7Kw<br>Starter 1,7 kw |
| 20 | M215 | Saudi-Arabien - Ausführung<br>Version for Saudi Arabia |
| 20 | M219 | Ausgleichsgetriebe<br>Differential |
| 20 | M222 | Antriebsschlupfregelung (ASR)<br>Traction control system |
| 20 | M224 | Automatisches Bremsdifferential<br>Automatic limited slip differential |
| 20 | M225 | Belgien-Ausführung<br>Version for Belgium |
| 20 | M249 | Tiptronic-Getriebe<br>Tiptronic transmission |
| 20 | M265 | Automatisch abblendbarer Innenspiegel mit Regensensor<br>Automatic anti-dazzle interior mirror with rain sensor |
| 20 | M266 | Automatisch abblendbarer Aussenspiegel elektrisch verstell- und beheizbar<br>Automatic anti-dazzle exterior mirror |
| 20 | M270 | Aussenspiegel für Fahrerseite -plan-,<br>Outside mirror -plan- driver's side,<br>electricaly adjustable and heatable |
| 20 | M271 | Aussenspiegel für Fahreseite -asphaerisch-,<br>elektrisch verstell- und beheizbar<br>Outside mirror -aspherical- driver's side,<br>electricaly adjustable and heatable |
| 20 | M272 | Aussenspiegel, manuell verstellbar<br>Outside mirror, manually adjustable |
| 20 | M273 | Aussenspiegel, elektrisch verstell- und beheizbar<br>Outside mirror, electrically adjustable and heatable |
| 20 | M274 | Make-up Spiegel beleuchtet<br>Make-up mirror illuminated |
| 20 | M277 | Schweiz-Ausführung<br>Version for switzerland |
| 20 | M288 | Scheinwerfer-Reinigungsanlage<br>Headlamp washer |
| 20 | M320 | Radio "Porsche CR-11", RDW<br>Radio "Porsche CR-11", RDW |
| 20 | M321 | Radio "Porsche CR 22", RDW<br>Radio "Porsche CR 22", RDW |
| 20 | M322 | Radio "Porsche CR 220", USA<br>Radio "Porsche CR 220", USA |

| | | |
|---|---|---|
| 20 | M325 | Südafrika/Neuseeland-Ausführung<br>Version for South Africa/New Zealand |
| 20 | M326 | Radio "Porsche CR-21", RDW<br>Radio "Porsche CR-21", RDW |
| 20 | M327 | Radio "Porsche CR 2200", Japan<br>Radio "Porsche CR 2200", Japan |
| 20 | M329 | Radio "Porsche CR-210", USA<br>Radio "Porsche CR-210", USA |
| 20 | M330 | Radio "Porsche CR-31" , RDW<br>Radio "Porsche CR-31", RDW |
| 20 | M338 | Heck-Antrieb<br>Rear-wheel drive |
| 20 | M340 | Sitzheizung, rechter Sitz<br>Seat heating system, right seat |
| 20 | M342 | Sitzheizung, links u. rechts<br>Seat heating system, left/right seat |
| 20 | M369 | Basissitz links<br>Series seat, left |
| 20 | M370 | Basissitz rechts<br>Series seat, right |
| 20 | M375 | Sportsitz, Lehnenschale, links<br>Sportseat, backrest shell, left |
| 20 | M376 | Sportsitz, Lehnenschale, rechts<br>Sportseat, backrest shell, right |
| 20 | M394 | Boxster-Rad 17"<br>Boxster-wheel 17" |
| 20 | M395 | Gussrad, 16"  (AL)<br>Cast wheel, 16 inches |
| 20 | M396 | Gussrad, 17"  (AL)<br>Cast wheel, 17 inches |
| 20 | M400 | Boxster-S-Rad 17"<br>Boxster-s-wheel 17" |
| 20 | M411 | Carrera-Rad 18" 18"<br>Carrera-wheel |
| 20 | M413 | Turbo-Look-Rad 18"<br>18" turbo-look-wheel |
| 20 | M414 | Turbo-Look-Rad 18" hochglanzoptik<br>18" turbo-look-wheel high gloss finish |
| 20 | M415 | Monobloc-Rad Top 18"<br>18" monobloc wheel top |
| 20 | M421 | Kassettenablage vorn<br>Front cassette compartment |
| 20 | M422 | Kassettenablage hinten<br>Rear cassette compartment |
| 20 | M424 | CD-Ablage<br>CD compartment |
| 20 | M431 | 4-Speichen-Lederlenkrad, Durchmesser 363 mm<br>4-spokes steering wheel (leather), diameter 363 mm |
| 20 | M432 | Lenkrad mit Tiptronic-Bedienung<br>Steering wheel with tiptronic control |
| 20 | M436 | 3-Speichen-Airbaglenkrad<br>3-spoke airbag steering wheel |
| 20 | M437 | Komfortsitz links, elektrisch verstellbar<br>Comfort seat left, electrically adjustable |
| 20 | M438 | Komfortsitz rechts, elektrisch verstellbar<br>Comfort seat right, electrically adjustable |
| 20 | M439 | Elektrische Verdeckbetätigung<br>Electrical Roof catch |
| 20 | M440 | Manuelle Antenne, 4 Lautsprecher --> MJ 2002<br>MJ 2003 --> Antennen-Diversity<br>Manual antenna, 4 loudspeakers --> mj 2002<br>mj 2003 --> antenna diversity |
| 20 | M441 | Radiovorbereitung<br>Prepared for radio |
| 20 | M446 | Radzierdeckel konkav, mit farbigem Wappen<br>Concave hub cape, with coloured escutcheon |
| 20 | M454 | Automatische Geschwindigkeitsregulierung<br>Automatic speed control |

| | | |
|---|---|---|
| 20 | M465 | Nebelschlussleuchte links<br>Rear foglamp, left |
| 20 | M466 | Nebelschlussleuchte rechts<br>Rear foglamp, right |
| 20 | M476 | Porsche Stability Management (PSM)<br>Porsche stability management (PSM) |
| 20 | M479 | Australien - Ausführung<br>Version for Australia |
| 20 | M480 | 6-Gang Schaltgetriebe<br>6-speed manual transmission |
| 20 | M481 | 5-Gang Schaltgetriebe<br>5th-speed manuell transmission |
| 20 | M484 | USA - Ausführung<br>Version for USA |
| 20 | M488 | Beschriftung Deutsch<br>Inscriptions in german language |
| 20 | M490 | Mj 01 Klangpaket<br>Mj 02- Klangpaket Harmann analog<br>Mj 01 sound system<br>Mj 02- sound system Harmann analog |
| 20 | M492 | Scheinwerfer fuer Linksverkehr<br>For left-hand traffic |
| 20 | M499 | Ausführung für die Bundesrepublik Deutschland<br>Version for Germany |
| 20 | M509 | Feuerlöscher<br>Fire extinguisher |
| 20 | M513 | Lordosenstütze rechter Sitz<br>Back-support (lordose) right seat |
| 20 | M524 | Wegfahrsicherung, 433 MHz<br>Anti-drive-off feature, 433 mhz |
| 20 | M525 | Wegfahrsicherung, 315 MHz<br>Anti-drive-off feature, 315 mhz |
| 20 | M531 | Wegfahrsicherung, Zentralverriegelung<br>Anti-drive-off feature, central locking system |
| 20 | M532 | Entfall Fernbedienung Alarmanlage<br>Deleted remote control anti-theft device |
| 20 | M534 | Diebstahlsicherungsanlage<br>Theft security system |
| 20 | M535 | Diebstahlsicherung 315 MHz<br>Anti-theft lock 315 mhz |
| 20 | M536 | Alarmsirene und Neigungsgeber<br>Alarm siren and tilt sensor |
| 20 | M537 | Sitzpositions-Steuerung fÜr Komfortsitz, links<br>Seating position control for confort seat, left |
| 20 | M538 | Sitzpositions-Steuerung für Komfortsitz, rechts<br>Seating position control for confort seat, right |
| 20 | M539 | Mechanische Sitzhöhenverstellung links<br>Mechanical seat-height adjustment left |
| 20 | M540 | Mechanische Sitzhöhenverstellung rechts<br>Mechanical seat-height adjustment right |
| 20 | M549 | Dachtransportsystem<br>Roof rack system |
| 20 | M550 | Hardtop<br>Hardtop |
| 20 | M551 | Windstop<br>Wind deflector |
| 20 | M553 | USA-Canada-Ausführung<br>Version for USA, Canada |
| 20 | M562 | Airbag Fahrer- und Beifahrerseite<br>Airbagdriver's side and front passenger's side |
| 20 | M563 | Seitenairbag<br>Side airbag |
| 20 | M566 | Nebelscheinwerfer weiss<br>Fog-headlamps, white |
| 20 | M567 | Frontscheibe im oberen Bereich stark eingefärbt<br>Windshield tinted, upper part darker coloured |
| 20 | M571 | Aktivkohlefilter<br>Activated charcoal filter |

| | | |
|---|---|---|
| 20 | M573 | Klima-Anlage<br>Air conditioner |
| 20 | M574 | Ohne Klima-Anlage<br>Without air conditioner |
| 20 | M580 | Nichtraucherpaket<br>Non-smoker's package |
| 20 | M581 | Mittelkonsole vorn<br>Center console front |
| 20 | M582 | Ablagetasche (Motordeckel)<br>Storage poket (motor cover) |
| 20 | M584 | Ablagebox<br>Storage box |
| 20 | M586 | Lordosenstütze linker Sitz<br>Back-support (lordose) left seat |
| 20 | M590 | Motorische Deckelverriegelung<br>Power lid locking |
| 20 | M601 | Litronic-Scheinwerfer<br>Headlamp litronic |
| 20 | M602 | Hochgesetzte Bremsleuchte<br>Araised stop lamp |
| 20 | M606 | Tagfahrlicht<br>Daytime running lamp |
| 20 | M614 | Telefonvorbereitung Motorola 2200<br>Preparation of telephone installation motorola 2200 |
| 20 | M618 | Telefonvorbereitung<br>Preparation of telephone installation |
| 20 | M620 | E-Gas<br>E-accelerator |
| 20 | M635 | Einparkhilfe<br>Parking assistent |
| 20 | M651 | Elektrischer Fensterheber<br>Electric window opener |
| 20 | M657 | Servolenkung<br>Power assisted steering |
| 20 | M659 | Bordcomputer<br>Computer |
| 20 | M660 | OBD 2<br>OBD 2 |
| 20 | M661 | Verschärftes Abgaskonzept<br>Stricter emission-control concept |
| 20 | M662 | Info- / Navigationssystem<br>Info/navigation system |
| 20 | M663 | Passivhörer<br>Hands-free receiver |
| 20 | M664 | ORVR<br>ORVR |
| 20 | M665 | PCM2 Grundmodul inclusive Radio PCM2<br>Basic module including radio |
| 20 | M666 | PCM2 Telefon (GSM)<br>PCM2 telephone (GSM) |
| 20 | M668 | PCM2 Telefonbedienhörer<br>PCM2 telephone handset |
| 20 | M670 | PCM2 Navigation<br>PCM2 navigation |
| 20 | M680 | Mj 01 digitales Soundpaket<br>Mj 02- Soundpaket Bose analog<br>Mj 01 digital sound package<br>Mj 02- sound system Bose analog |
| 20 | M686 | Radio "Porsche CDR-21"<br>RDW Radio "Porsche CDR-21" |
| 20 | M688 | Radio "Porsche CDR-210", USA<br>Radio "Porsche CDR-210", USA |
| 20 | M689 | CD-Wechsler Vorbereitung<br>Preperation of cd-changer |
| 20 | M692 | CD-Wechsler "Porsche "<br>CD-changer "Porsche " |
| 20 | M695 | CD-Radio "Porsche CDR 22", RDW<br>CD-Radio "Porsche CDR 22", RDW |

| | | |
|---|---|---|
| 20 | M696 | CD-Radio "Porsche CDR 220", USA<br>CD-Radio "Porsche CDR 220", USA |
| 20 | M698 | CD-Radio "Porsche CDR 32", RDW<br>CD-Radio "Porsche CDR 32", RDW |
| 20 | M699 | MD-Radio "Porsche MDR32", RDW<br>MD-Radio "Porsche MDR32", RDW |
| 20 | M945 | Sitzbezüge vorne,<br>Seat covers front<br>Stoff/Kunstleder/Kunstleder<br>cloth/leatherette/leatherette |
| 20 | M946 | Sitzbezüge vorne, leder/leder/kunstleder<br>Seat covers front, leather/leather/leatherette |
| 20 | M981 | Leder-Ausstattung ohne Sitzbezüge<br>Leather equipment without seat covers |
| 20 | M982 | Sitzbezüge vorne, Raffleder/Leder/Leder<br>Seat covers front, draped leather/leather/leather |
| 20 | M983 | Sitzbezüge vorne, Leder<br>Seat covers front, leather |
| 20 | M990 | Sitzbezüge vorne, Stoff/Stoff/Kunstleder<br>Seat covers front, cloth/cloth/leatherette |
| 20 | M999 | Innenraumüberwachung Sensor<br>für Lederfarbe nach Wahl<br>Passenger compartment monitoring sensor<br>for leather colour of choice |
| 20 | IXAA | Aerokit Cup<br>Aerokit cup |
| 20 | IXAB | Speedster-Heck, Wagenfarbe lackiert<br>Spyder rear in body colour |
| 20 | IXAF | Aerokit Turbo<br>Turbo aerokit |
| 20 | IXAG | Carrera - Heckspoiler<br>Carrera - rear spoiler |
| 20 | IXCG | Sportsitzrückenlehne Alu-Optik<br>Sports seat backrest in Aluminium-Look finish |
| 20 | IXCZ | Schaltwegverkürzung<br>Switch travel shortening |
| 20 | IXD9 | Felgenstern in Wagenfarbe lackiert<br>Wheel painted in body colour |
| 20 | IXE8 | Schaltknopf Alu/Wurzelholz Dunkel/Leder<br>Gear lever knob aluminium/dark burr maple/leather |
| 20 | IXE9 | Handbremshebel Alu/Wurzelholz Dunkel/Leder<br>Handbrake lever aluminium/dark burr maple/leather |
| 20 | IXJB | Mittelkonsole hinten arktissilber<br>Rear section of centre console in arctic silver |
| 20 | IXJ4 | Rosette für Zündschloss lederbezogen<br>Leather cover for ignition lock surround |
| 20 | IXKB | Luftseitendüse Wurzelholz/Ahorn hell<br>Side air vent in light burr maple |
| 20 | IXKC | Luftseitendüse Wurzelholz/Ahorn dunkel<br>Side air vent in dark burr maple |
| 20 | IXKD | Luftseitendüse carbon<br>Side air vent in carbon |
| 20 | IXKE | Luftseitendüse arktissilber<br>Side air vent in arctic silver |
| 20 | IXKG | Defrosterblende Wurzelholz/Ahorn hell, Leder<br>"Windscr. defr. panel in light burr maple; leather" |
| 20 | IXKH | Defrosterblende Wurzelholz/Ahorn dunk, Leder<br>"Windscr. defr. panel in dark burr maple; leather" |
| 20 | IXKJ | Defrosterblende Carbon/Leder<br>Defroster trim in carbon/leather |
| 20 | IXKX | Instr.Abd.Unterteil arktissilber<br>Instrument surround in arctic silver |
| 20 | IXLA | Boxster-Endrohr<br>Boxster tailpipe |
| 20 | IXLF | Sportabgasanlage<br>Sports exhaust system |
| 20 | IXMA | Himmel mit Leder bezogen<br>Rooflining in leather |

| | | |
|---|---|---|
| 20 | IXME | Mittelkonsole hinten lackiert<br>Rear section of centre console painted |
| 20 | IXMF | Mittelkonsole vorn inclusive 2 Ablagen, Leder<br>Front center console incl. 2 storage bins, leather |
| 20 | IXMJ | Mittelkonsole hinten Carbon<br>Rear section of centre console in carbon |
| 20 | IXMK | Überrollbügel in Exterieurfarbe<br>Roll-over bar in exterior color |
| 20 | IXML | Mittelkonsole hinten Wurzelholz Ahorn hell<br>Rear center console in light burr maple |
| 20 | IXMP | Sonnenblende Leder, 2 Make-up-Spiegel beleuchtet<br>Leather sun visor, 2 lit make-up mirrors illuminated |
| 20 | IXMR | Sonnenblende Leder,2 Make-Up-Spiegel beleuchtet Leder<br>Sun visor in leather, 2 illuminated vanity mirrors, |
| 20 | IXMY | Überrollbügel arktissilber<br>Roll-over bar in arctic silver |
| 20 | IXMZ | Mittelkonsole hinten Leder<br>Rear section of centre console in leather |
| 20 | IXNB | Mittelkonsole hinten Wurzelholz Ahorn dunkel<br>Rear center console in dark burr maple |
| 20 | IXNG | Instrumentenabdeckung Unterteil Leder<br>Instrument surround in leather |
| 20 | IXNH | Seitendüse  li./re. Leder Defrosterblende<br>Side vent. left/right defroster trim in leather |
| 20 | IXNN | Mitteldüsenträger in Leder<br>Center air vent bracket in leather |
| 20 | IXNR | Mitteldüsenträger Carbon<br>Carbon center air vent bracket |
| 20 | IXNS | Lenkstock-Verkleidung 4-teilig Leder<br>Leather steering column trim, 4-part |
| 20 | IXNU | Zierleiste (Nut) in Leder<br>Leather trim strip (dashboard) |
| 20 | IXNV | Zierleiste (Nut) Wurzelholz/Ahorn hell<br>Trim strip (dashboard) in light burr maple |
| 20 | IXNW | Zierleiste (Nut) Wurzelholz/Ahorn dunkel<br>Trim strip (dashboard) in dark burr maple |
| 20 | IXNX | Zierleiste (Nut) in Carbon<br>Carbon trim strip (dashboard) |
| 20 | IXNY | Zierleiste (Nut) arktissilber<br>Trim strip in arctic silver |
| 20 | IXN3 | Luftseitendüse Armaturenbrett Leder<br>Dashboard side air vent in leather |
| 20 | IXPA | 3-Speichen Sportlenkrad, Leder Interieurfarbe<br>3-spoke sports steering wheel in leather interior co |
| 20 | IXPB | 3-Speichen Sportlenkrad, Wurzelholz/Ahorn hell, Leder<br>3-spoke sports steering wheel, light burr maple,leather |
| 20 | IXPC | 3-Speichen Sportlenkrad, Wurzelholz/Ahorn dunkel,Leder<br>3-spoke sports steering wheel, dark burr maple,leather |
| 20 | IXPD | 3-Speichen Sportlenkrad, Carbon/Leder<br>3-spoke sports steering wheel, carbon/leather |
| 20 | IXPG | 3-Speichen Sportlenkrad, Sportsilber<br>3-spoke sports steering wheel, sports seats |
| 20 | IXPP | LAUTSPRECHER-ABDECKUNG SCHALTTAFEL INTERIEURFARBE<br>LOUDSPEAKER FINISHER ON SWITCH PANEL IN INTERIOR COLOUR |
| 20 | IXPW | Instrumentenabdeckung Unterteil Wurzelholz/Ahorn Hell<br>Instrument surround in light burr maple |
| 20 | IXPX | Instrumentenabdeckung Unterteil Wurzelholz/Ahorn Dunkel<br>Instrument surround in dark burr maple dark |
| 20 | IXPY | Instrumentenabdeckung Unterteil<br>Carbon  Carbon instrument surround |
| 20 | IXRA | SPORT-CLASSIC-RAD 17"<br>17" SPORTCLASSIC WHEEL |
| 20 | IXRB | Sport-Classic-2 Rad 18" 18"<br>Sport Classic II wheel |
| 20 | IXRC | Sport-Techno Rad 18"<br>18" SportTechno wheel |
| 20 | IXRL | Sport-Design-Rad 18"<br>18" SportDesign wheel |

| | | |
|---|---|---|
| 20 | IXRN | Distanzscheiben 17 mm,hinten<br>17-mm spacers, rear |
| 20 | IXRP | Distanzscheiben 5 mm, vorn/hinten<br>5-mm spacers, front/rear |
| 20 | IXSA | Sportsitzrückenlehne lackiert<br>Painted sports seat backrest |
| 20 | IXSB | Sportsitzrückenlehne in Leder<br>Leather sports seat backrest |
| 20 | IXSC | Porsche Wappen geprägt in Kopfstütze<br>Porsche crest embossed in headrest |
| 20 | IXSD | Sitzbedienelemente in Leder<br>Front seat controls in leather |
| 20 | IXSE | Schalensitz links<br>Bucket seat, left |
| 20 | IXSF | Schalensitz rechts<br>Bucket seat, right |
| 20 | IXSG | Rennschalensitz links<br>Racing bucket seat, left |
| 20 | IXSJ | 6-Punkt-Gurte<br>6-point harness |
| 20 | IXSL | 6-Punkt-Sicherheitsbügel<br>6-point safety catch |
| 20 | IXSM | Rennsport-Sicherheitskäfig<br>Racing safety cage |
| 20 | IXSN | Entfall hintere Sitzanlage<br>Omission of rear seats |
| 20 | IXSR | Schalensitz rechts, Rückseite Carbon<br>Carbon back for bucket seat, right |
| 20 | IXSS | Schalensitz links, Rückseite Carbon<br>Carbon back for bucket seat, left |
| 20 | IXSU | Abgepolsterter Sitz<br>Upholstered seat |
| 20 | IXSW | Sicherheitsgurte in Maritimblau<br>Maritime Blue safety belts |
| 20 | IXSX | Sicherheitsgurte in indischrot<br>Seat belts in guards red |
| 20 | IXSY | Sicherheitsgurte in speedgelb<br>Seat belts in speed yellow |
| 20 | IXTC | TUERTAFELTEILE IN LEDER<br>DOOR FEATURES IN LEATHER |
| 20 | IXTE | TUERTAFELTEILE IN CARBON/LEDER<br>DOOR FEATURES IN CARBON/LEATHER |
| 20 | IXTF | TUERTAFELTEILE ARKTISSILBER/LEDER<br>DOOR FEATURES IN ARCTIC SILVER/LEATHER |
| 20 | IXTG | Schwellerabdeckung innen Leder<br>Inner door sills in leather |
| 20 | IXTJ | Türtafelteile Wurzelholz/Ahorn hell<br>Door panel parts in light burr maple |
| 20 | IXTK | Türtafelteile Wurzelholz/Ahorn dunkel<br>Door panel parts in dark burr maple |
| 20 | IXTL | Türtafelteile Carbon<br>Door features in carbon |
| 20 | IXV1 | Defrosterblende lederbezogen<br>Defroster trim in leather |
| 20 | IXX1 | Fussmatten, Schriftzug, Leder eingefasst<br>Floor mats, logo, leather border |
| 20 | IXX2 | Fussraumbeleuchtung<br>Illuminated footwell |
| 20 | IXY5 | Kulisse Tiptronic-Wählhebel in Leder<br>Tiptronic gear selector gate in leather |
| 20 | IXZD | Abdeckung Innenleuchte in Leder<br>Interior light surround in leather |
| 20 | IX45 | Instrumenten-Zifferblatt lackiert in Interieurfarbe<br>Instrument dial in interior color |
| 20 | IX46 | Tiptronic-Wählhebel in Alu/Leder<br>Tiptronic selector lever in aluminium/leather |
| 20 | IX65 | Tiptronic-Wählhebel Wurzelholz Hell/Alu<br>Tiptr. sel. lever in light burr maple/aluminium |

| | | |
|---|---|---|
| 20 | IX66 | Tiptronic-Wählhebel Wurzelholz Dunkel/Alu<br>Tiptr. sel. lever in dark burr maple/aluminium |
| 20 | IX69 | Einstiegsblenden Carbon, Schriftzug<br>Door entry guards in carbon with logo |
| 20 | IX70 | Einstiegsblenden Edelstahl, Schriftzug<br>Door entry guards in stainless steel with logo |
| 20 | IX71 | Instrumenten-Zifferblatt Lackiert/Alufarbe<br>Instrument dial painted/Aluminium-Look finish |
| 20 | IX72 | Schaltknopf Alu/Wurzelholz Hell/Leder<br>Gear lever knob aluminium/light burr maple/leather |
| 20 | IX73 | Sportfahrwerk Turbo<br>Turbo sports suspension |
| 20 | IX74 | Sportfahrwerk (exclusiv)<br>Sports suspension (exclusive) |
| 20 | IX76 | Schwellerverkleidungen links/rechts<br>Inner door sill guard left/right |
| 20 | IX91 | Handbremshebel Alu/Wurzelholz Hell/Leder<br>Handbrake lever aluminium/light burr maple/leather |
| 20 | IX99 | Naturleder<br>Natural leather |

| Model | Year | MG | SG | Illustration | VIN No. | Update | | 16:45 | 12.08.2008 |
|---|---|---|---|---|---|---|---|---|---|
| 986 | 04 | | | | | 230 | | | |

EQUIPMENT BY COUNTRY REGULATIONS

==========

(A) AUSTRIA

(AG) ARABIAN GULF STATES

(AUS) AUSTRALIA

(B) BELGIUM

(BR) BRAZIL

(CDN) CANADA

(CH) SWITZERLAND

(D) FEDERAL REPUBLIC OF GERMANY

(DK) DENMARK

(E) SPAIN

(F) FRANCE

(GB) GREAT BRITAIN

(GR) GREECE

(HK) HONGKONG

(I) ITALY

| | |
|---|---|
| (J) | JAPAN |
| (L) | LUXEMBURG |
| (N) | NORWAY |
| (NL) | NETHERLANDS |
| (NZ) | NEW ZEALAND |
| (P) | PORTUGAL |
| (RC) | TAIWAN |
| (S) | SWEDEN |
| (SA) | SAUDI ARABIA |
| (SF) | FINLAND |
| (USA) | UNITED STATES OF AMERICA |
| (ZA) | SOUTH AFRICA |

| Model | Year | MG | SG | Illustration | VIN No. | Update | | 16:45 | 12.08.2008 |
|---|---|---|---|---|---|---|---|---|---|
| 986 | 04 | | | | | 230 | | | |

IN COLUMN - A -

---

IDENTIFICATION LETTER FOR PERIOD OF INSTALLATION
THAT IS REPEATED SEVERAL TIMES IN THE CATALOG GROUP.

EXPLANATION PLEASE FIND IN TEXT COLUMN OF THE CATALOG GROUP

IN COLUMN - QU - = NO. OF PIECES

---

| | |
|---|---|
| 1 | NUMBER PER APPLICATION |
| X | NUMBER AS NEEDED |
| * | AVAILABLE ONLY IN RUNNING LENGTHS 1 = 1 METRE |

IN COLUMN - MODEL/SYMBOL -

---

| | |
|---|---|
| M650 | OPTIONAL EQUIPMENT - SEE M-NO. LIST |
| -97 | LIMITATION OF MODEL YEAR FOR INSTANCE: VALID UP TO END OF MODEL YEAR 1997 |
| /LL | LHD |
| /RL | RHD |

---+

| | |
|---|---|
| /V | FRONT I |

| Model | Year | MG | SG | Illustration | VIN No. | Update | | 16:45 | 12.08.2008 |
|---|---|---|---|---|---|---|---|---|---|
| 986 | 04 | | | | | 230 | | | |

```
                        I
/H          REAR        I
                        I---> APPLIES TO
/L          LEFT        I     DIRECTION OF TRAVEL
                        I
/R          RIGHT       I
            ---------+

WW          THE PART CAN BE USED INSTEAD OF THE
            PRECEDING ONE.
```

| Model | Year | MG | SG | Illustration | VIN No. | Update | | 16:44 | 12.08.2008 |
|---|---|---|---|---|---|---|---|---|---|
| 986 | 04 | | | | | 230 | | | |

LEGENDS AND NOTICES

==========

IN COLUMN -S- STATUS

---

| | |
|---|---|
| N | NEW ADDITION |
| P | PART ALREADY IN PROGRAMME, BUT NEW AT THIS APPLICATION |
| W | DELETED AT THIS APPLICATION, BUT CONTINUED TO BE CARRIED |
| A | STOCK TO BE USED UP |
| U | DELETED WITHOUT REPLACEMENT |
| * | PART ALSO OR ONLY AVAILABLE IN REPAIR KIT |
| > | ALSO AVAILABLE IN EXCHANGE |

IN COLUMN - ILL. -

---

| | |
|---|---|
| 1 | IDENTIFICATION NO. IN ILLUSTRATION |
| (1) | PART ONLY SIMILAR AS ILLUSTRATED |
| - | PART IS NOT ILLUSTRATED |

| Model | Year | MG | SG | Illustration | VIN No. | Update | | 16:44 | 12.08.2008 |
|---|---|---|---|---|---|---|---|---|---|
| 986 | 04 | | | | | 230 | | | |

FIG.-NUMBERS FOR WHICH THERE IS SHOWN NO TEXT ARE
NOT VALID FOR THIS EDITION OF CATALOGUE

IN COLUMN -PART NUMBER/CODE-
---

000 000 000 00 PART NUMBER EQUALS ORDERING NO., IF A CODE IS SHOWN, IT WILL HAVE TO BE PART OF ORDERING NUMBER

01C COLOUR CODE

IN COLUMN -TEXT
---

INSTALLATION WITH ENGINE OR CHASSIS NUMBER-RANGE

EXAMPLE:

M 65V 00389>> FROM ENGINE NO.

F >>98VS6 00889 UP TO CHASSIS NO.

| Model | Year | MG | SG | Illustration | VIN No. | Update | | 16:44 | 12.08.2008 |
|---|---|---|---|---|---|---|---|---|---|
| 986 | 04 | | | | | 230 | | | |

| VEHICLE TYPE | TYPE | MY | TRANSMISSION NO. | TECNICAL DATA |
|---|---|---|---|---|
| BOXSTER | G86.00 | 97 V | G8600 1 002001>999999 | 5-GANG |
| BOXSTER TIPTRONIC | A86.00 | 97 V | A8601 1 002001>999999 | 5-GANG |
| BOXSTER | G86.00 | 98 W | G8600 1 002001>999999 | 5-GANG |
| BOXSTER TIPTRONIC | A86.00 | 98 W | A8602 1 002001>999999 | 5-GANG |
| BOXSTER | G86.00 | 99 X | G8600 1 002001>999999 | 5-GANG |
| BOXSTER TIPTRONIC | A86.00 | 99 X | A8603 1 002001>999999 | 5-GANG |
| BOXSTER | G86.01 | 00 Y | G8601 1 002001>999999 | 5-GANG |
| BOXSTER TIPTRONIC | A86.05 | 00 Y | A8605 1 002001>999999 | 5-GANG |
| BOXSTER "S" | G86.20 | 00 Y | G8620 2 002001>999999 | 6-GANG |
| BOXSTER "S" TIPTRONIC | A86.20 | 00 Y | A8620 1 002001>999999 | 5-GANG |
| BOXSTER | G86.01 | 01 1 | G8601 1 002001>999999 | 5-GANG |
| BOXSTER TIPTRONIC | A86.05 | 01 1 | A8605 1 002001>999999 | 5-GANG |
| BOXSTER "S" | G86.20 | 01 1 | G8620 1 002001>999999 | 6-GANG |
| BOXSTER "S" TIPTRONIC | A86.20 | 01 1 | A8620 1 002001>999999 | 5-GANG |
| BOXSTER | G86.01 | 02 2 | G8601 1 002001>999999 | 5-GANG |
| BOXSTER TIPTRONIC | A86.05 | 02 2 | A8605 1 002001>999999 | 5-GANG |
| BOXSTER "S" | G86.20 | 02 2 | G8620 1 002001>999999 | 6-GANG |
| BOXSTER "S" TIPTRONIC | A86.20 | 02 2 | A8620 1 002001>999999 | 5-GANG |
| BOXSTER | G86.01 | 03 3 | G8601 1 002001>999999 | 5-GANG |
| BOXSTER TIPTRONIC | A86.05 | 03 3 | A8605 1 002001>999999 | 5-GANG |
| BOXSTER "S" | G86.20 | 03 3 | G8620 1 002001>999999 | 6-GANG |
| BOXSTER "S" TIPTRONIC | A86.20 | 03 3 | A8620 1 002001>999999 | 5-GANG |
| BOXSTER | G86.01 | 04 4 | G8601 1 002001>999999 | 5-GANG |

PORSCHE

# V-Pages

PORSCHE

| Model | Year | MG | SG | Illustration | VIN No. | Update | | 16:44 | 12.08.2008 |
|---|---|---|---|---|---|---|---|---|---|
| 986 | 04 | | | | | 230 | | | |

```
BOXSTER  TIPTRONIC        A86.05  04 4 A8605 1 002001>999999 5-GANG
BOXSTER "S"               G86.20  04 4 G8620 1 002001>999999 6-GANG
BOXSTER "S" TIPTRONIC     A86.20  04 4 A8620 1 002001>999999 5-GANG
```

| Model | Year | MG | SG | Illustration | VIN No. | Update | | 16:44 | 12.08.2008 |
|---|---|---|---|---|---|---|---|---|---|
| 986 | 04 | | | | | 230 | | | |

EXPLANATION OF THE TRANSMISSION-NUMBERS USED IN THE CATALOGUE

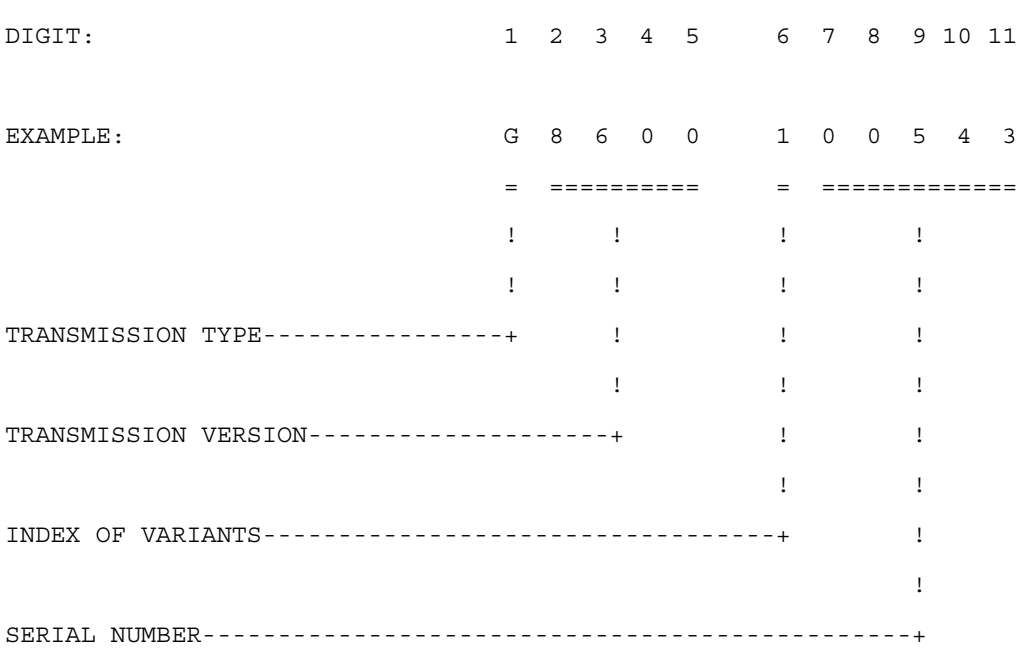

PORSCHE

# V-Pages

PORSCHE

| Model | Year | MG | SG | Illustration | VIN No. | Update | | 16:44 | 12.08.2008 |
|---|---|---|---|---|---|---|---|---|---|
| 986 | 04 | | | | | 230 | | | |

| VEHICLE TYPE | ENGINE TYPE | MY | ENGINE NO. | TECHNICAL DATA |
|---|---|---|---|---|
| BOXSTER | M96.20 | 97 V | 65V 00501>60000 | 6ZYL/2,5L /150 KW |
| BOXSTER | M96.20 | 98 W | 65W 00501>60000 | 6ZYL/2,5L /150 KW |
| BOXSTER | M96.20 | 99 X | 65X 00501>60000 | 6ZYL/2,5L /150 KW |
| BOXSTER | M96.22 | 00 Y | 65Y 00501>60000 | 6ZYL/2,7L /160 KW |
| BOXSTER"S" | M96.21 | 00 Y | 67Y 00501>60000 | 6ZYL/3,2L /185 KW |
| BOXSTER | M96.22 | 01 1 | 651 00501>60000 | 6ZYL/2,7L /162 KW |
| BOXSTER"S" | M96.21 | 01 1 | 671 00501>60000 | 6ZYL/3,2L /185 KW |
| BOXSTER | M96.22 | 02 2 | 652 00501>60000 | 6ZYL/2,7L /162 KW |
| BOXSTER"S" | M96.21 | 02 2 | 672 00501>60000 | 6ZYL/3,2L /185 KW |
| BOXSTER | M96.23 | 03 3 | 653 00501>60000 | 6ZYL/2,7L /168 KW |
| BOXSTER"S" | M96.24 | 03 3 | 673 00501>60000 | 6ZYL/3,2L /191 KW |
| BOXSTER | M96.23 | 04 4 | 654 00501>60000 | 6ZYL/2,7L /168 KW |
| BOXSTER"S" | M96.24 | 04 4 | 674 00501>60000 | 6ZYL/3,2L /191 KW |

| Model | Year | MG | SG | Illustration | VIN No. | Update | | 16:44 | 12.08.2008 |
|---|---|---|---|---|---|---|---|---|---|
| 986 | 04 | | | | | 230 | | | |

EXPLANATION OF THE MOTOR-NUMBERS USED IN THE CATALOGUE

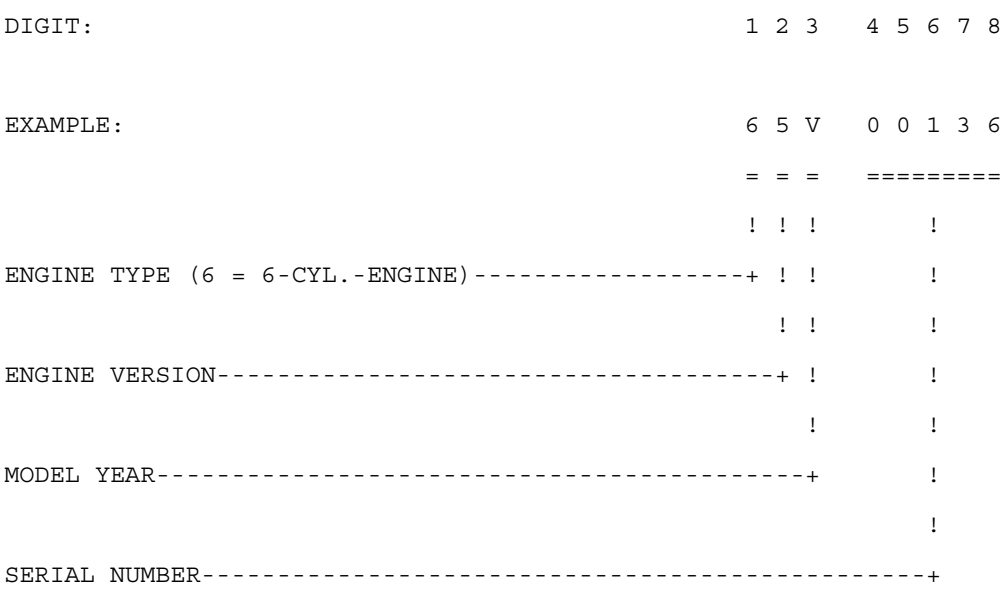

PORSCHE

# V-Pages

PORSCHE

| Model | Year | MG | SG | Illustration | VIN No. | Update | | 16:44 | 12.08.2008 |
|---|---|---|---|---|---|---|---|---|---|
| 986 | 04 | | | | | 230 | | | |

| VEHICLE TYPE | MY | VIN | ENGINE TYPE | |
|---|---|---|---|---|
| BOXSTER | 04 4 | 984S6 00061>10000 | M96.23 | 168 KW |
| BOXSTER | 04 4 | 984U6 00061>10000 | M96.23 | 168 KW |
| BOXSTER (USA)(CDN)(MEX)(BR) | 04 4 | 984S6 20061>30000 | M96.23 | 168 KW |
| BOXSTER (USA)(CDN)(MEX)(BR) | 04 4 | 984U6 20061>30000 | M96.23 | 168 KW |
| BOXSTER "S" | 04 4 | 984S6 40061>50000 | M96.24 | 191 KW |
| BOXSTER "S" | 04 4 | 984U6 40061>50000 | M96.24 | 191 KW |
| BOXSTER "S" (USA.CDN.MEX.BR) | 04 4 | 984S6 60061>70000 | M96.24 | 191 KW |
| BOXSTER "S" (USA.CDN.MEX.BR) | 04 4 | 984U6 60061>70000 | M96.24 | 191 KW |

PORSCHE

# V-Pages

PORSCHE

| Model | Year | MG | SG | Illustration | VIN No. | Update | | 16:44 | 12.08.2008 |
|---|---|---|---|---|---|---|---|---|---|
| 986 | 04 | | | | | 230 | | | |

| VEHICLE TYPE | MY | VIN | ENGINE TYPE | |
|---|---|---|---|---|
| BOXSTER | 97 V | 98VS6 00061>10000 | M96.20 | 150 KW |
| BOXSTER (USA)(CDN) | 97 V | 98VS6 20061>30000 | M96.20 | 150 KW |
| BOXSTER (BR) | 97 V | 98TS6 29801>30000 | M96.20 | 150 KW |
| BOXSTER (BR) | 97 V | 98VS6 29801>30000 | M96.20 | 150 KW |
| BOXSTER | 98 W | 98WS6 00061>10000 | M96.20 | 150 KW |
| BOXSTER | 98 W | 98WU6 00061>10000 | M96.20 | 150 KW |
| BOXSTER (USA)(CDN)(MEX) | 98 W | 98WS6 20061>30000 | M96.20 | 150 KW |
| BOXSTER (USA)(CDN) | 98 W | 98WU6 20061>30000 | M96.20 | 150 KW |
| BOXSTER (BR) | 98 W | 98WS6 29801>30000 | M96.20 | 150 KW |
| BOXSTER (BR) | 98 W | 98WU6 29801>30000 | M96.20 | 150 KW |
| BOXSTER | 99 X | 98XS6 00061>10000 | M96.20 | 150 KW |
| BOXSTER | 99 X | 98XU6 00061>10000 | M96.20 | 150 KW |
| BOXSTER (USA)(CDN)(MEX) | 99 X | 98XS6 20061>30000 | M96.20 | 150 KW |
| BOXSTER (USA)(CDN)(MEX) | 99 X | 98XU6 20061>30000 | M96.20 | 150 KW |
| BOXSTER (BR) | 99 X | 98XS6 29801>30000 | M96.20 | 150 KW |
| BOXSTER (BR) | 99 X | 98XU6 29801>30000 | M96.20 | 150 KW |
| BOXSTER | 00 Y | 98YS6 00061>10000 | M96.22 | 160 KW |
| BOXSTER | 00 Y | 98YU6 00061>10000 | M96.22 | 160 KW |
| BOXSTER (USA)(CDN)(MEX)(BR) | 00 Y | 98YS6 20061>30000 | M96.22 | 160 KW |
| BOXSTER (USA)(CDN)(MEX)(BR) | 00 Y | 98YU6 20061>30000 | M96.22 | 160 KW |
| BOXSTER "S" | 00 Y | 98YS6 40061>50000 | M96.21 | 185 KW |
| BOXSTER "S" | 00 Y | 98YU6 40061>50000 | M96.21 | 185 KW |
| BOXSTER "S" (USA.CDN.MEX.BR) | 00 Y | 98YS6 60061>70000 | M96.21 | 185 KW |
| BOXSTER "S" (USA.CDN.MEX.BR) | 00 Y | 98YU6 60061>70000 | M96.21 | 185 KW |
| BOXSTER | 01 1 | 981S6 00061>10000 | M96.22 | 162 KW |
| BOXSTER | 01 1 | 981U6 00061>10000 | M96.22 | 162 KW |

PORSCHE

# V-Pages

PORSCHE

| Model | Year | MG | SG | Illustration | VIN No. | Update | | 16:44 | 12.08.2008 |
|---|---|---|---|---|---|---|---|---|---|
| 986 | 04 | | | | | 230 | | | |

```
BOXSTER (USA)(CDN)(MEX)(BR)     01 1 981S6 20061>30000 M96.22     162 KW
BOXSTER (USA)(CDN)(MEX)(BR)     01 1 981U6 20061>30000 M96.22     162 KW

BOXSTER "S"                     01 1 981S6 40061>50000 M96.21     185 KW
BOXSTER "S"                     01 1 981U6 40061>50000 M96.21     185 KW
BOXSTER "S" (USA.CDN.MEX.BR)    01 1 981S6 60061>70000 M96.21     185 KW
BOXSTER "S" (USA.CDN.MEX.BR)    01 1 981U6 60061>70000 M96.21     185 KW

BOXSTER                         02 2 982S6 00061>10000 M96.22     162 KW
BOXSTER                         02 2 982U6 00061>10000 M96.22     162 KW
BOXSTER (USA)(CDN)(MEX)(BR)     02 2 982S6 20061>30000 M96.22     162 KW
BOXSTER (USA)(CDN)(MEX)(BR)     02 2 982U6 20061>30000 M96.22     162 KW

BOXSTER "S"                     02 2 982S6 40061>50000 M96.21     185 KW
BOXSTER "S"                     02 2 982U6 40061>50000 M96.21     185 KW
BOXSTER "S" (USA.CDN.MEX.BR)    02 2 982S6 60061>70000 M96.21     185 KW
BOXSTER "S" (USA.CDN.MEX.BR)    02 2 982U6 60061>70000 M96.21     185 KW

BOXSTER                         03 3 983S6 00061>10000 M96.23     168 KW
BOXSTER                         03 3 983U6 00061>10000 M96.23     168 KW
BOXSTER (USA)(CDN)(MEX)(BR)     03 3 983S6 20061>30000 M96.23     168 KW
BOXSTER (USA)(CDN)(MEX)(BR)     03 3 983U6 20061>30000 M96.23     168 KW

BOXSTER "S"                     03 3 983S6 40061>50000 M96.24     191 KW
BOXSTER "S"                     03 3 983U6 40061>50000 M96.24     191 KW
BOXSTER "S" (USA.CDN.MEX.BR)    03 3 983S6 60061>70000 M96.24     191 KW
BOXSTER "S" (USA.CDN.MEX.BR)    03 3 983U6 60061>70000 M96.24     191 KW
```

| Model | Year | MG | SG | Illustration | VIN No. | Update | | 16:44 | 12.08.2008 |
|---|---|---|---|---|---|---|---|---|---|
| 986 | 04 | | | | | 230 | | | |

EXPLANATION OF THE ABRIDGED VERSION OF THE VEHICLE IDENT. NUMBERS (VIN)

USED IN THE CATALOGUE

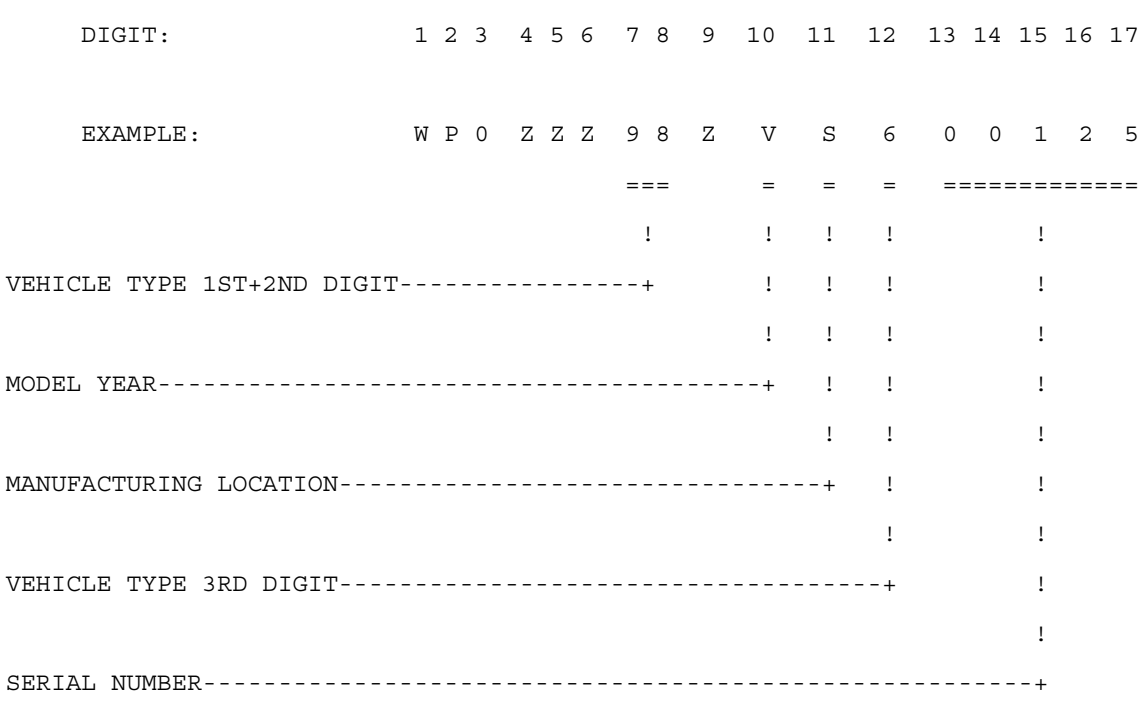

| Model | Year | MG | SG | Illustration | VIN No. | Update | | 16:43 | 12.08.2008 |
|---|---|---|---|---|---|---|---|---|---|
| 986 | 04 | | | | | 230 | | | |

THIS PARTS CATALOGUE CONTAINS ALL ORDER INFORMATION OF
TYPE BOXSTER FROM MODEL YEAR 1997

IT IS AVAILABLE IN TWO EDITIONS IN THE FOLLOWING LANGUAGES:

EDITION
USA, CANADA - *

EDITION
ALL OTHER COUNTRIES - GERMAN

* - ENGLISH

- FRENCH

- ITALIAN

- SPANISH

UPDATING IS BEING PERFORMED BY CHANGING OF UPDATE.

THE EDITION CAN BE RECOGNIZED BY THE CURRENT NO.
IN THE BOTTOM LINE OF SUBJECT UPDATE.

THE PREVIOUS UPDATE SHOULD NO LONGER BE USED.

ALL ILLUSTRATIONS ARE SUBJECT TO CHANGE WITHOUT OBLIGATION.

| Model | Year | MG | SG | Illustration | VIN No. | Update | | 16:43 | 12.08.2008 |
|---|---|---|---|---|---|---|---|---|---|
| 986 | 04 | | | | | 230 | | | |

THE SEATS FOR EACH MODEL ARE AVAILABLE IN THE PARTS CATALOGUE "SEATS (STZ 19)".